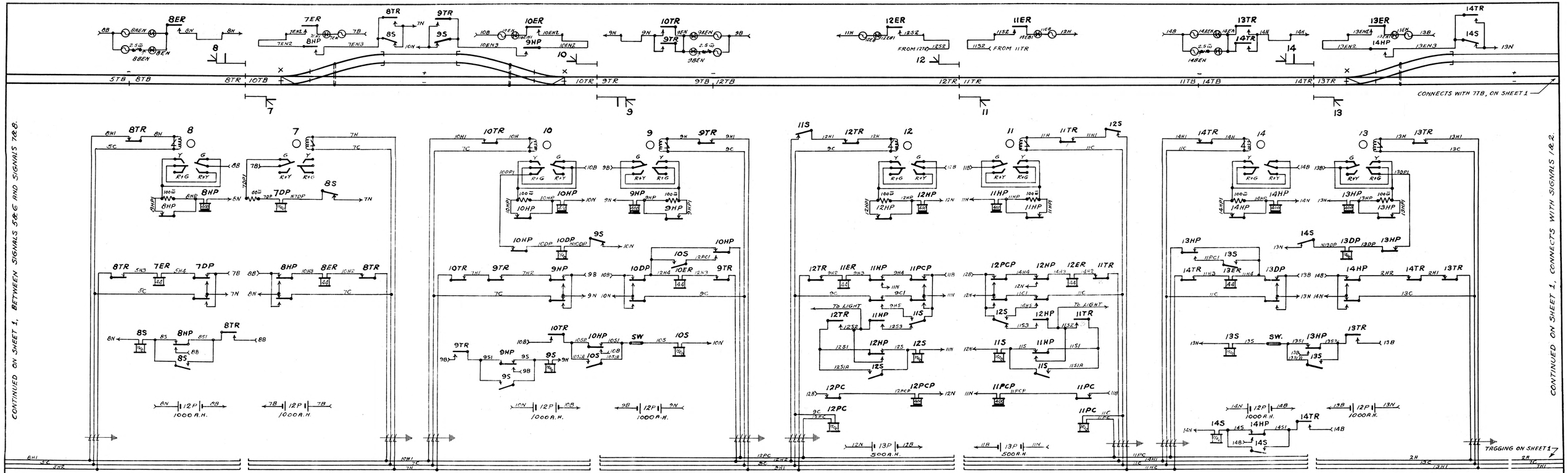

FROM L.A. BOX TO SIG. 7

7C 15P	8H1 8C, 2H2 10H1, 7C 1H, 5P
3C 05P	N7DP 7N, 7EN2

FROM SIG. 7 TO SIG. 8

7C 15P	8H1 8C, 2H2 11H3, 10H1 7C, 5P
3C 05P	N7DP 7N, 7EN2

FROM L.A. BOX TO SIG. 9

9C 25P	10H1 10C, 1H 1N, 12PC 9C, 3H1 5P, 6C

FROM SIG. 9 TO SIG. 10

9C 05P	10H1 10C, 3H1 1N, APH 1N, 9EN1 12PC, 12P 12N3, 9C
3C 05P	N10DP 10N, 10EN2

FROM SIG. 10 TO SW.

1C 05P	10S #9
1C 05P	10S1 #9

FROM L.A. BOX TO SIG. 11

9C 15P	12H2 12C, 3C 12PC, 9H1 11H2, 11PC 11C, 5P 14H1

FROM SIG. 11 TO SIG. 12

9C 05P	12H1 9C, 5P 9H2, 12N3 11N, 12PC 11H1, 11H3 11C, 11C 11H2, 12N 14H3, 5P 3P, 6P
7C 35P	

FROM L.A. BOX TO SIG. 13

9C 25P	11H2 11PC, 11C2 14H1, 2H 13C, 13H1 5P, 6P

FROM SIG. 13 TO SIG. 14

9C 15P	14H1 11C, 11H2 11H3, 2H1 5P, 3C 14EN, 14PN1 N13DP, 13N 13N3
3C 05P	

FROM SIG. 13 TO SW.

1C 05P	13S #9
1C 05P	13S1 #9

NOTES :-

THIS SCHEME TO BE USED WHERE THERE IS ONLY ONE INTERMEDIATE LOCATION. FOR TWO, OR MORE, LOCATIONS SEE SHEET 1.

GENERAL INFORMATION SHOWN ON SHEET 1, ALSO APPLIES TO THIS SHEET.

A. C. L. RR.

TYPICAL CIRCUITS FOR A.P.B. SIGNALING WITH SEARCHLIGHT SIGNALS

Supt. Signals Office — Wilmington, N. C.

Approved C. F. Holloway, Supt. Signals

Drawn E. J. S. JULY 9, 1930 — Scale — Traced

E-1120

Revisions

Lt. Ckt. Revised Jan. 10, 1933.	
YORK RELAYS MADE QUICK ACTING. FEB. 20, 1931.	
ALL RES. UNITS NOW 100Ω. CONTACT SHUNT ADDED TO H.P. RELAYS. MARCH 2, 1931.	
THERMAL RELAYS REMOVED FEB. 20, 1931	
CHANGE IN STICK CONTROL AND HEAD LIGHT LIGHTING CIRCUITS. DEC. 5, 1930.	
ENTRANCE SIGNAL D.P. RELAYS REVISED TO W.P.R.S. LETTER OF OCT. 27, 1930.	
CONTROL OF 7TH KEY AS NOTED ON SHEET 1. REV. OF THIS DATE. OCT. 20, 1930.	
POSITION OF ONE WIRE ON TWO SIGNALS TO NO. AND TO A.B. CHANGED. NO CHANGE IN CIRCUITS. AUG. 29, 1930.	
KEY TICKET CHANGE IN CONTROL OF SIG. 1 AT SIG. 9. FERRIS & CO. LETTER OF AUG. 6, 1930.	
KEY TO SHOW 13C & 2C AT BATTERY AT ALL LOCATIONS. AUG. 4, 1930.	
KEY RECORDING TO HONED AND LETTER FROM U.S. R.S. CO. OF 7/30/30. JULY 21, 1930.	
KEY ACCT. CHANGE IN LIGHTING CIRCUITS OF SIGNALS 11 AND 12. JULY 10, 1930.	

SHEET 2 OF 4 SHEETS