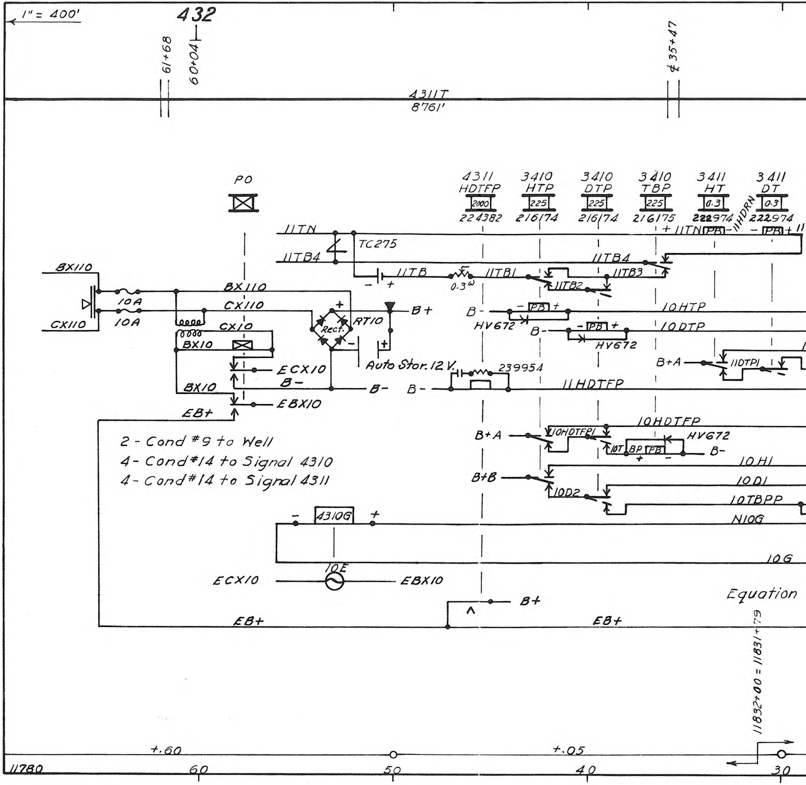
1" = 400'
432
61+68
60+04
℄ 35+47
4311T
8761'
PO
4311 HDTFP 2000 224382
3410 HTP 225 216174
3410 DTP 225 216174
3410 TBP 225 216175
3411 HT 0.3 222974
3411 DT 0.3 222974
11HDRN
11TN
11TB4
TC275
11TB
0.3ω
11TB1
11TB2
11TB3
PB
BX110
CX110
10A
10A
CX10
BX10
Rect.
RT10
B+
B-
Auto Stor. 12 V.
ECX10
EBX10
EB+
239954
11HDTFP
HV672
10HTP
10DTP
B+A
11DTP1
10HDTFP
10HDTFP1
10T BP
B+B
10D2
10H1
10D1
10TBPP
N10G
4310G
10G
10E
Equation
11832+00 = 11831+79
+.60
+.05
11780
60
50
40
30

2 - Cond #9 to Well
4 - Cond #14 to Signal 4310
4 - Cond #14 to Signal 4311

149-1-19
6 Shts Sh2

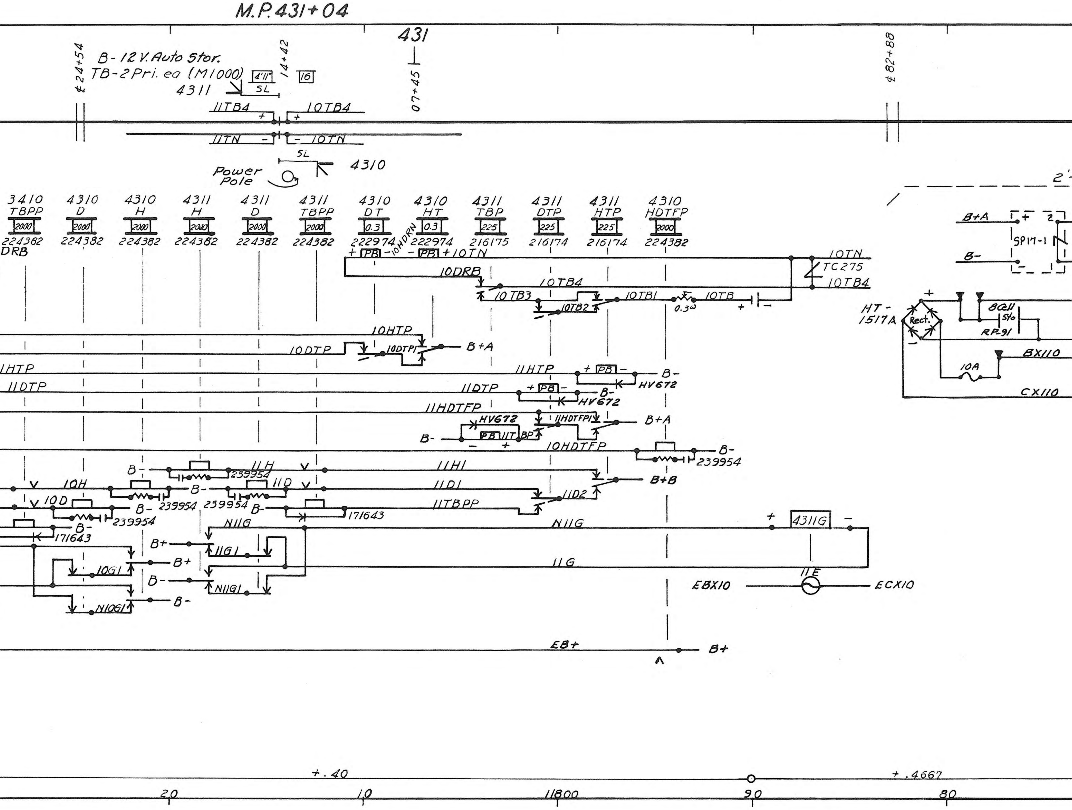
M.P. 431+04
431
¢ 24+54
B-12 V. Auto Stor.
TB-2 Pri. ea (M1000)
4'11"
14+42
16
4311
SL
11TB4
10TB4
11TN
10TN
SL
4310
07+45
¢ 82+88
Power Pole
3410 TBPP 2000 224362 DRB
4310 D 2000 224382
4310 H 2000 224382
4311 H 2000 224382
4311 D 2000 224382
4311 TBPP 2000 224382
4310 DT 0.3 222974
4310 HT 0.3 222974
4311 TBP 225 216175
4311 DTP 225 216174
4311 HTP 225 216174
4310 HDTFP 2000 224382
+ PB - 10HDRN - PB + 10TN
10DRB
10TB4
10TB3
10TB2
10TB1
0.3ω
10TB
10TN
TC275
10TB4
10HTP
10DTP
10DTP1
B+A
11HTP
11DTP
11HDTFP
+ PB -
B-
HV672
11HDTFP1
HV672
PB 11T BP
B-
10HDTFP
239954
11H
11H1
11D
11D1
11D2
B+B
10H
10D
239954
171643
11TBPP
N11G
4311G
B+
11G1
10G1
N11G1
N10G1
11G
11E
EBX10
ECX10
EB+
B+
B+A
B-
SP17-1
HT-1517A
Rect.
8 Cell S/o
RP-91
BX110
10A
CX110
2'
+.40
+.4667
20
10
11800
90
80

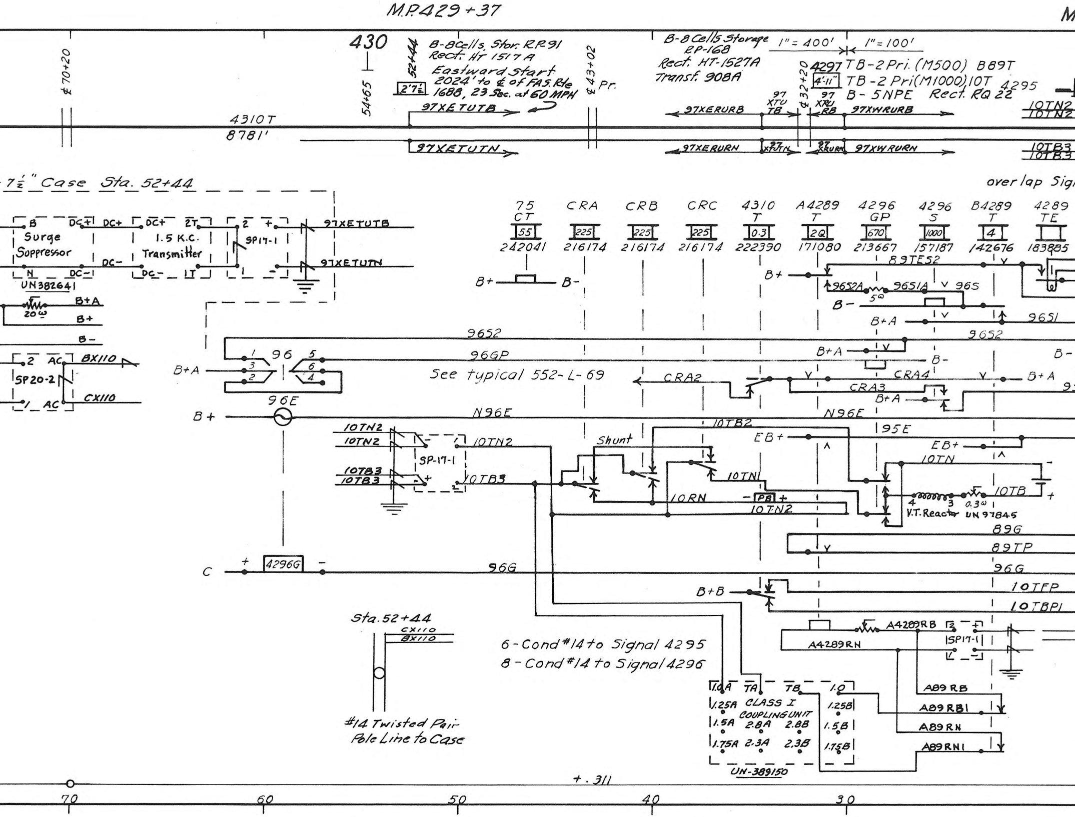
M.P.429+37
430
¢70+20
54+65
52+44
2'7½"
B-8 Cells, Stor. RR91
Rect. Hr 1517A
Eastward Start
2024' to ¢ of FAS. Rte 1688, 23 Sec. at 60 MPH
97XETUTB
¢43+02
Pr.
4310T
8781'
97XETUTN
B-8 Cells Storage
RP-168
Rect. HT-1527A
Transf. 908A
1" = 400'
1" = 100'
4297 TB-2 Pri. (M500) B89T
4'11" TB-2 Pri(M1000) 10T 4295
B-5NPE Rect. RQ 22
¢32+20
97XERURB
97 XTU TB
97 XRU RB
97XWRURB
97XERURN
97 XTUN
97 XRUN
97XWRURN
10TN2
10TB3
7½" Case Sta. 52+44
over lap Sig
B
DC+
Surge Suppressor
N
DC-
UN382641
1.5 K.C. Transmitter
2T
1T
SP17-1
97XETUTB
97XETUTN
20ω
B+A
B+
B-
2 AC
SP20-2
1 AC
BX110
CX110
75 CT 55 242041
CRA 225 216174
CRB 225 216174
CRC 225 216174
4310 T 0.3 222390
A4289 T 2Q 171080
4296 GP 670 213667
4296 S 1000 157187
B4289 T 4 142676
4289 TE 183885
B+
B-
89TES2
9652A
9651A
5ω
965
9651
9652
96GP
96
B+A
See typical 552-L-69
CRA2
CRA4
CRA3
96E
N96E
B+
10TB2
95E
EB+
10TN2
10TB3
SP-17-1
Shunt
10TN1
10RN
PB
10TN2
10TN
10TB
4
3
0.3ω
V.T. Reactor UN 97845
89G
89TP
96G
C
4296G
B+B
10TFP
10TBP1
A4289RB
A4289RN
SP17-1
Sta. 52+44
CX110
BX110
#14 Twisted Pair Pole Line to Case
6-Cond #14 to Signal 4295
8-Cond #14 to Signal 4296
1.0A TA TB 1.0
1.25A CLASS I COUPLING UNIT 1.25B
1.5A 2.8A 2.8B 1.5B
1.75A 2.3A 2.3B 1.75B
UN-389150
A89 RB
A89 RB1
A89 RN
A89 RN1
+.311
70
60
50
40
30

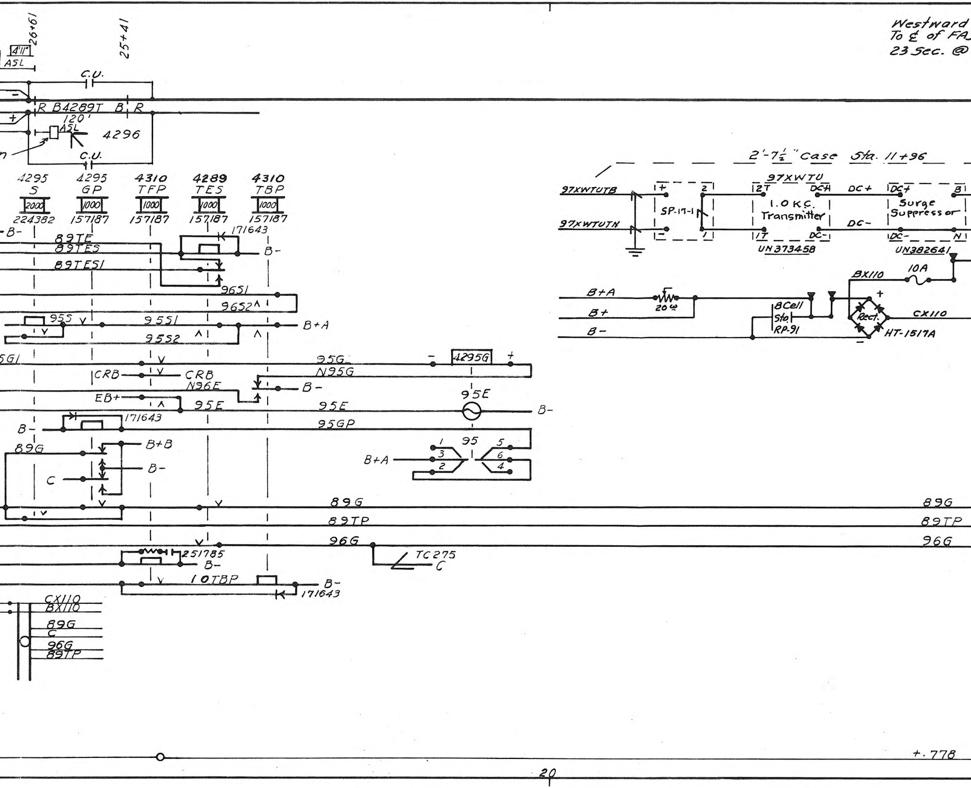
Westward
To ℄ of FA
23 Sec. @
26+61
25+41
4'11"
ASL
C.U.
R B4289T B R
120'
ASL
4296
C.U.
4295 S 2000 224382
4295 GP 1000 157187
4310 TFP 1000 157187
4289 TES 1000 157187
4310 TBP 1000 157187
171643
B-
89TE
89TES
89TES1
B-
9651
9652
955
9551
9552
B+A
5G1
95G
N95G
4295G
CRB
CRB
N96E
B-
EB+
95E
95E
95E
B-
B-
171643
95GP
B+B
89G
B-
C
1 95 5
3 6
2 4
B+A
89G
89TP
96G
251785
B-
TC275
C
10TBP
B-
171643
CX110
BX110
89G
C
96G
89TP
2'-7½" Case Sta. 11+96
97XWTUTB
97XWTUTN
SP-17-1
+ 2
- 1
97XWTU
2T DC+
1.0 KC. Transmitter
1T DC-
UN373458
DC+
DC-
DC+ B
Surge Suppressor
DC- N
UN382641
BX110
10A
B+A
20Ω
B+
B-
8 Cell Sto. RP-91
Rect.
HT-1517A
CX110
89G
89TP
96G
+.778

M.P. 429+07

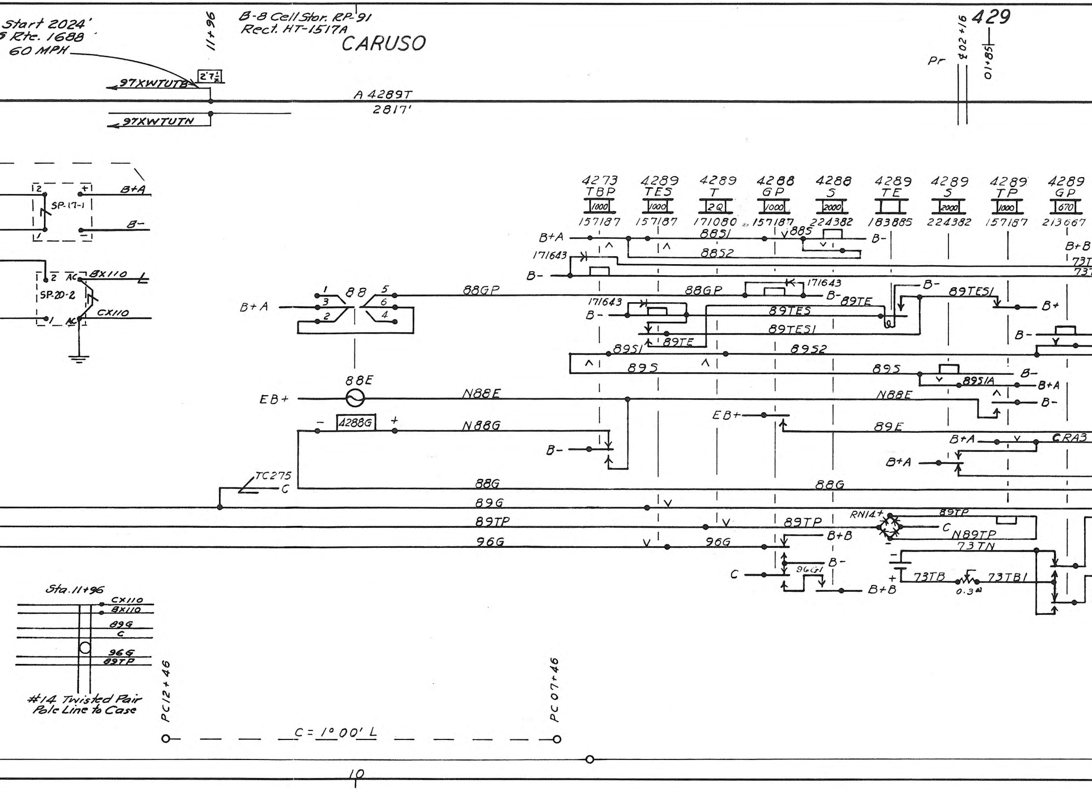

Start 2024'
Rte. 1688
60 MPH
11+96
B-8 Cell Stor. RP-91
Rect. HT-1517A
CARUSO
429
Pr
02+16
01+85
97XWTUTB
2'7½
A 4289T
2817'
97XWTUTN
B+A
SP-17-1
B-
SP-20-2
BX110
CX110
1
2
3
4
5
6
88
88GP
B+A
4273 TBP 1000 157187
4289 TES 1000 157187
4289 T 2Q 171080
4288 GP 1000 157187
4288 S 2000 224382
4289 TE 183885
4289 S 2000 224382
4289 TP 1000 157187
4289 GP 670 213667
8851
885
8852
171643
89TE
89TES
89TES1
89S1
89S2
89S
89S1A
CRA3
73T
88E
EB+
N88E
4288G
N88G
89E
TC275
C
88G
89G
89TP
96G
RN14
N89TP
73TN
73TB
73TB1
0.3Ω
96G1
B+B
Sta. 11+96
#14 Twisted Pair
Pole Line to Case
PC 12+46
PC 07+46
C = 1° 00' L
10

M.P.428+34

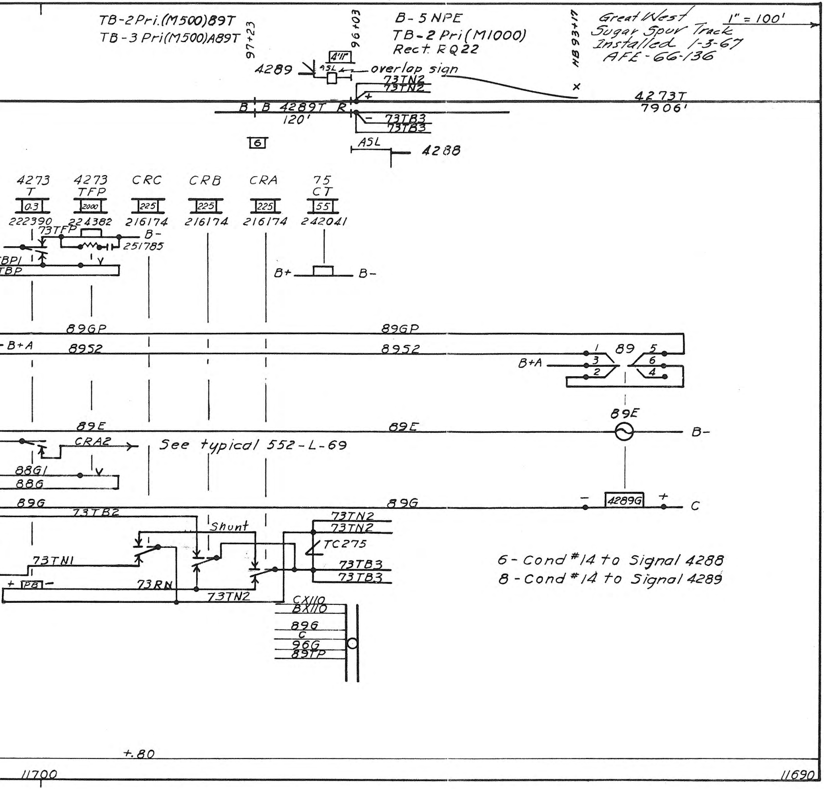
TB-2Pri.(M500)89T
TB-3 Pri(M500)A89T
97+23
96+03
B-5 NPE
TB-2 Pri(M1000)
Rect. RQ22
HB 93+17
Great West Sugar Spur Track Installed 1-3-67 AFE-66-136
1" = 100'
4289
4'11"
ASL
overlap sign
73TN2
73TN2
4273T
7906'
B
B 4289T
R
120'
73TB3
73TB3
6
ASL
4288
4273 T
0.3
222390
4273 TFP
2000
224382
CRC
225
216174
CRB
225
216174
CRA
225
216174
75 CT
55
242041
73TFP
B-
251785
TBP1
TBP
B+
B-
89GP
89GP
B+A
8952
8952
89
1
2
3
4
5
6
B+A
89E
89E
89E
B-
CRA2
See typical 552-L-69
88G1
88G
89G
89G
4289G
C
73TB2
Shunt
73TN2
73TN2
TC275
73TB3
73TB3
73TN1
PB
73RN
73TN2
CX110
BX110
89G
C
96G
89TP
+.80
11700
11690

6-Cond #14 to Signal 4288
8-Cond #14 to Signal 4289

~~6-26-46~~
~~1-12-48~~
~~9-17-68~~
1-20-71

149-1-19
65hts Sh2