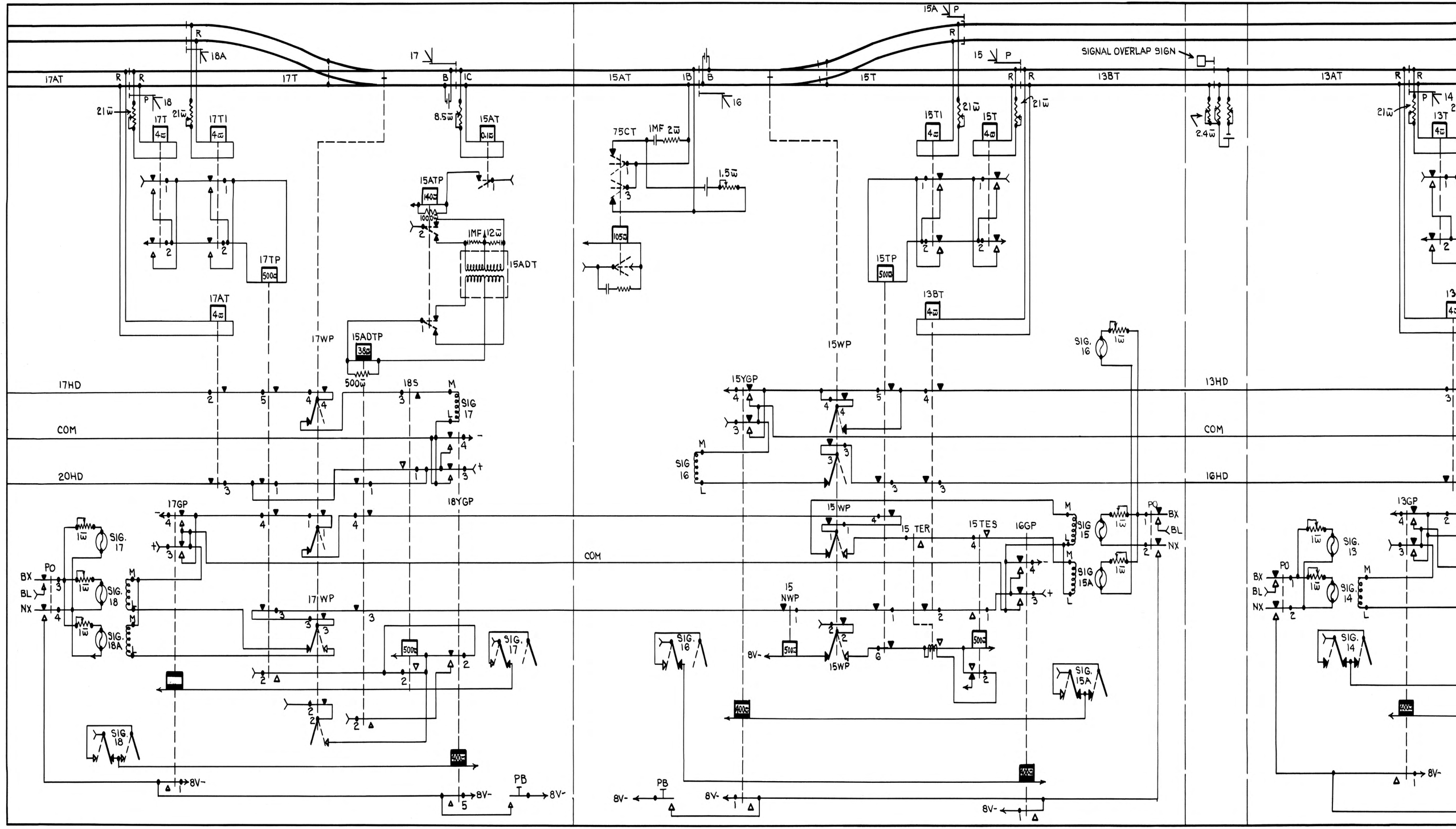
17AT
17T
15AT
15T
13BT
13AT
SIGNAL OVERLAP SIGN
17HD
COM
20HD
18YGP
17GP
15YGP
16GP
13HD
16HD
13GP
17WP
15WP
15 NWP
15 TER
15 TES
SIG. 17
SIG. 18
SIG. 18A
SIG. 16
SIG. 15
SIG. 15A
SIG. 13
SIG. 14
8V-
PB
BX
BL
NX
PO

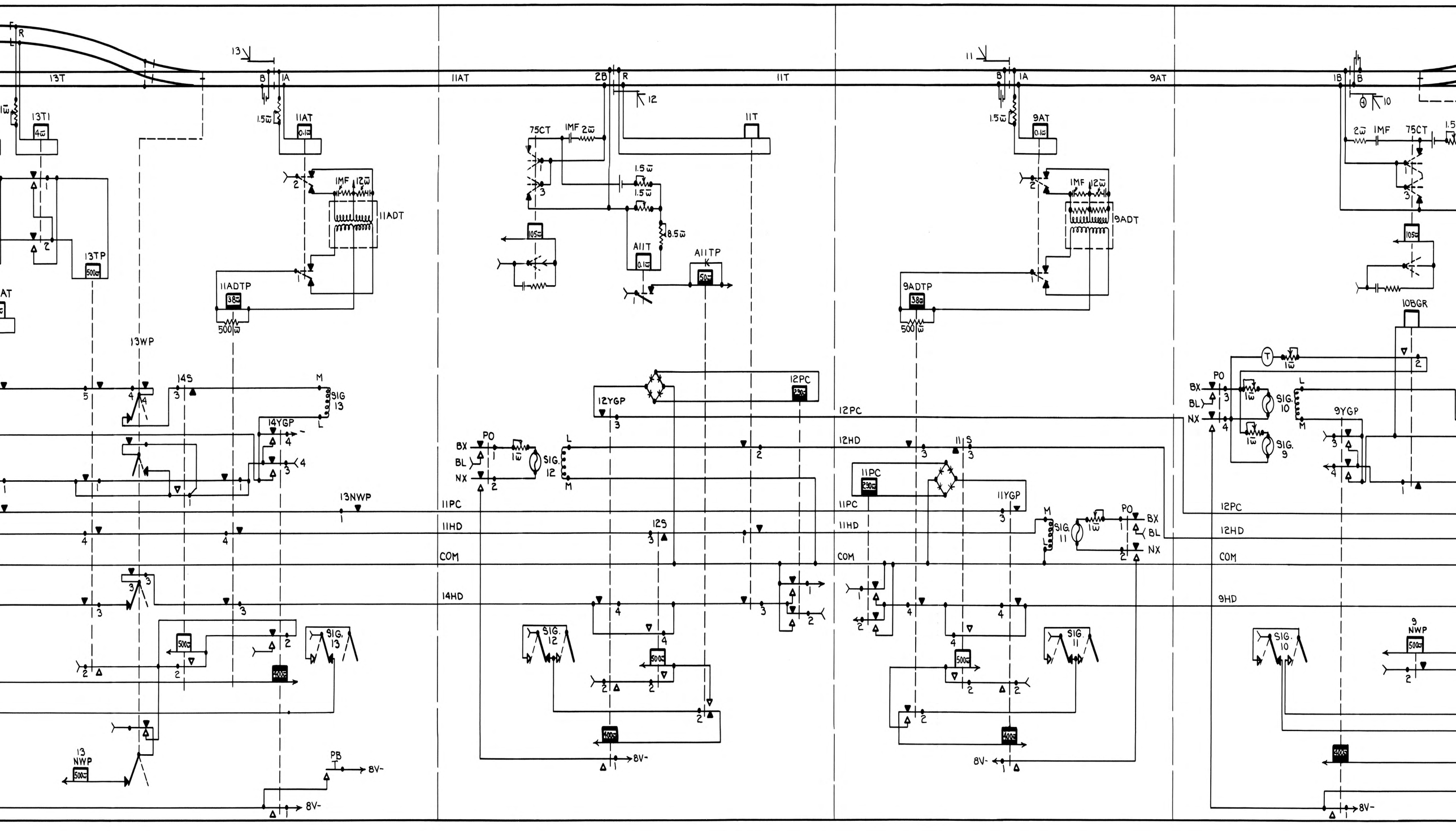
13T
11AT
11T
9AT
13T1
13TP
11ADT
11ADTP
11IT
11ITP
9ADT
9ADTP
10BGR
9YGP
14S
14YGP
13WP
13NWP
12YGP
12PC
12S
11PC
11YGP
11HD
COM
14HD
12HD
9HD
9NWP
SIG. 13
SIG. 12
SIG. 11
SIG. 10
SIG. 9
PB
8V-

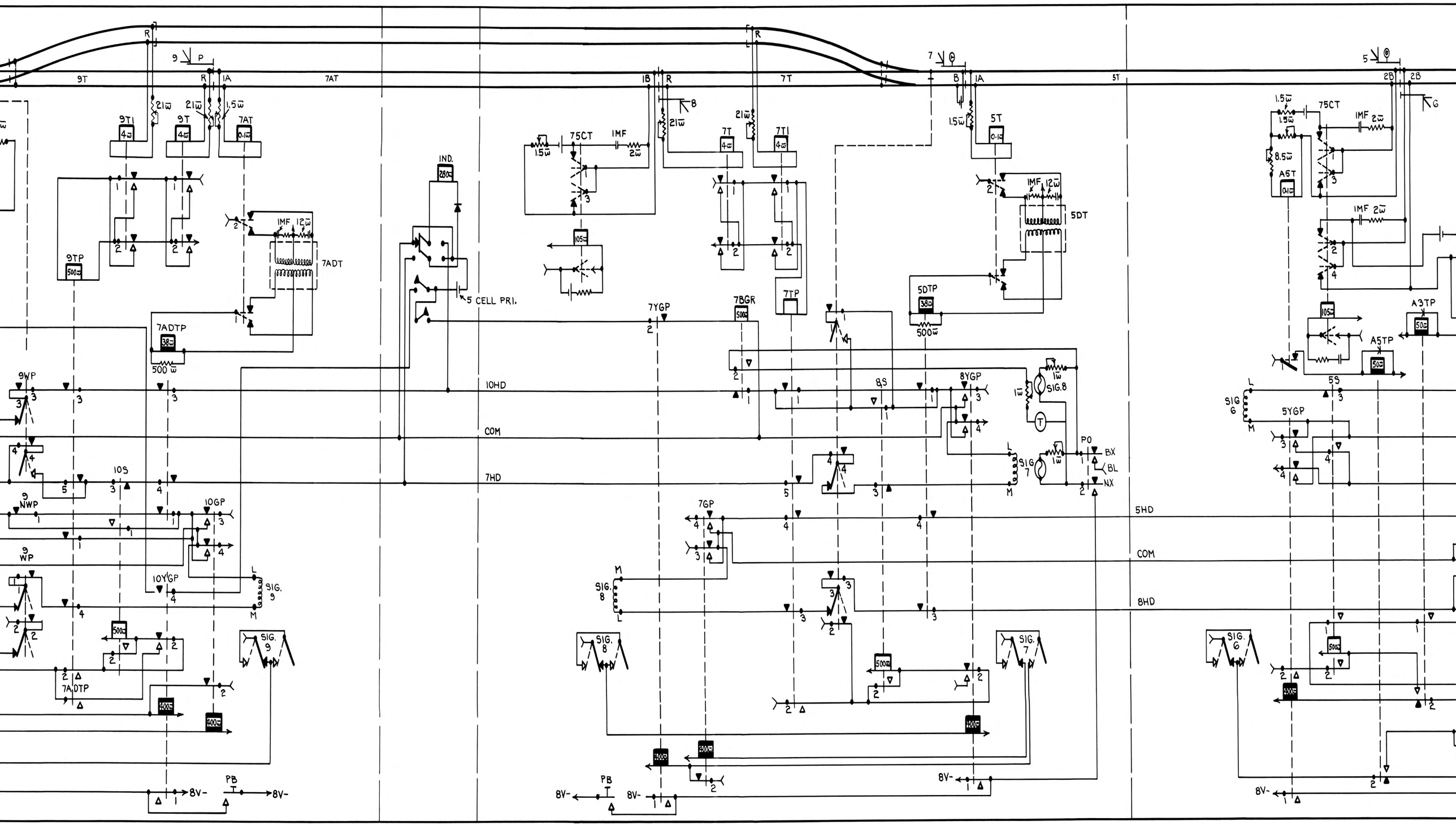
9T
7AT
7T
5T
9T1
9T
7AT
21ω
21ω
1.5ω
4ω
0.1ω
9TP
500ω
1MF 12ω
7ADT
7ADTP
38ω
500 ω
IND.
280ω
5 CELL PRI.
75CT
1MF
2ω
1.5ω
105ω
7T
7T1
7YGP
7BGR
7TP
5T
5DT
5DTP
500ω
9WP
10HD
COM
7HD
10S
9NWP
10GP
9WP
10YGP
SIG. 9
7ADTP
400ω
8S
8YGP
SIG.8
SIG 7
PO
BX
BL
NX
7GP
SIG. 8
SIG. 7
5HD
COM
8HD
8V-
PB
1.5ω
75CT
1MF 2ω
8.5ω
A5T
0.1ω
A3TP
50ω
A5TP
5S
SIG 6
5YGP
SIG. 6

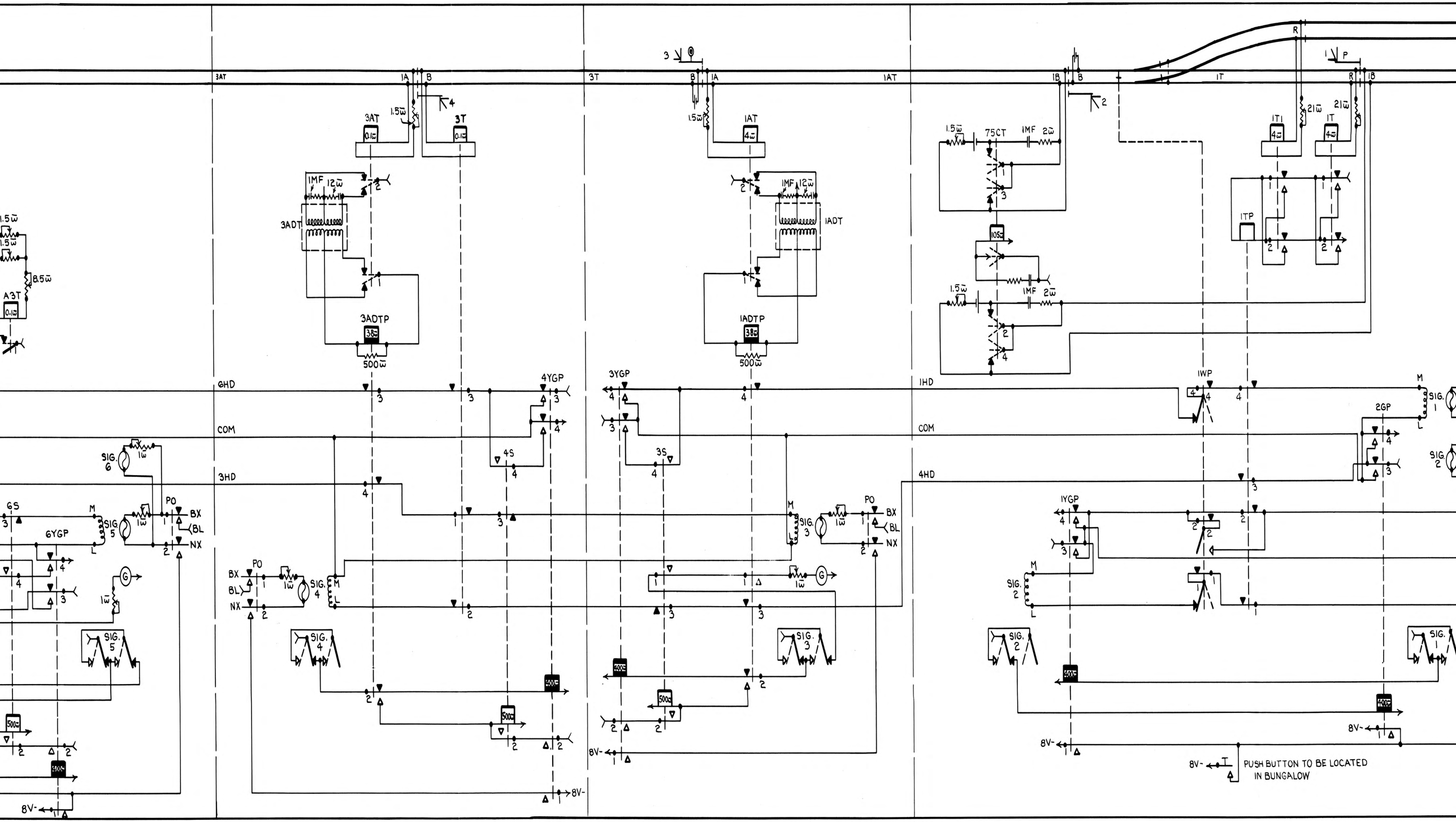
3AT
3T
1AT
1T
6HD
COM
3HD
1HD
4HD
4YGP
3YGP
1YGP
2GP
6YGP
GS
A3T
3ADT
3ADTP
1ADT
1ADTP
1T1
1TP
1WP
75CT
105Ω
1MF
2Ω
12Ω
21Ω
4Ω
0.1Ω
1.5Ω
8.5Ω
500Ω
3Ω
1Ω
4S
3S
SIG. 1
SIG. 2
SIG. 3
SIG. 4
SIG. 5
SIG. 6
PO
BX
BL
NX
8V-
PUSH BUTTON TO BE LOCATED IN BUNGALOW

DENVER AND SALT LAKE R.R.

TYPICAL CIRCUIT FOR A.P.B. LINE CONTROL, SA SIGNALS AND CODED TRACKS

DATE	
1-15-42	
4-30-42	

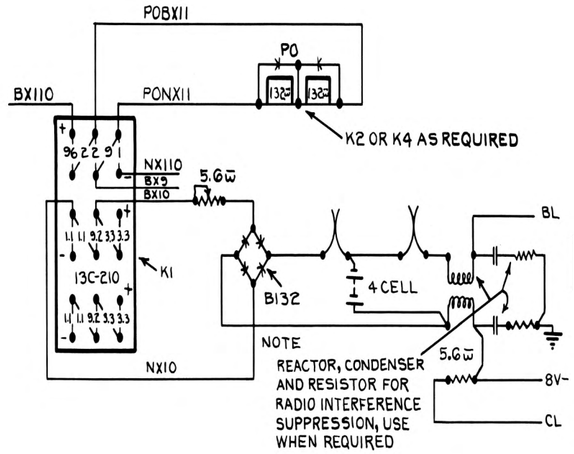

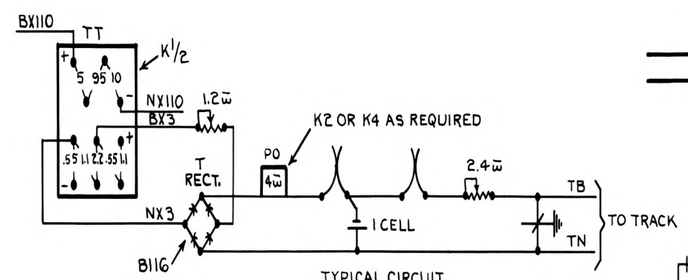

TYPICAL CIRCUIT OS TRACK FEED

TYPICAL CIRCUIT CONVENTIONAL TRACK FEED

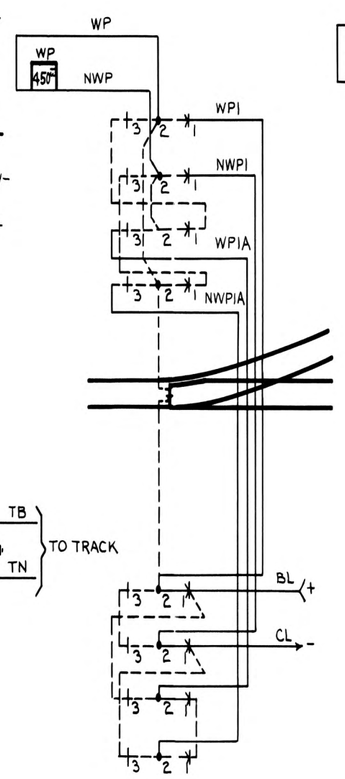

TYPICAL WP CIRCUIT FOR SPRING SWITCH

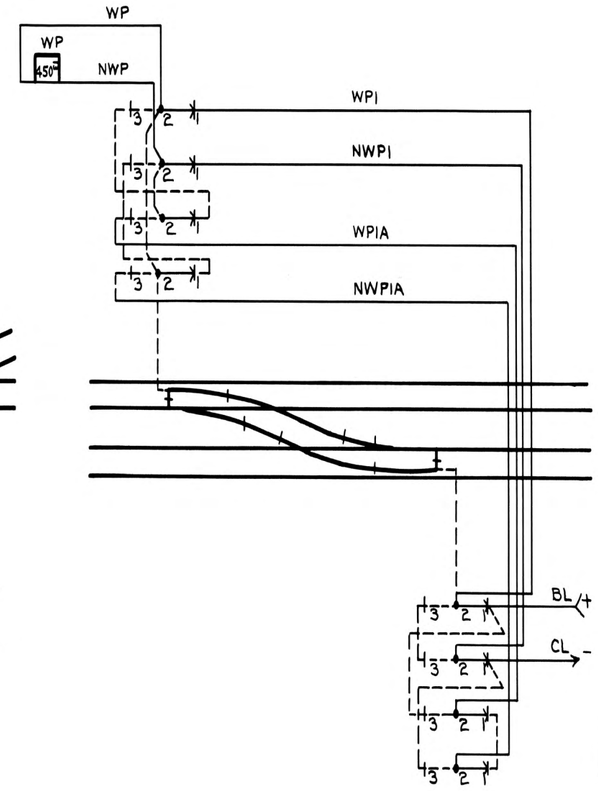

TYPICAL WP CIRCUIT FOR CROSSOVER

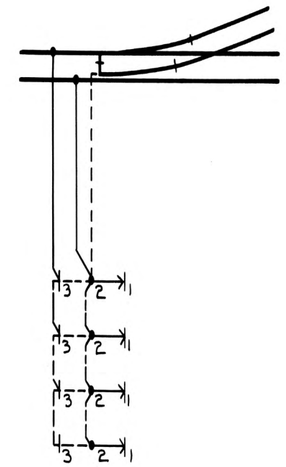

TYPICAL CIRCUIT FOR TRACK SHUNT

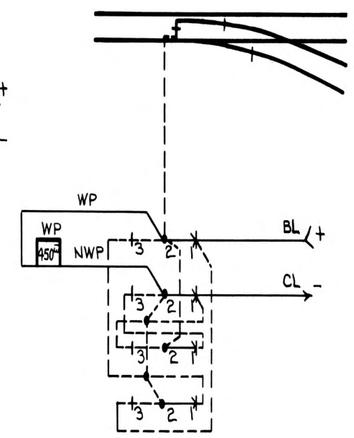

TYPICAL WP CIRCUIT FOR SINGLE SWITCH