SD 96C

CONTROL OF SIGNAL 35

W. A. AT&SFRR AFE 620-71 Plan SD96C
000 In X X X Cut
Date Nov 19, 76
Office of Engineer - Signals & Electrical
I. C. G. Railroad Chicago, Illinois
For F.S.E.

AT SIGS. 35-36 — RELAY HOUSE AT TOWER

H-5 → 35A (250) A1 A- → 35AR, 35ARN

H-2 WITH BLACK CENTER → 35B (250) A1 A- → 35BR, 35BRN

SIG. 35 TOP UNIT

35AHDP (500) → 35GN

35AHDP-1 → 35ACR → 35GB

35NP (500) → 35GN

35BHDPP (500) → 35GN

35BHDP → 35GN

35ACR

35BHDP-A → 35BHDP

SIG. 35 LOWER UNIT

35GB → 35GB

35PTR (DN-11P) PTR PTRN

35GBA → W10 → BX1, CX1

35AE, 35BE — 10V 2SW SINGLE FILAMENT

35AEN, 35BEN → 35EXN

35AEN-1 (1.5Ω) → 35GEN-2 → 35GER → 35GN

35BEN-1 (1.5Ω)

35-36FLR

35BE → 35BHDPP

35BE-1 → 35CR → 35ACR (DN-22L) → 35GBA

35AE → 35AE-1

35CR (DN-22L)

35GBB, 35GBA, 35GBR, 35GB, 35GN, 2Ω

RT-10 → BX1 → 15A → BX110; CX1 → 15A → CX110

CL → FN-16A → 35-36FLR

35AHR — 35ARN-1 — 35BP — N8

35AR-1 — R N

35BHR — 35BRN-1 — 35BDR — N8

35BR-1

35-33TPS — B8 — 5 — 35R-1 — 35NP (500) → 35GN

35TU — 35R-3 — 35LS — 35R-2 — 3

36BP — 35BDR-1 — 35BDR

35BP — 36BDR-1 — 36BDR

FOR CONTINUATION OF CIRCUIT SEE PAGE 21

35GN

CONTROL OF SIGNAL 102

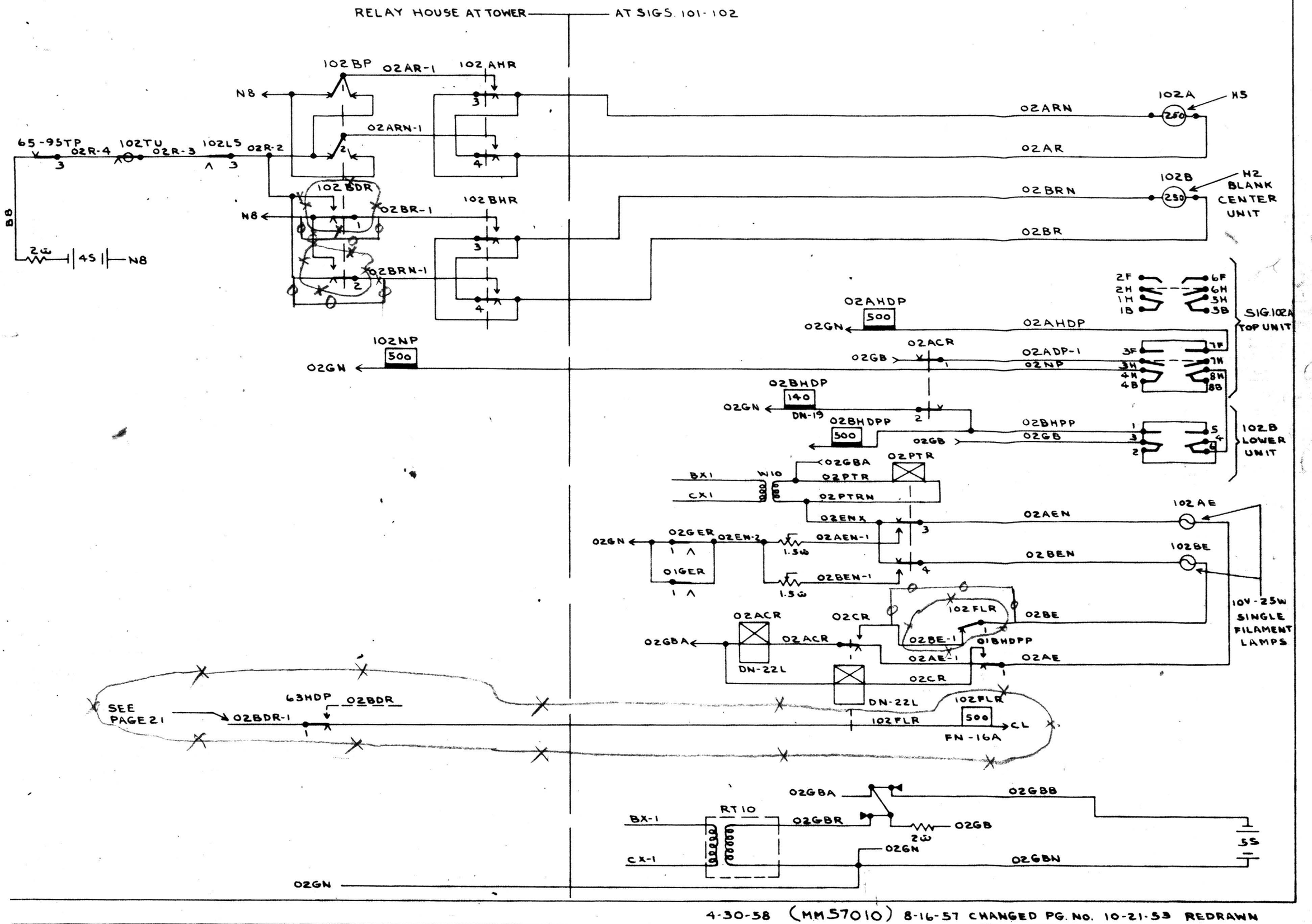

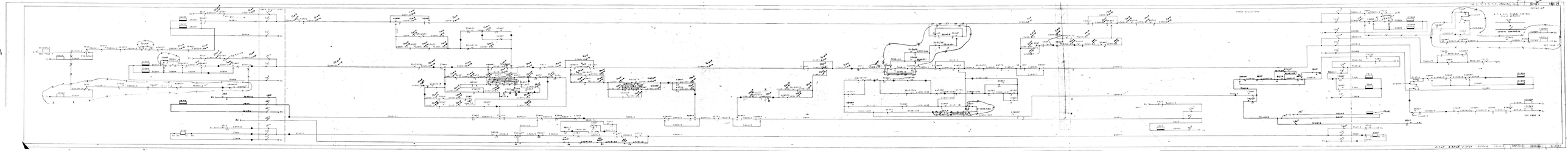

CONTROL OF EAST LINE CIRCUITS
47HDR, 47MR, 49HDR, 49MR, 01PCR

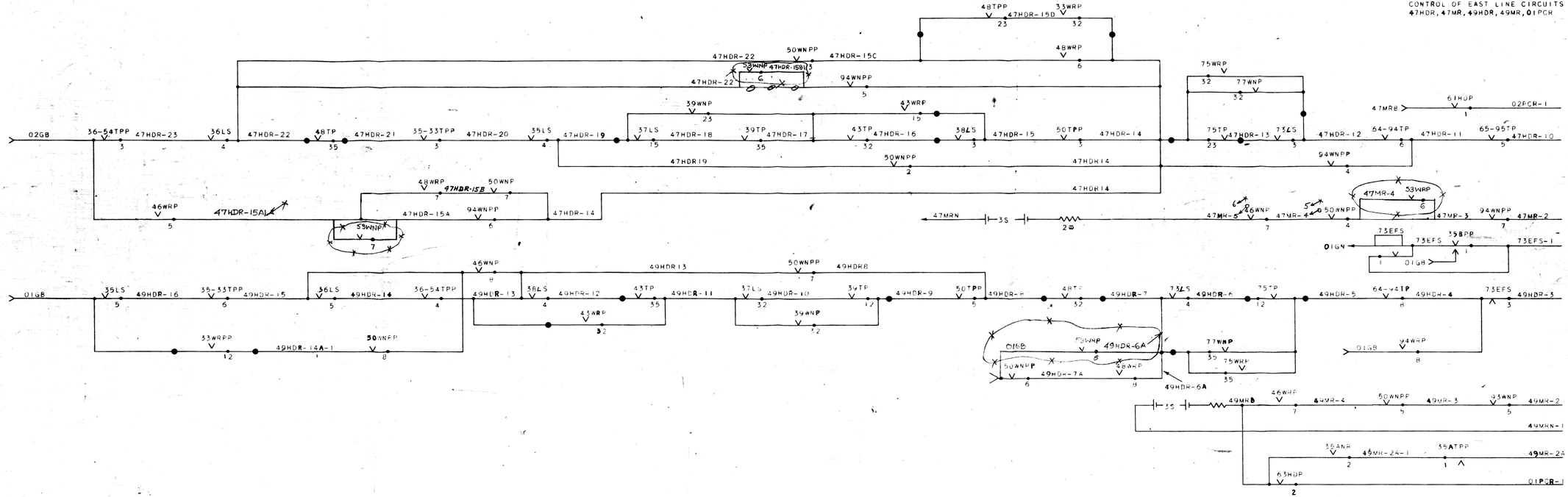

CONTROL OF WEST LINE CIRCUITS
12RMR, 14RMR, 61ATP, 63ATP

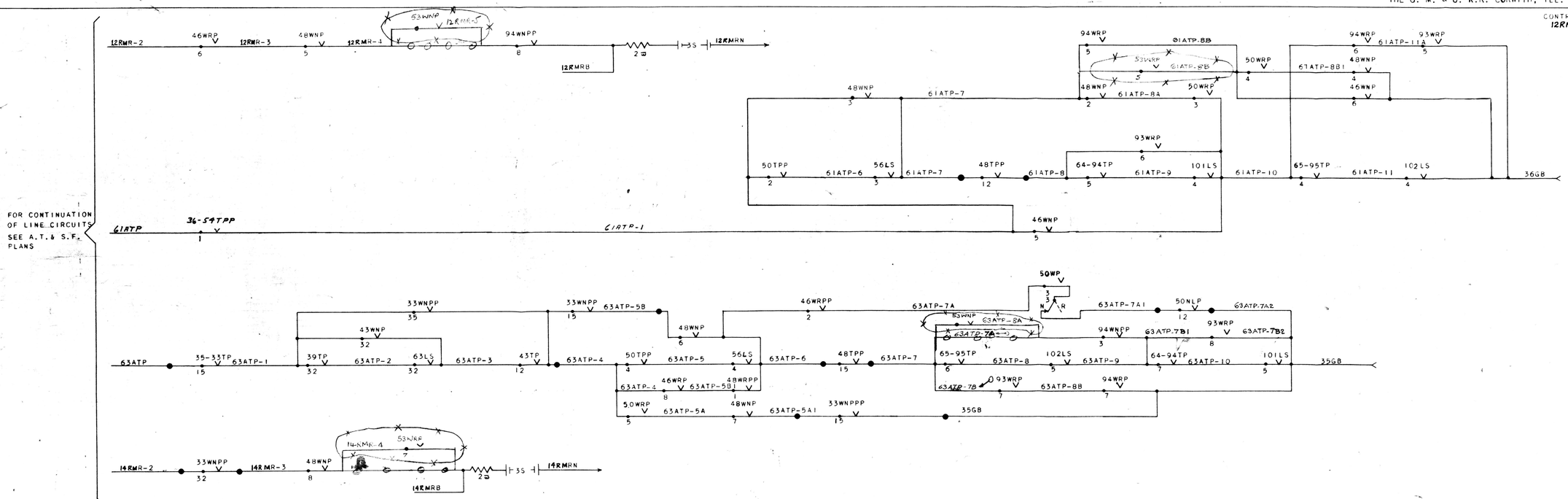

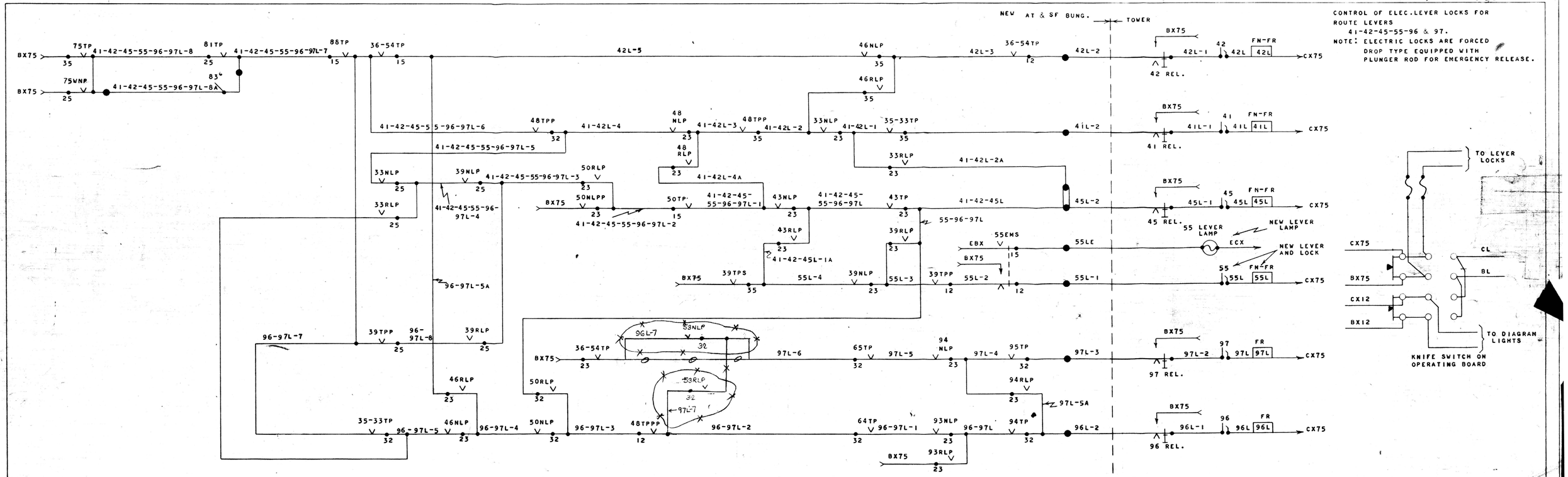
NEW AT & SF BUNG.
TOWER
CONTROL OF ELEC.LEVER LOCKS FOR ROUTE LEVERS 41-42-45-55-96 & 97.
NOTE: ELECTRIC LOCKS ARE FORCED DROP TYPE EQUIPPED WITH PLUNGER ROD FOR EMERGENCY RELEASE.
BX75
CX75
75TP
41-42-45-55-96-97L-8
81TP
41-42-45-55-96-97L-7
86TP
36-54TP
42L-5
46NLP
46RLP
42L-3
42L-2
42L-1
42L
FN-FR
42 REL.
75WNP
83
41-42-45-55-96-97L-8A
41-42-45-55-96-97L-6
48TPP
41-42L-4
48 NLP
41-42L-3
41-42L-2
33NLP
41-42L-1
35-33TP
41L-2
41L-1
41L
41 REL.
48 RLP
41-42L-4A
33RLP
41-42L-2A
41-42-45-55-96-97L-5
33NLP
39NLP
41-42-45-55-96-97L-3
50RLP
33RLP
41-42-45-55-96-97L-4
50NLPP
50TP
41-42-45-55-96-97L-1
43NLP
41-42-45-55-96-97L
43TP
41-42-45L
45L-2
45L-1
45L
45 REL.
41-42-45-55-96-97L-2
55-96-97L
55 LEVER LAMP
NEW LEVER LAMP
43RLP
39RLP
55EMS
EBX
55LE
ECX
NEW LEVER AND LOCK
41-42-45L-1A
39TPS
55L-4
39NLP
55L-3
39TPP
55L-2
55L-1
55
55L
96-97L-5A
96-97L-7
39TPP
96-97L-8
39RLP
53NLP
96L-7
36-54TP
97L-6
65TP
97L-5
94 NLP
97L-4
95TP
97L-3
97L-2
97
97L
97 REL.
53RLP
94RLP
97L-5A
46RLP
50RLP
35-33TP
96-97L-5
46NLP
96-97L-4
50NLP
96-97L-3
48TPPP
96-97L-2
64TP
96-97L-1
93NLP
96-97L
94TP
96L-2
96L-1
96
96L
96 REL.
93RLP
TO LEVER LOCKS
CL
BL
CX12
BX12
TO DIAGRAM LIGHTS
KNIFE SWITCH ON OPERATING BOARD

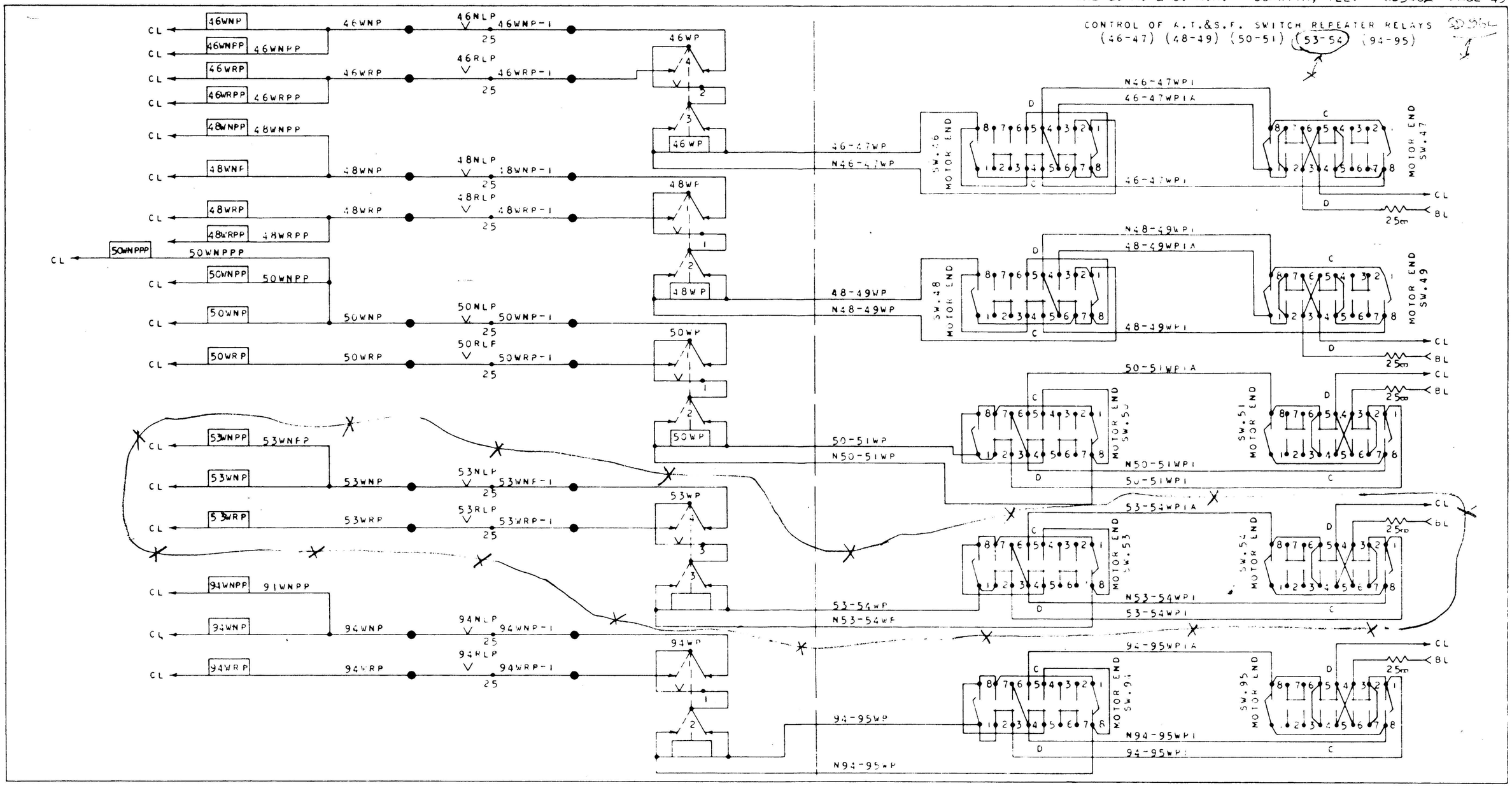
CONTROL OF A.T.&S.F. SWITCH REPEATER RELAYS
(46-47) (48-49) (50-51) (53-54) (94-95)
46WNP
46WNPP
46WRP
46WRPP
48WNPP
48WNP
48WRP
48WRPP
50WNPPP
50WNPP
50WNP
50WRP
53WNPP
53WNP
53WRP
91WNPP
94WNP
94WRP
46NLP
46RLP
48NLP
48RLP
50NLP
50RLP
53NLP
53RLP
94NLP
94RLP
46WNP-1
46WRP-1
48WNP-1
48WRP-1
50WNP-1
50WRP-1
53WNP-1
53WRP-1
94WNP-1
94WRP-1
25
CL
46WP
48WP
50WP
53WP
94WP
46-47WP
N46-47WP
48-49WP
N48-49WP
50-51WP
N50-51WP
53-54WP
N53-54WP
94-95WP
N94-95WP
N46-47WP1
46-47WP1A
46-47WP1
N48-49WP1
48-49WP1A
48-49WP1
50-51WP1A
N50-51WP1
50-51WP1
53-54WP1A
N53-54WP1
53-54WP1
94-95WP1A
N94-95WP1
94-95WP1
SW.46 MOTOR END
SW.47 MOTOR END
SW.48 MOTOR END
SW.49 MOTOR END
SW.50 MOTOR END
SW.51 MOTOR END
SW.53 MOTOR END
SW.54 MOTOR END
SW.94 MOTOR END
SW.95 MOTOR END
25Ω
BL

→ SD 96c

CONTROL OF SANTA FE SWITCH
LEVER REPEATER RELAYS

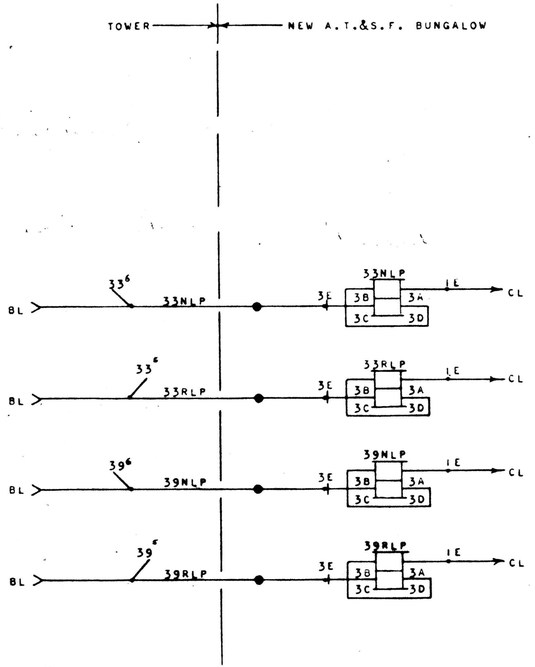

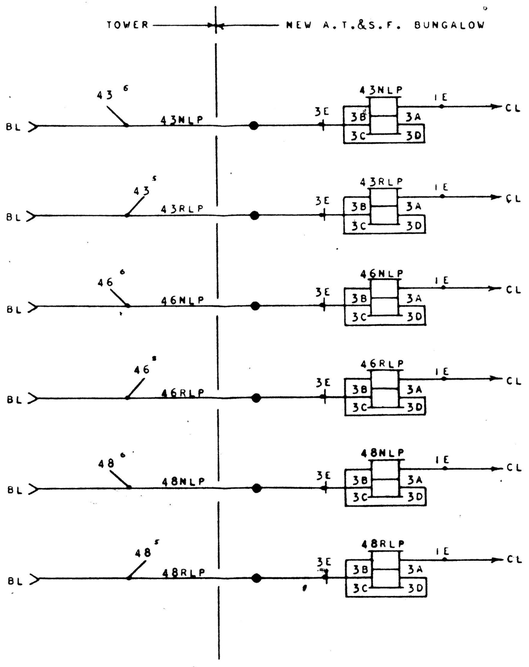

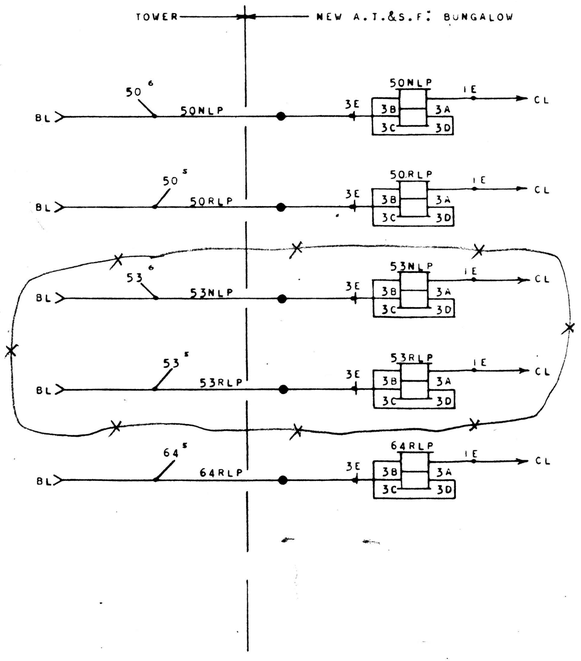

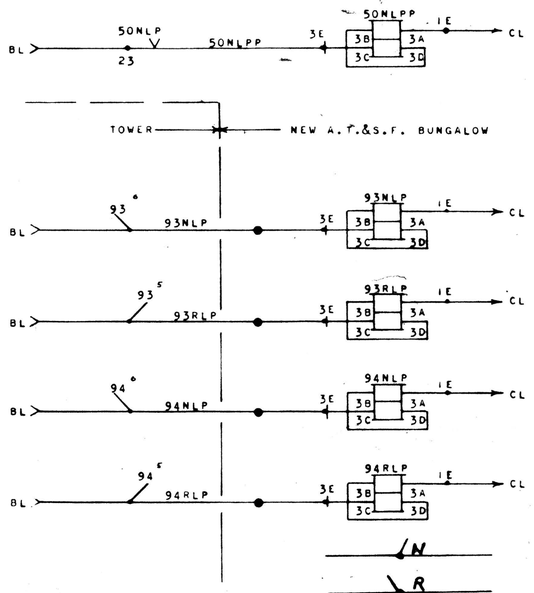

CONTROL OF ENERGY TO SIGNAL & SWITCH BUS BARS.

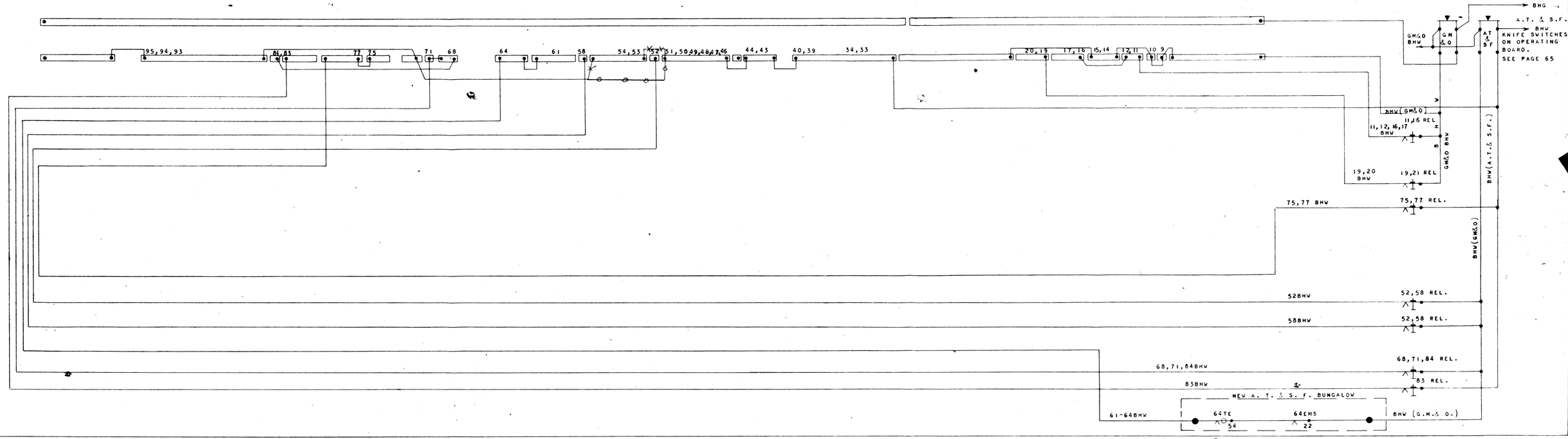

3-30-65 4-30-58 12-1-57 (MW57010) 8-16-57 10-21-53 6-25-52 6-1-43 11-28-39

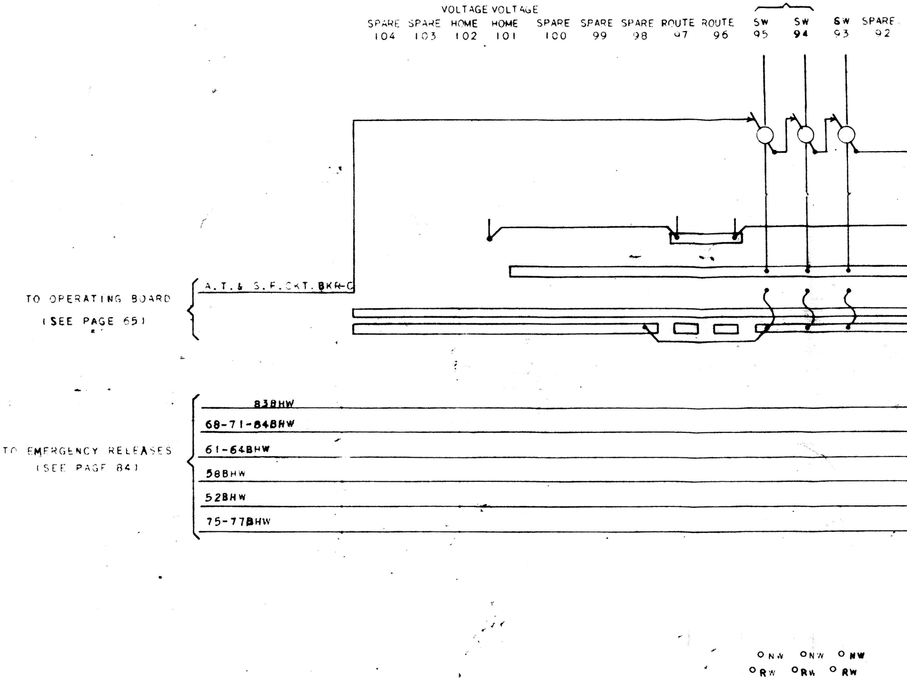
VOLTAGE VOLTAGE
SPARE 104
SPARE 103
HOME 102
HOME 101
SPARE 100
SPARE 99
SPARE 98
ROUTE 97
ROUTE 96
SW 95
SW 94
SW 93
SPARE 92
TO OPERATING BOARD
(SEE PAGE 65)
A.T.& S.F. CKT. BKR-C
TO EMERGENCY RELEASES
(SEE PAGE 84)
83BHW
68-71-84BHW
61-64BHW
58BHW
52BHW
75-77BHW
NW
RW
NW
RW
NW
RW

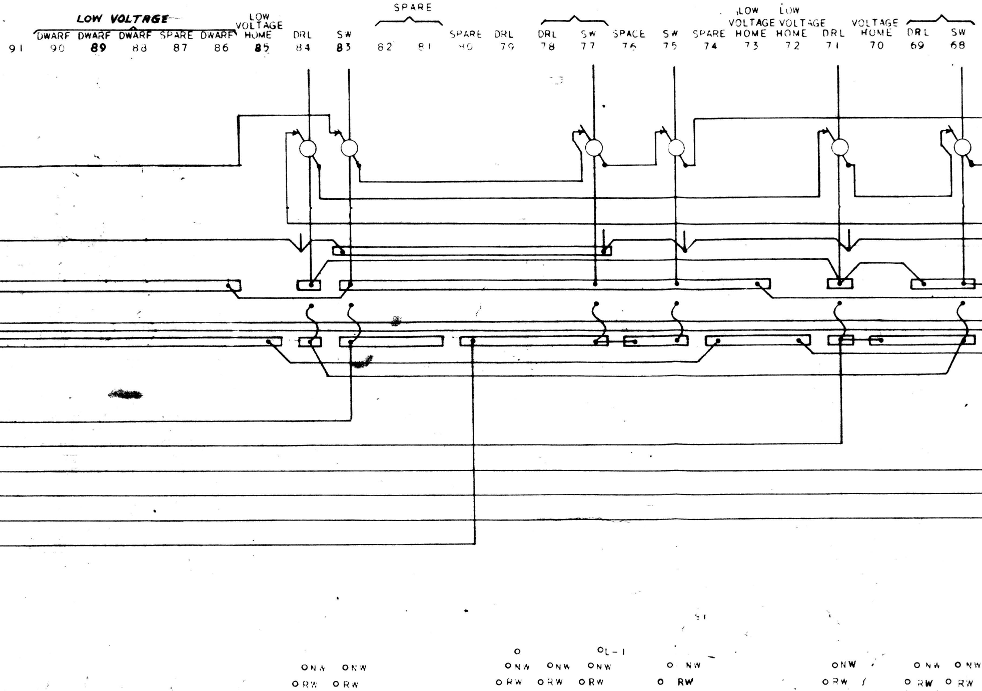
LOW VOLTAGE
DWARF
DWARF
DWARF
SPARE
DWARF
LOW VOLTAGE HOME
DRL
SW
SPARE
SPARE
DRL
DRL
SW
SPACE
SW
SPARE
LOW VOLTAGE HOME
LOW VOLTAGE HOME
DRL
VOLTAGE HOME
DRL
SW
91
90
89
88
87
86
85
84
83
82
81
80
79
78
77
76
75
74
73
72
71
70
69
68
O NW O NW
O RW O RW
O
O L-1
O NW O NW O NW
O RW O RW O RW
O NW
O RW
O NW
O RW
O NW O NW
O RW O RW

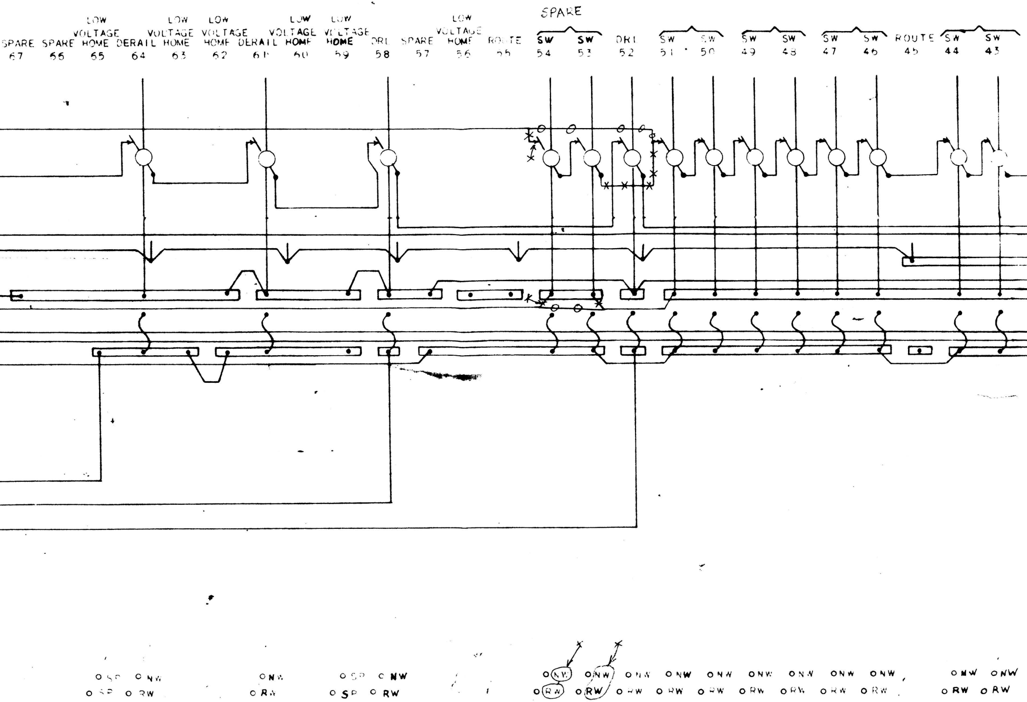
SPARE
SPARE 67
SPARE 66
LOW VOLTAGE HOME 65
DERAIL 64
LOW VOLTAGE HOME 63
LOW VOLTAGE HOME 62
DERAIL 61
LOW VOLTAGE HOME 60
LOW VOLTAGE HOME 59
DRL 58
SPARE 57
LOW VOLTAGE HOME 56
ROUTE 55
SW 54
SW 53
DRL 52
SW 51
SW 50
SW 49
SW 48
SW 47
SW 46
ROUTE 45
SW 44
SW 43
O SP O NW
O SP O RW
O NW
O RW
O SP O NW
O SP O RW
O NW O NW O NW O NW O NW O NW O NW O NW O NW
O RW O RW O RW O RW O RW O RW O RW O RW O RW
O NW O NW
O RW O RW

RECORD - RETIRE CROSSOVER 53-54

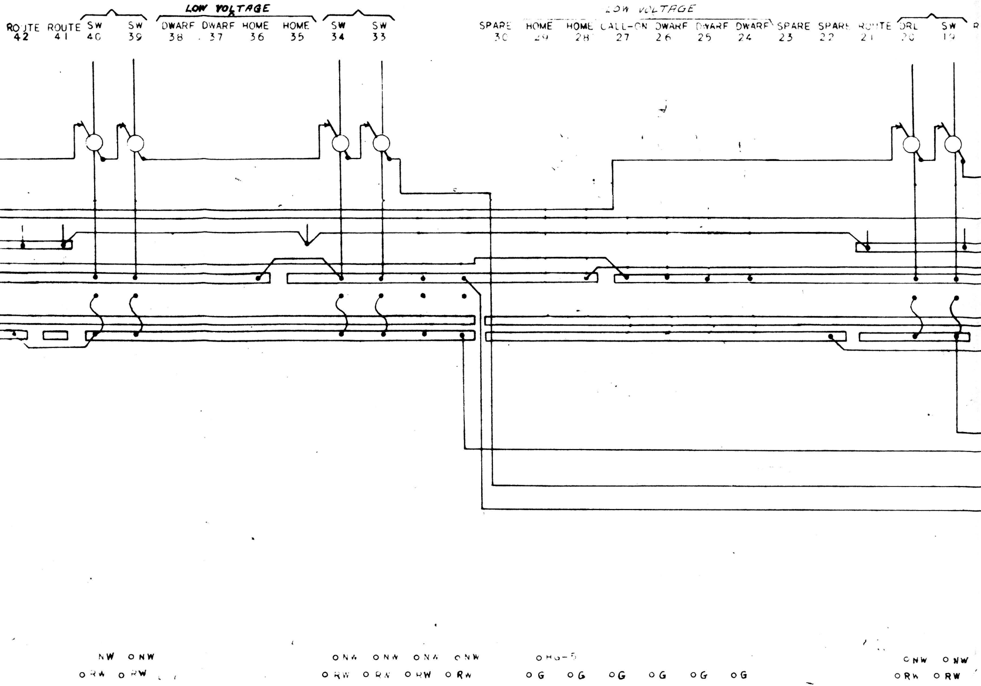
LOW VOLTAGE
ROUTE 42
ROUTE 41
SW 40
SW 39
DWARF 38
DWARF 37
HOME 36
HOME 35
SW 34
SW 33
LOW VOLTAGE
SPARE 30
HOME 29
HOME 28
CALL-ON 27
DWARF 26
DWARF 25
DWARF 24
SPARE 23
SPARE 22
ROUTE 21
DRL 20
SW 19
NW ○ NW
○ RW ○ RW
○ NW ○ NW ○ NW ○ NW
○ RW ○ RW ○ RW ○ RW
○ HG-5
○ G ○ G ○ G ○ G ○ G ○ G
○ NW ○ NW
○ RW ○ RW

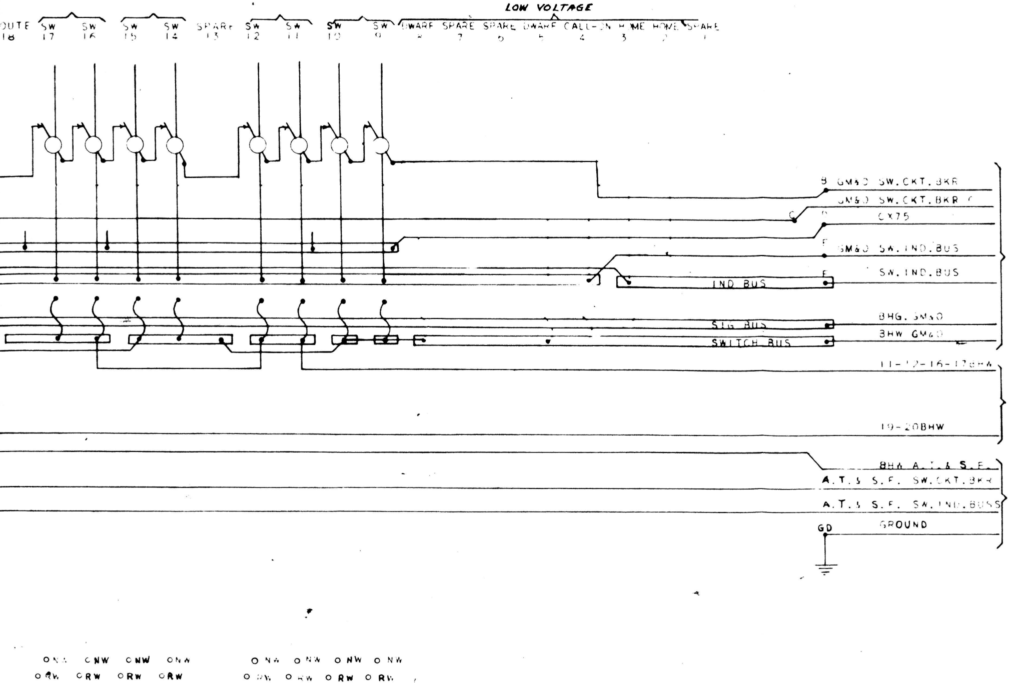

LOW VOLTAGE
OUTE 18
SW 17
SW 16
SW 15
SW 14
SPARE 13
SW 12
SW 11
SW 10
SW 9
DWARF 8
SPARE 7
SPARE 6
DWARF 5
CALL-ON 4
HOME 3
HOME 2
SPARE 1
B GM&O SW.CKT.BKR
GM&O SW.CKT.BKR C
C
D
CX75
F
GM&O SW.IND.BUS
E
SW.IND.BUS
IND BUS
SIG BUS
SWITCH BUS
BHG. GM&O
BHW GM&O
11-12-16-17BHW
19-20BHW
8HW A.T.& S.F.
A.T.& S.F. SW.CKT.BKR
A.T.& S.F. SW.IND.BUSS
GD
GROUND
ONW ONW ONW ONW
ORW ORW ORW ORW
ONW ONW ONW ONW
ORW ORW ORW ORW

2-28-71 3-30-65 3·21-61 [illegible]

THE C. M. & O. R.R. CO

BUS BAR
POLAR

TO OPERATING BD.
SEE PAGE 65

TO EMERGENCY RELEASES
SEE PAGE 84

TO OPERATING BOARD
SEE PAGE 65

SWITCHES & [illegible]

(MM57010) [illegible] [illegible] [illegible] [illegible]-43

INDICATOR LAMPS ON BOARD TO BE 110V-10 WATT

GROUND INDICATION: LAMPS 1 & 2 BURNING AT THE SAME BRILLIANCY INDICATES PLANT CLEAR OF GROUNDS. LAMP 1 BRIGHT AND LAMP 2 DIM OR OUT INDICATES POSITIVE GROUND. LAMP 2 BRIGHT AND LAMP 1 DIM OR OUT INDICATES NEGATIVE GROUND.

RED
G.M.& O.SW.BREAKER
RED
S.FE SW. BREAKER
D. C. AMMETER D-50
A.T.& S.FE CHW
110V BATT. FROM POWER BOARD (SEE PAGE 64)
SW.CKT.BKR.C
SW.CKT.BKR.
SW.IND.BUS
AT& S.FE SW.IND.BUSS
31,32,33,34,39,40,43,44,46,47,48, 49,50,51,53,54,75,77,83,86,88, 89,90,92,94,95
8,9,10,11,12,14,15,16,17,19,20, 52,58,61,64,68,71,84
IND.BUS
SWITCHES
G.M. & O.
G.M&O. S.FE
TO MACHINE (SEE PAGES 61&63)
BHG-G.M.& O.
BHW-G.M.& O.
BHW-G.M.& O.
BHW-A.T.& S.F.
GM&O SWITCH CKT.BREAKER LAMP NOT IN USE
GM&O SIGNAL CKT.BREAKER LAMP NOT IN USE.
S.FE SWITCH CKT.BREAKER LAMP NOT IN USE.
CHG
COMMON RETURNS FROM OPERATING FUNCTIONS
GROUND POST ON INTERLOCKER
110V A.C.
20A
1 TO 12V
75
CX75
BX75
CX12
BX12
LEVER
LOCKS
CL
BL
LIGHTS
CH-110
BH-110
TO FUSES OFF SW.5 ON POWER BOARD (SEE PAGE 64)
BX75
CX75
EBX
ECX
TO LEVER LOCK CIRCUITS
TO TERM"D"ON MACH.(SEE PG.63)
SEE PG.41
TO DIAGRAM LIGHT CIRCUITS (SEE PAGE 57)
FROM POWER BOARD (SEE PAGE 64)
110V A.C.
110V A.C.

OPERATING BOARD WIRING

SD 340

THE G. M. & O. R.R. CORWITH, ILL. SD 960 PAGE 65

(MM57010) 8-16-57 10-21-53 7-23-51 6-1-43 4-2-29 2-28-41 4-30-58 12-1-57

RELAY HOUSE LAYOUT

NORTH SIDE

35 AHR	35 BHR	35 BDR	38 TU	36 AHR	36 BHR	56 TU	36 BDR	38 HR	56 HR	73 TU	61 HDP	63 HDP	35 ATPP	83 WNP	83 WRP	88 HR	89 HR	90 HR	CALL
500	500	500	TG	500	500	TN 10	500	500	500	TN 10	500	500	500	500	500	500	500	500	500

46 WRP	46 WRPP	46 WP	46 WNP	46 WNPP	48 WRP	48 WRPP	48 WP	48 WNP	48 WNPP	50 WRP	50 WP
500	500	250	500	500	500	750	250	500	500	500	250

94 WRP	94 WP	94 WNP	94 WNPP	35 NP	35 LS	35 TU	36 NP	36 LS	36 TU	FR
500	500	500	500	500	500	DT 10	500	500	DT 10	NF 2

38 NP	38 LS	56 NP	56 LS	73 NP	73 LS	101 NP	101 LS	101 TU	102 NP
500	1000	500	1000	500	500	500	500	DT 10	500

BB | 45 | NB — 12RMRB | 35 | 12RMRN

SOUTH SIDE

86 HR	86 NP	88 NP	89 NP	73 EFS	35 BPP	90 NP	73 JR	73 HR	101 AHR	101 BHR	101 BDR	102 AHR	102 BHR	102 BDR
500	500	500	500	500	500	500	500	500	500	500	500	500	500	600

50 WNPPP	50 WNPP	50 WNP	53 WRP	53 WP	53 WNP	53 WNPP	93 WRP	93 WRPP	93 WP	93 WNP
1000	500	500	500	250	500	500	500	670	250	500

58 WRP	52 WRP	86 LS	33-35 TPS	33-35 TPP	36-54 TPS	36-54 TPP	64-94 TP	6595 TP	65 TPP	94 TPS	95 TPS
500	500	500	500	500	500	500	500	500	500	500	500

86 TU	102 LS	102 TU	50 TPS	50 TPP	75 TPS	35 BP	36 BP	101 BP	102 BP
TN 10	500	DT 10	500	500	1000	250	250	250	250

47 MR BATT | 35 | — 49 MR BATT | 35 | — 14RMR BATT | 35 |

RELAYS NOT TO SCALE

NOTE : Relays 50WP-48WP-46WP 53WP-93WP-35BP-36BP-101BP & 102 BP Furnished by A.T.E.S.F With neutral contacts 186 removed.

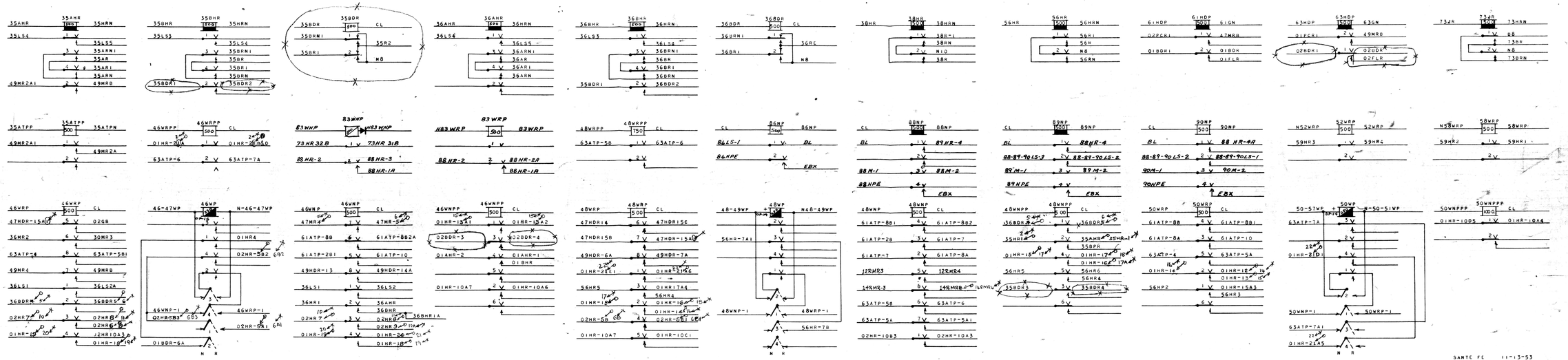

6-11-73 2-28-71 3-30-65 4-30-58 11-11-57 (M57010) 8-16-57 6-22-54

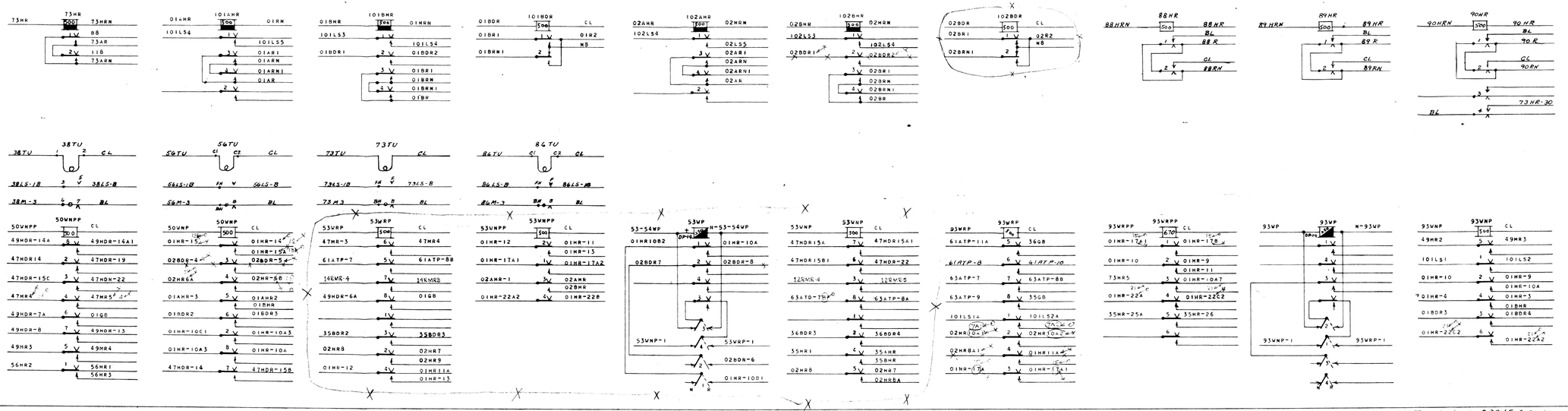

SANTE FE 11-13-53 6-16-53

6-11-73 2-28-71 3-30-65 3-21-61 4-30-58 (MM57010) 8-16-57 6-22-54

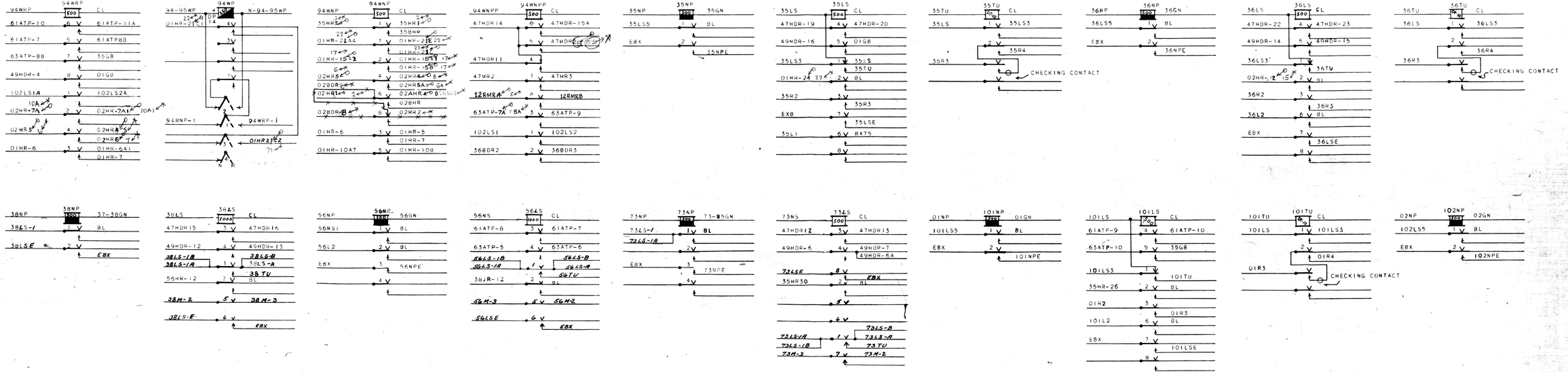

SANTA FE 6-16-53

6-11-73 2-28-71 3-21-61 4-30-58 (MM57010) 8-16-57 REV. 11-13-53 6-22-54

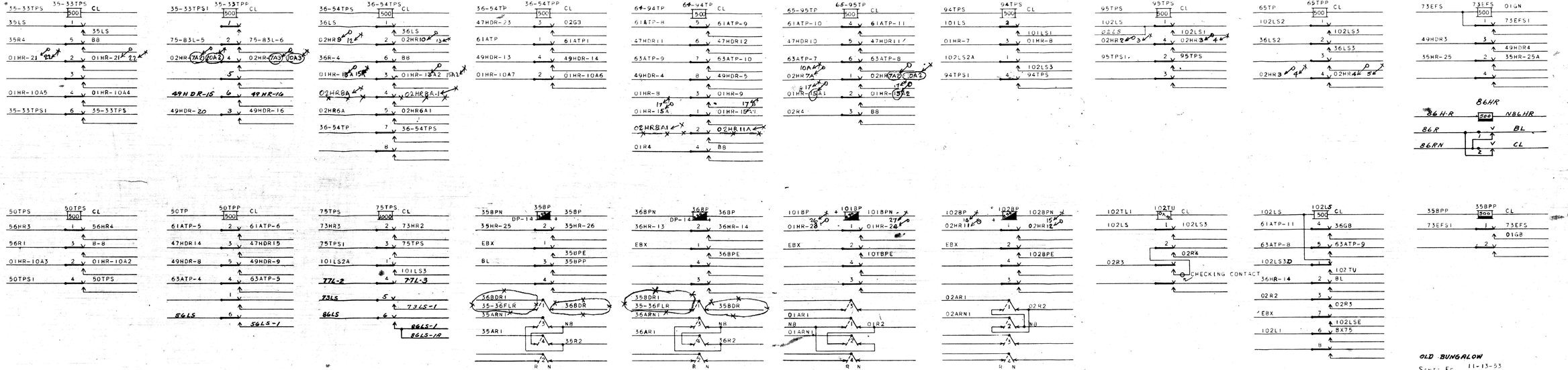

OLD BUNGALOW
SANTA FE 11-13-53
6-16-53

2-28-71 3-30-65 3-21-61 4-30-58 11-11-57 (MM-57010) 8-16-57 6-22-54

RACK #2

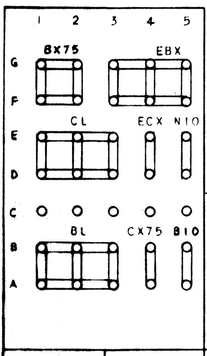

	1	2	3	4	5	6	7	8
J			(8)	(8)				59TU 25 24 (5)
H				(8)	33NLP 55 (1)	33WNP 48 (2)	33WNPP 48 (1)	33WNPPP 48 (1)
G	33RLP 55 (1)	33WRP 48 (2)	33WRPP 48 (1)	A35 ANN (7)	35ATP 18 (1)	36ATP 18 (1)	35-33TP 27 (1)	36-34TP 27 (1)
F	37HR 21 (3)	37WP 6 (1)	37LS 37 (1)	37TU 37 19 37 (5)	38NLP 54 (1)	39TP 27 (1)	39TPP 27 (1)	39TPS 27 (1)
E	39NLP 55 (1)	39WNP 48 (2)	39RLP 55 (1)	39WRP 48 (2)	43TP 27 (1)	43TPS 27 (1)	43NLP 55 (1)	43WNP 48 (2)
D	43RLP 55 (1)	43WRP 48 (2)	46NLP 55 (1)	(6)	46RLP 55 (1)	48TP 27 (1)	48TPP 27 (1)	48TPPP 27 (1)
C	48NLP 55 (1)	(8)	48RLP 55 (1)	(8)	50TP 28 (1)	50NLP 55 (1)	50NLPP 55 (1)	50RLP 55 (1)
B	(8)	53NLP 55 (1)	53RLP 55 (1)	(8)	55TE 44 (7)		55EMS 44 (1)	56NLP 54 (1)
A		58TP 28 (1)	58TPS 28 (1)	58TTHER 28 28 (6)	59HR 22 (1)	59NP (1)	59NS 38 (1)	59NLP 54 (1)

REF. NO.	TYPE	DWG. NO.
1	B1-NEUT	56001-783 GR. 1
2	B1-BIASED NEUT	56001-803 GR. 3
3	B1-SLOW REL	56001-792 GR. 2
4	B1-TRACK	56001-787 GR. 1
5	B1-THER-30 SEC	57100-702 GR. 11
6	B1-THER-10 SEC	57100-703 GR. 1
7	B2-MOTOR TIMER	57265-801 GR. 9
8	FILLER PLATE	42812

"B" RELAY RACK #2
ARRANGEMENT PLAN

THE G. M. & O. R.R. CORWITH, ILL.

SD 3960 PAGE 87

SD 346

2-28-71 3-30-65 3-21-61 4-30-58 11-11-57 (MM57010) 8-16-57

SD34C

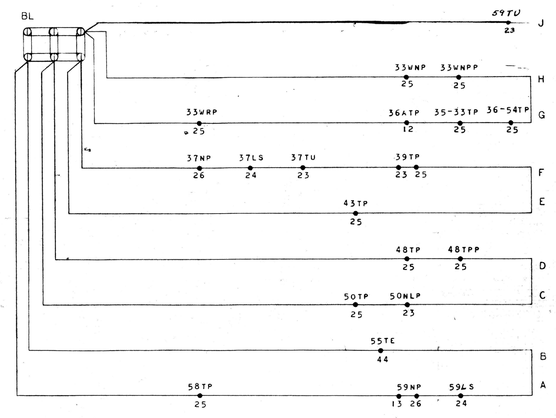
BL
1 2 3 4 5 6 7 8
59TU
23
J
33WNP 33WNPP
25 25
H
33WRP 36ATP 35-33TP 36-54TP
25 12 25 25
G
37NP 37LS 37TU 39TP
26 24 23 23 25
F
43TP
25
E
48TP 48TPP
25 25
D
50TP 50NLP
25 23
C
55TE
44
B
58TP 59NP 59LS
25 13 26 24
A

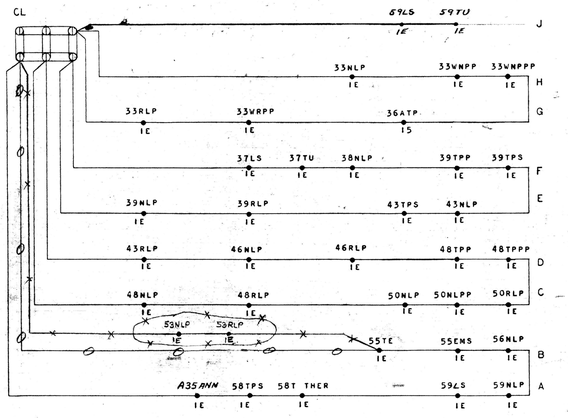
CL
1 2 3 4 5 6 7 8
59LS 59TU
1E 1E
J
33NLP 33WNPP 33WNPPP
1E 1E 1E
H
33RLP 33WRPP 36ATP
1E 1E 15
G
37LS 37TU 38NLP 39TPP 39TPS
1E 1E 1E 1E 1E
F
39NLP 39RLP 43TPS 43NLP
1E 1E 1E 1E
E
43RLP 46NLP 46RLP 48TPP 48TPPP
1E 1E 1E 1E 1E
D
48NLP 48RLP 50NLP 50NLPP 50RLP
1E 1E 1E 1E 1E
C
53NLP 53RLP
1E 1E
55TE
1E
B
55EMS 56NLP
1E 1E
A35ANN 58TPS 58T THER 59LS 59NLP
1E 1E 1E 1E 1E
A

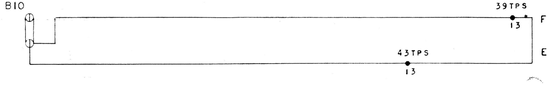
BIO
39TPS
13
F
43TPS
13
E

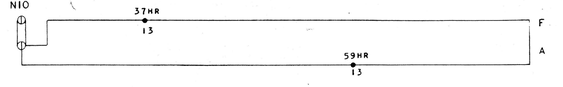
NIO
37HR
13
F
59HR
13
A

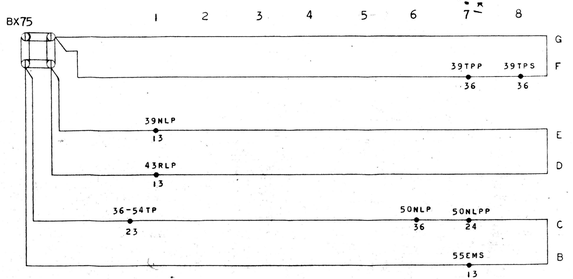
BX75
1 2 3 4 5 6 7 8
39TPP 39TPS
36 36
G
F
39NLP
13
E
43RLP
13
D
36-54TP
23
50NLP 50NLPP
36 24
C
55EMS
13
B

CX75
FOR TEST PURPOSES

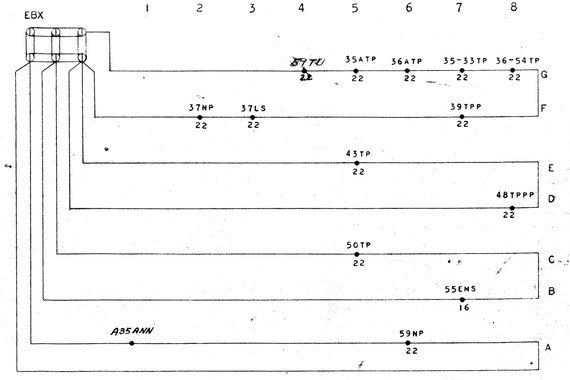
EBX
1 2 3 4 5 6 7 8
59TU 35ATP 36ATP 35-33TP 36-54TP
22 22 22 22 22
G
37NP 37LS 39TPP
22 22 22
F
43TP
22
E
48TPPP
22
D
50TP
22
C
55EMS
16
B
A35ANN 59NP
22
A

ECX
FOR TEST PURPOSES

SD 34C TRACK DIAGRAM

ELECTRIC LEVER LOCKS					
LEVER NO.	LOCKING POSITION	LEVER NO.	LOCKING POSITION	LEVER NO.	LOCKING POSITION
11	FN			75	FN-FR
12	FN-FR	45	FN-FR	77	FN-FR
18	FR	52	FR	83	FN-FR
19	FR	55	FN-FR	84	FR
21	HR	58	FN-FR	96	FR
35	HR	61	FN-FR	97	FR
41	FN-FR	64	FN-FR		
42	FN-FR	71	FN-FR	102	HR

W. A. AT&SF/GC Plan SD 96
000 In XXX Out
Date Nov 17 76
Office of Engineer - Signals & Electrical
I. C. G. Railroad Chicago, Illinois
For FSE

LE MOYNE, ILL.

To Chillicothe

ROUTE LEVER 42

ROUTE LEVER 41 On plant line

ROUTE LEVER 45

ROUTE LEVER 55

ROUTE LEVER 97

ROUTE LEVER 96

ROUTE LEVER 21

ROUTE LEVER 18

On A.T.&S.F. Line

On Plant Line

On plant Line

On plant Line

On plant Line

FSE PLANCE LOCATION OF SWITCHES

Southbound

Northbound

Southwest Expressway

Southwest Expressway

On Plant Line

ILL. NOR. R.R. Yard

DRAINAGE CANAL

A.T.&S.F. Ry.

On plant line

ILLINOIS NORTHERN R.R.

Phone

New AT&SF Bldg

Old S.F. Bungalow

A.T.&S.F. Ry. Yard

G.M.&O.R.R.

To St. Louis

To Chicago

To Chicago

NORTH AVE.

BELT RY.

PULASKI RD. O.H.

94(36DD)

12R(36D)

92(35DD)

4R (35D)

1(2DD)

20(2D)

49(101D)

45(101DD)

21(29D)

10,849'

4551'

4020'

2980'

4289'

4069'

2-3-9 On Plant Line

x = track circuiting 3094 T-track & location Plan

CHICAGO ILLINOIS DIVISION

A.T.&S.Fe R.R. - Chicago Terminal Division
G.M.&O.R.R. - Eastern Division - Sub-Div. 1

TIME TABLE DIRECTION OF MOVEMENT

AT&SFe R.R. - Eastward & Westward
G.M.&O.R.R. - Northward & Southward

Installed	
4-1-58	May 30, 1958 Santa Fe second track added. March 31, 1961
	March 30, 1968 Southwest Expressway added.
	April 1, 1968 Change Semaphore Sigs to Color Lights.
	July 4, 1968 Change Signals 2, 3, 4, 27, 28, 29 to Color Position.
	Not to Scale

CORWITH, ILL. SD 34C

TRACK & LOCATION PLAN

Office of Supt Sigs. G.M.&O.R.R. Bloomington Ill.