Sheet 1 of 8

TUSCOLA, ILL. SD19C
INTERLOCKING CIRCUIT PLAN

Office of Signal Engineer
I.C.R.R. Chicago, Ill.

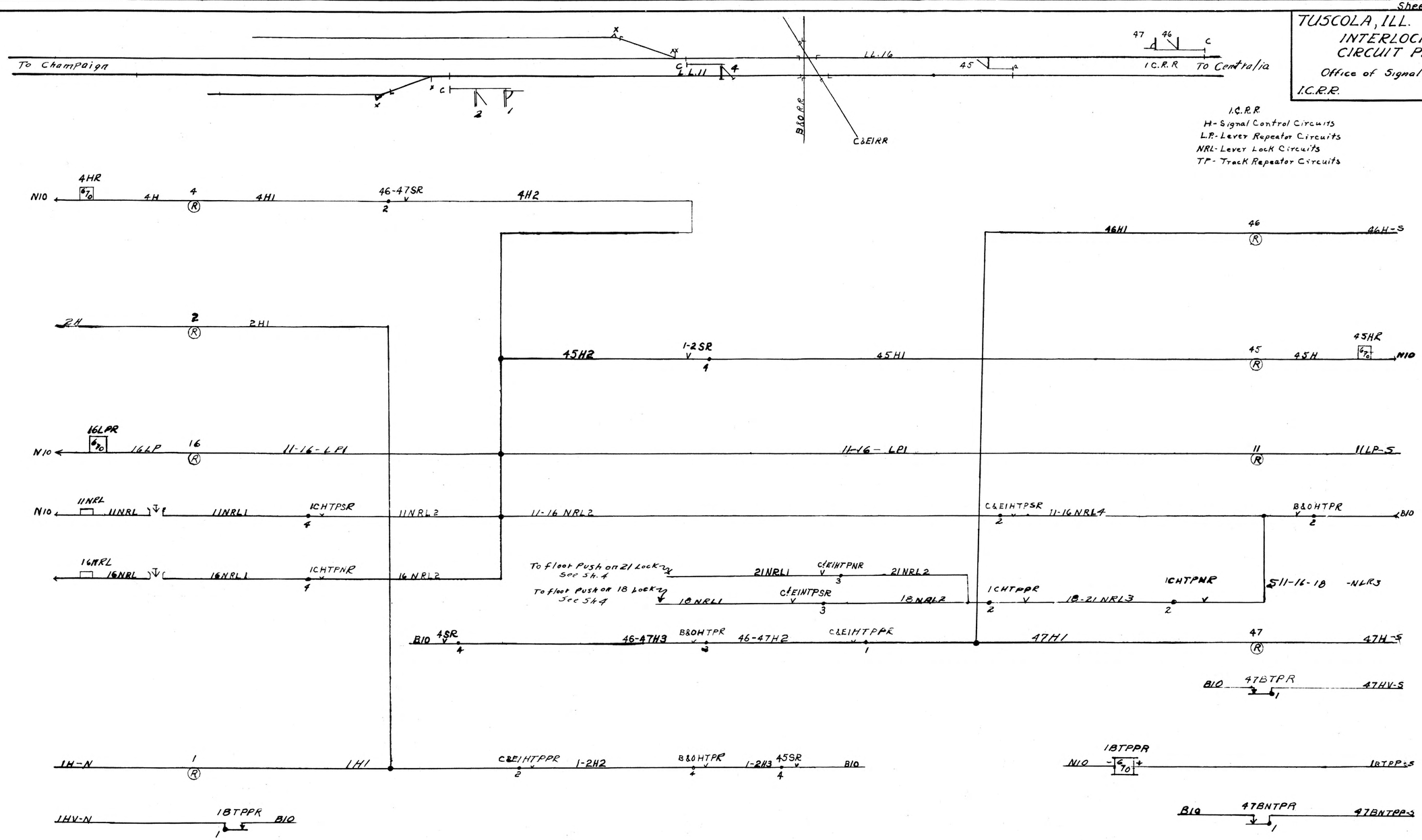

Checked
W.H. Yancey
Approved:
H.G. Wenzinger
Signal Engineer
Oct. 1, 1945
Dec. 31, 1945
Aug. 1, 1947
Dec. 30, 1947
Sept. 17, 1956.
June 5, 1959.
Aug 18, 1961
Oct. 31, 1966
Dec. 9, 1966
March 22, 1967
May 8 1967
June 11, 1970
June 21, 1971
Drawn by: W.R.R.
No Scale

Tuscola, Ill. SD 19C
I.C.R.R.

L - Lever Lock Circuits
I.C.H.T.P - Cross Lock Circuits

S. - Directional Stick Circuits

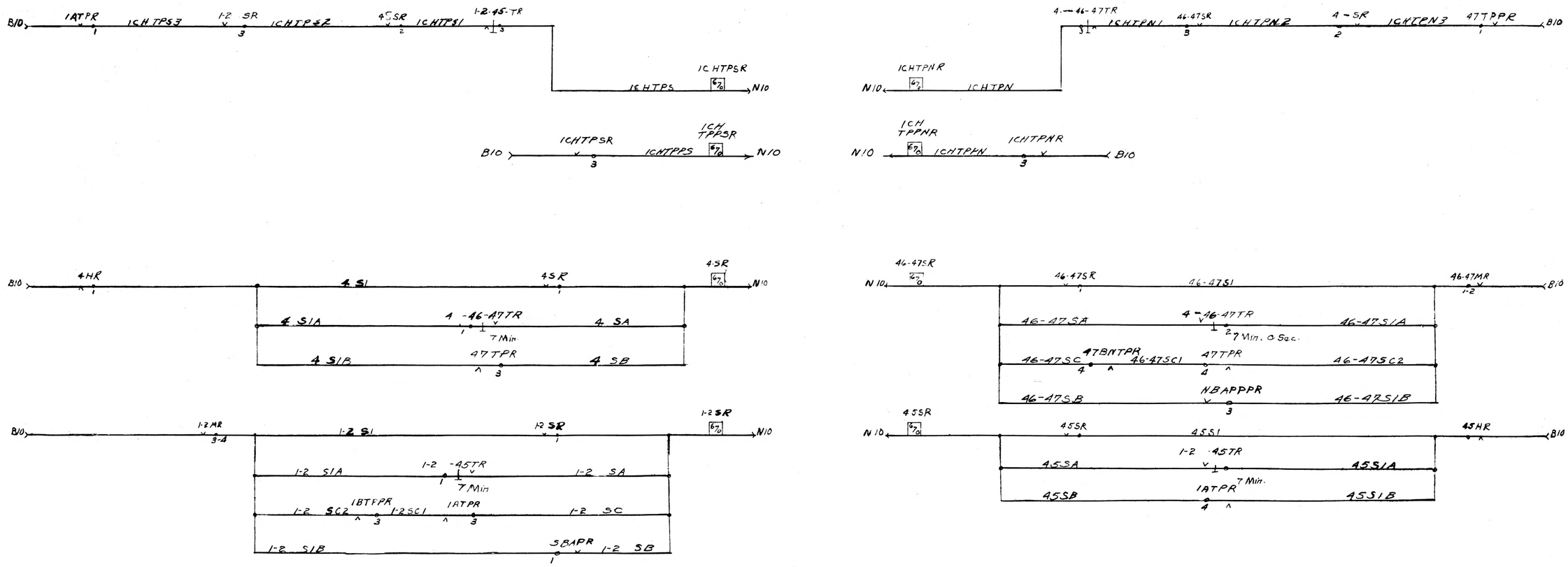

2

June 21, 1971
June 11, 1970

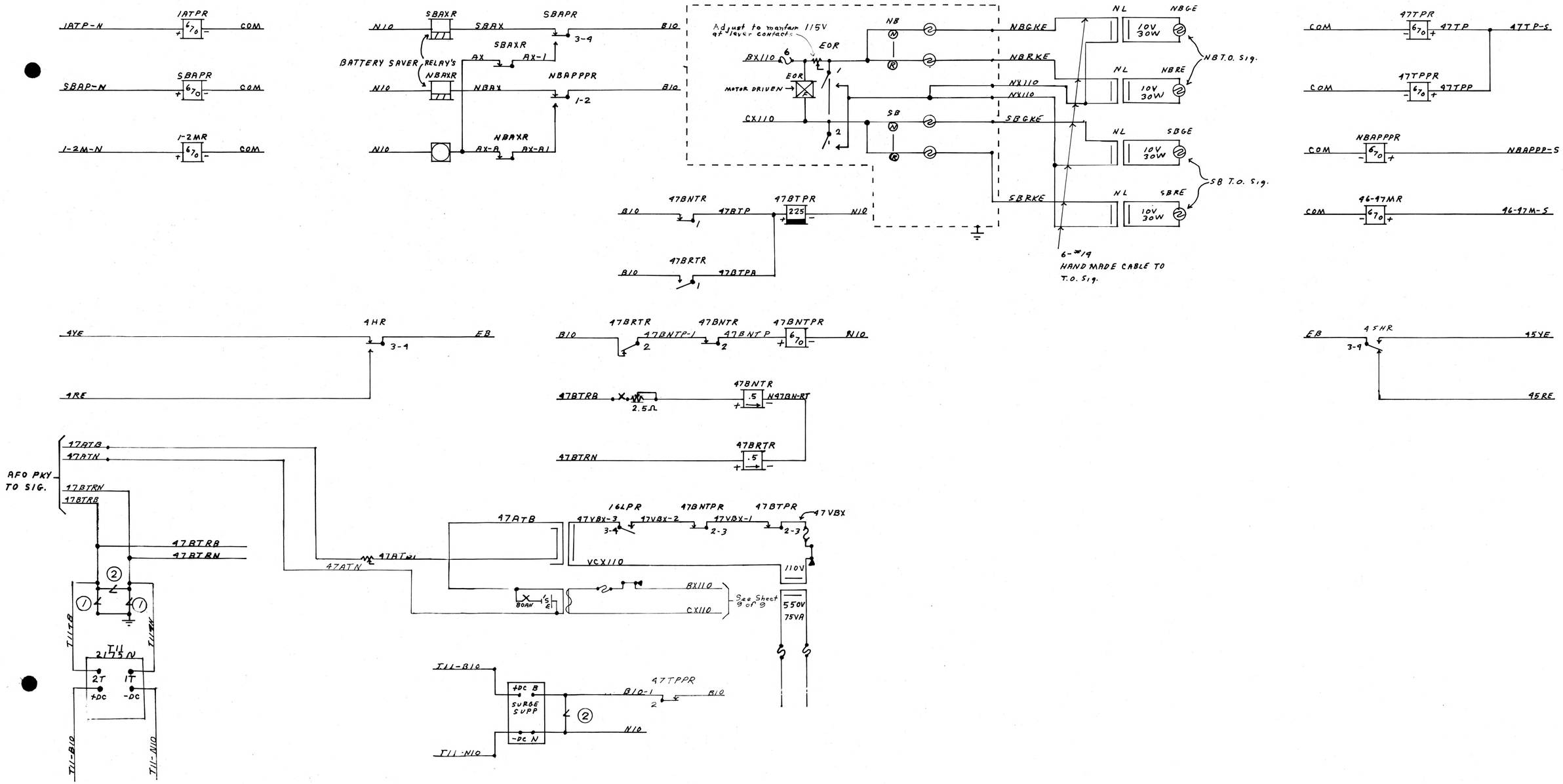

June 21, 1971
12-3-70
June 14, 1970

B&O Tower Circuits

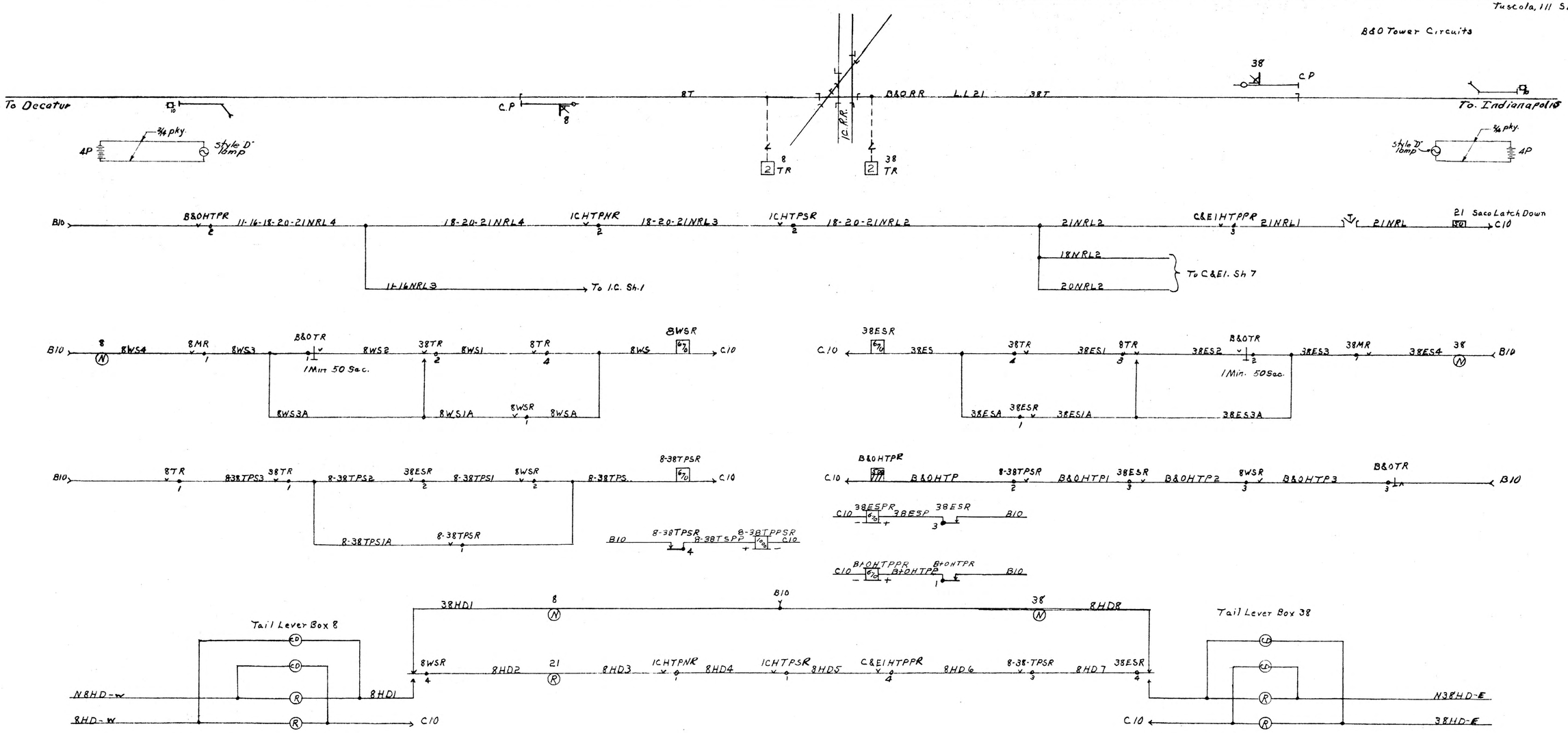

4

Tuscola, Ill. SD19C

B&O Line Circuits

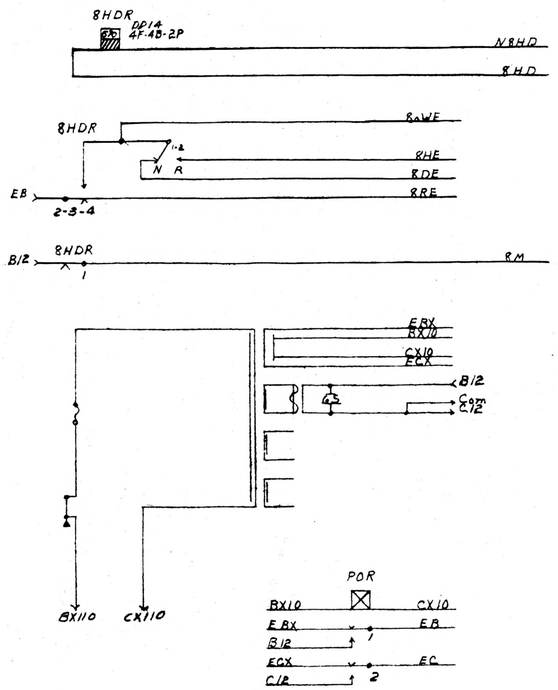

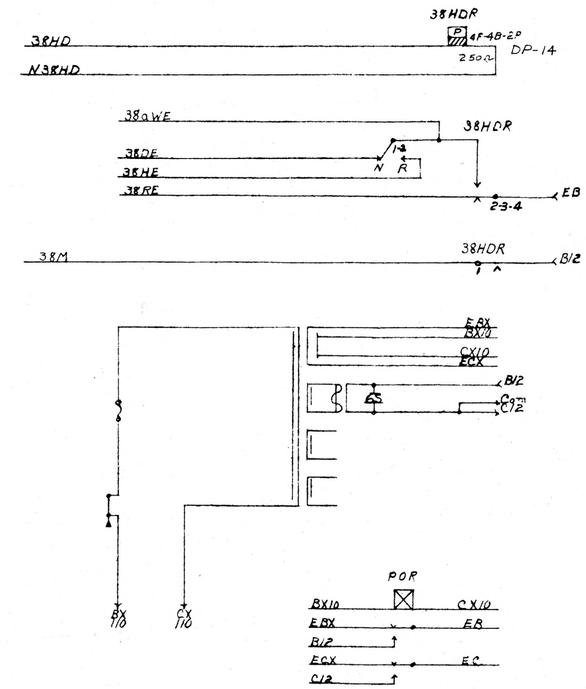

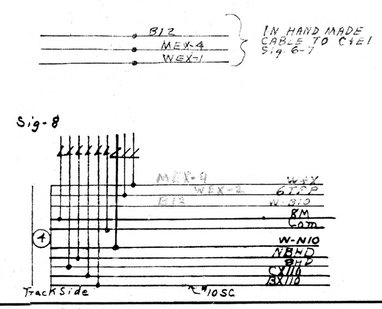

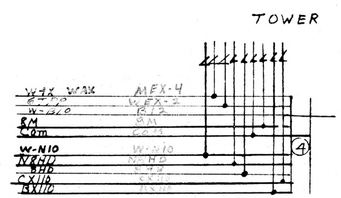

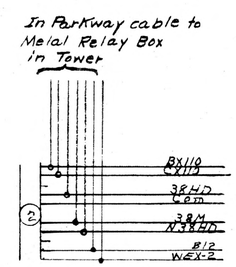

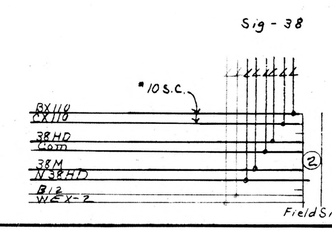

June 21, 1971
June 11, 1970

5

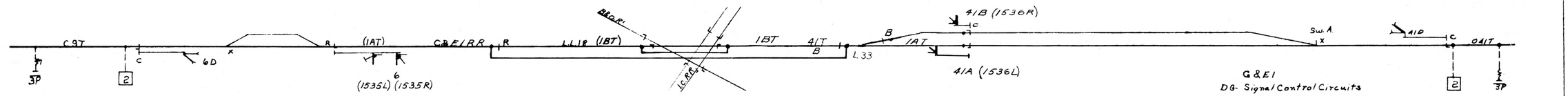

PKY TO MOP INSTRUMENT HOUSE 4 - 7/9 PKY

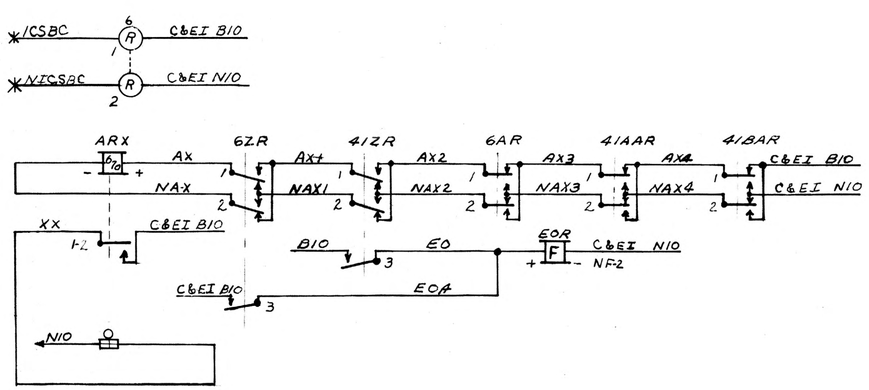

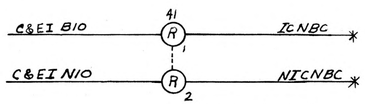

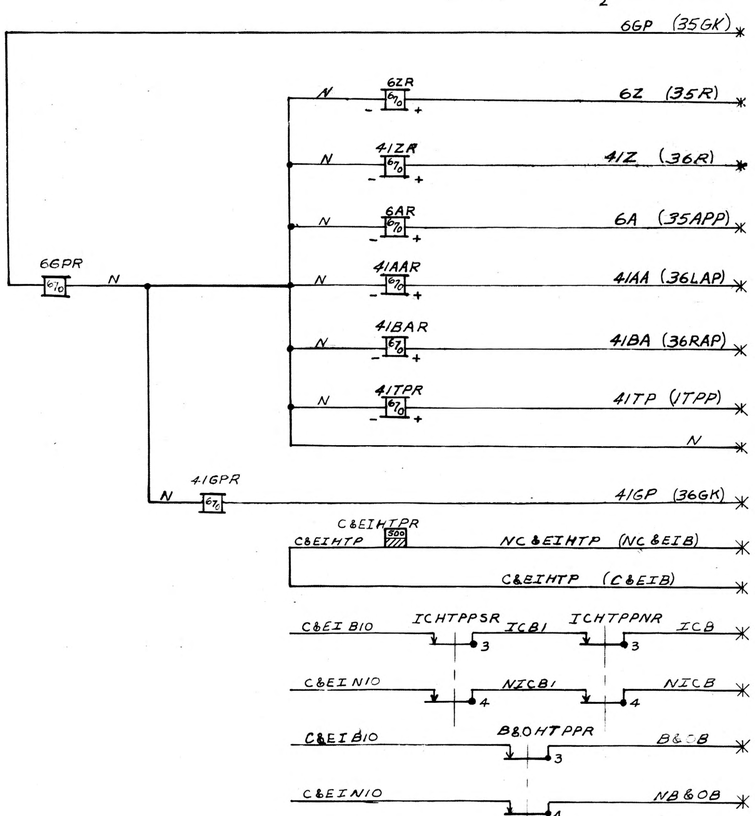

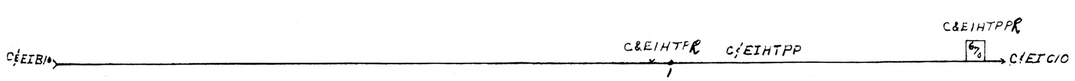

6

Tuscola, Ill SU19C

C&EIRR
RL-NRL-Lever Lock Circuits
NLS-SLS-Lock Stick Relay Circuits
P.S-Push Button Stick Relay Circuits
28WP-Relay Circuit

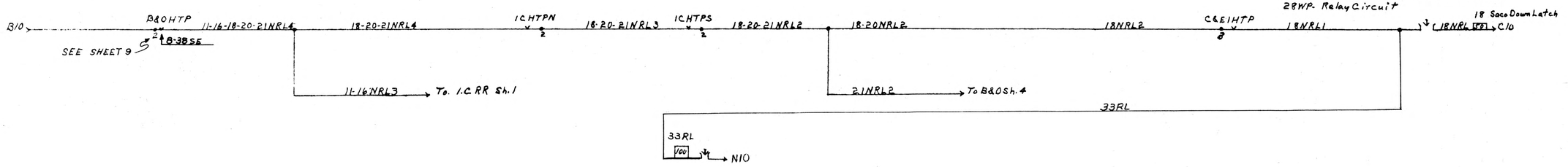

7

June 21, 1971
June 11, 1970

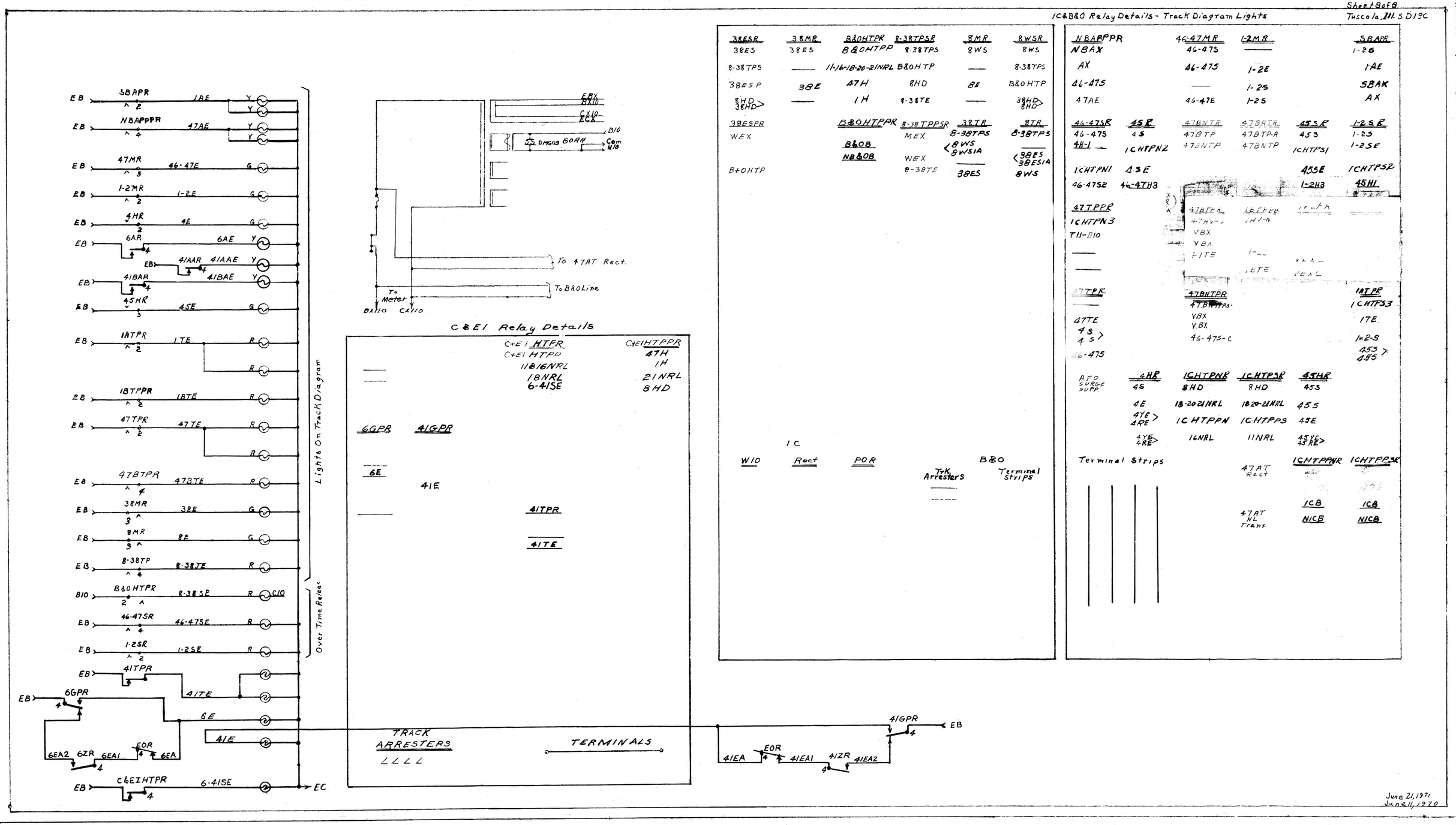
IC&B&O Relay Details - Track Diagram Lights
C&EI Relay Details
Lights On Track Diagram
Over Time Relay
To 47AT Rect.
To B&O Line
To Meter
TRACK ARRESTERS
TERMINALS
Terminal Strips
Trk Arresters
Terminal Strips
June 21, 1971
June 11, 1970

8