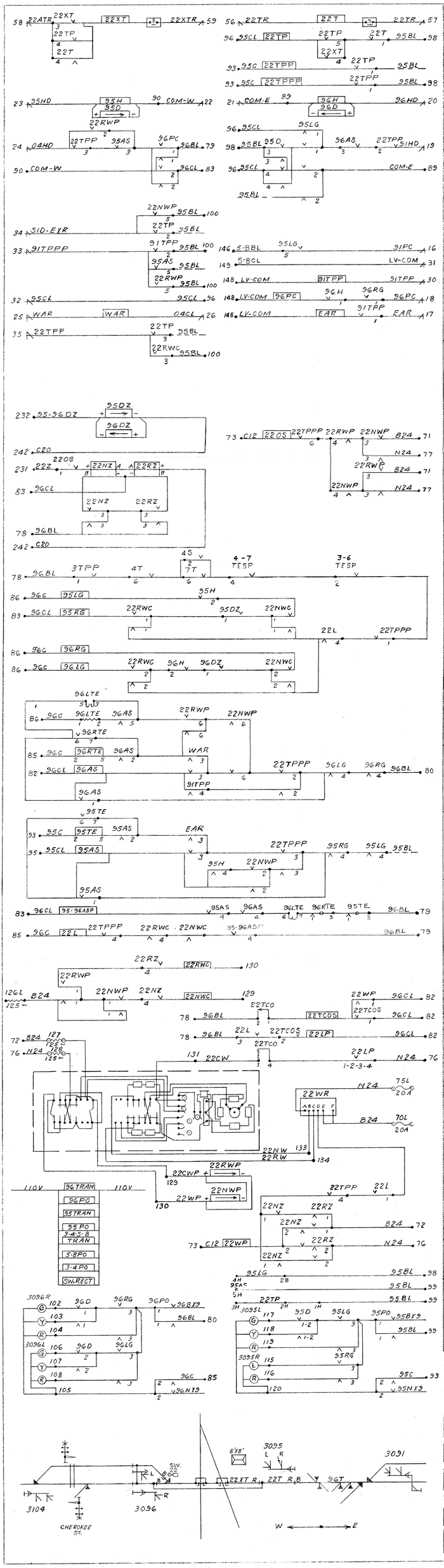
REV. 6-26-57
ACCT. CIRS REV.
7-23-57
STL. LOUIS 1-21-57
DRAWN BY R.H.B.
CHECKED
7-23-57
MO. PAC. R.R. CO.
DV. LEAVENWORTH INTLG.
INSPECTED
SERVICE
S-1531-N1
SH. 1
BT
CHEROKEE ST.
W
E

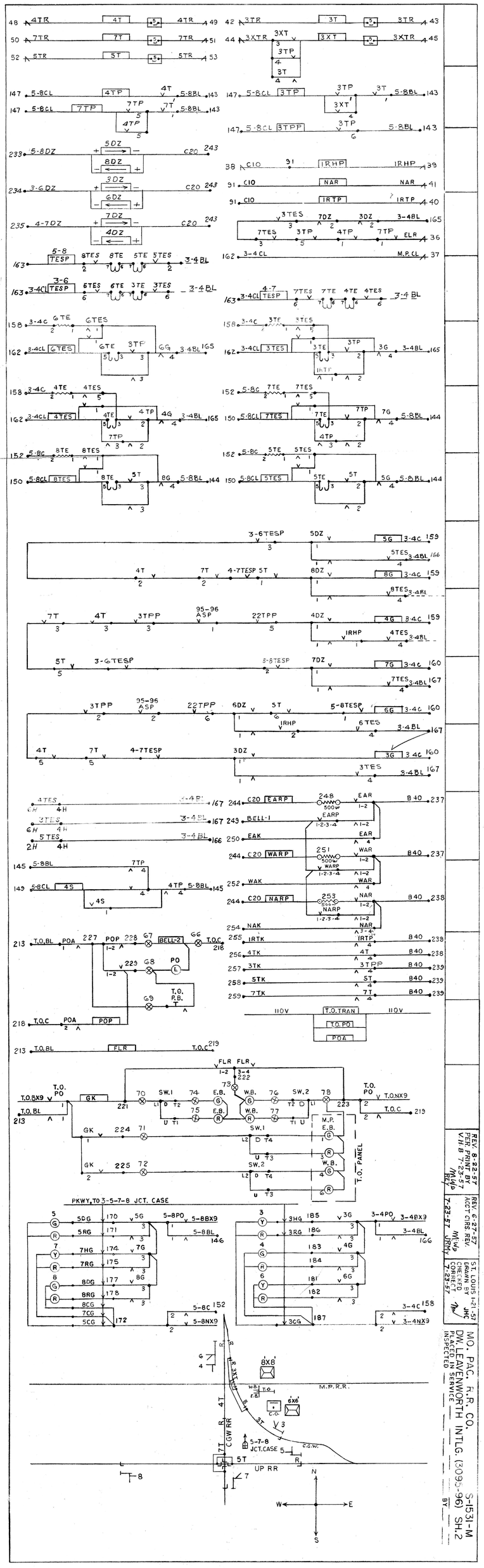

REV. 8-22-57 PER PRINT BY V.H.B. 7-23-57 MWP
REV. 6-27-57 ACCT. CIRC. REV. MWP 7-23-57 JRM
ST. LOUIS 1-21-57 DRAWN BY JRC CHECKED CORRECT 7-23-57 MWP

MO. PAC. R.R. CO.
DW. LEAVENWORTH INTLG. (309S-96) S-1531-M SH.2
PLACED IN SERVICE ____ INSPECTED ____ BY ____

REV 9-3-57
PER PRINT BY
V.H.B 7-23-57
REV

REV 6-26-57
ACCT CIRS. REV.
7-23-57

ST. LOUIS
DRAWN BY 1-21-57 J.R.M.
CHECKED
CORRECT 7-23-57
PLACED IN SERVICE
INSPECTED BY

MO. PAC. R. R. CO.
DW. LEAVENWORTH INTLG. (3095-96) SH. 3
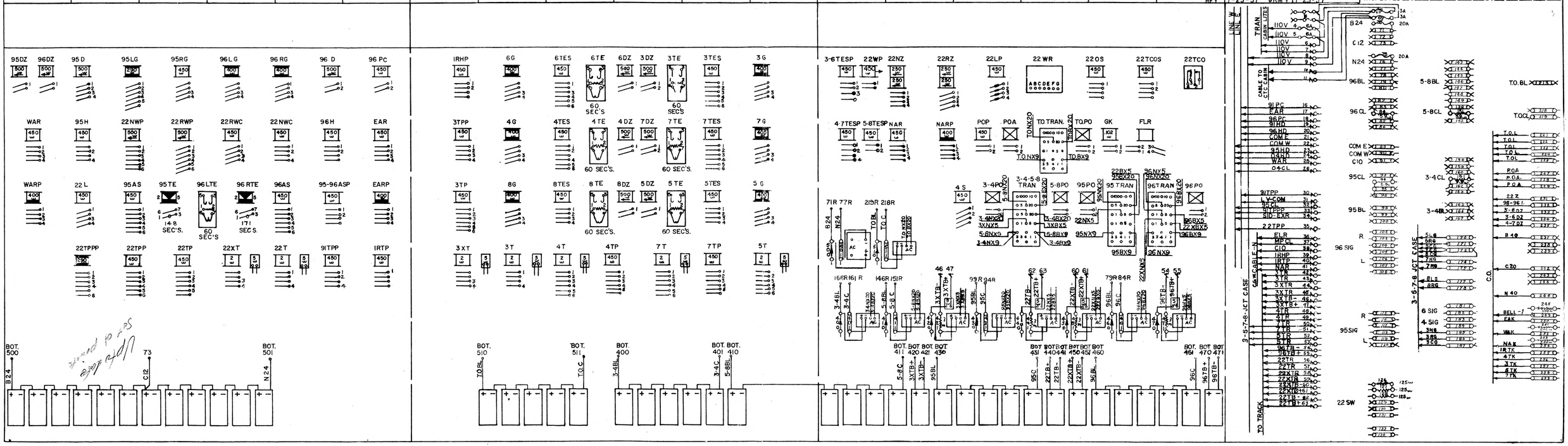
S-1531-M