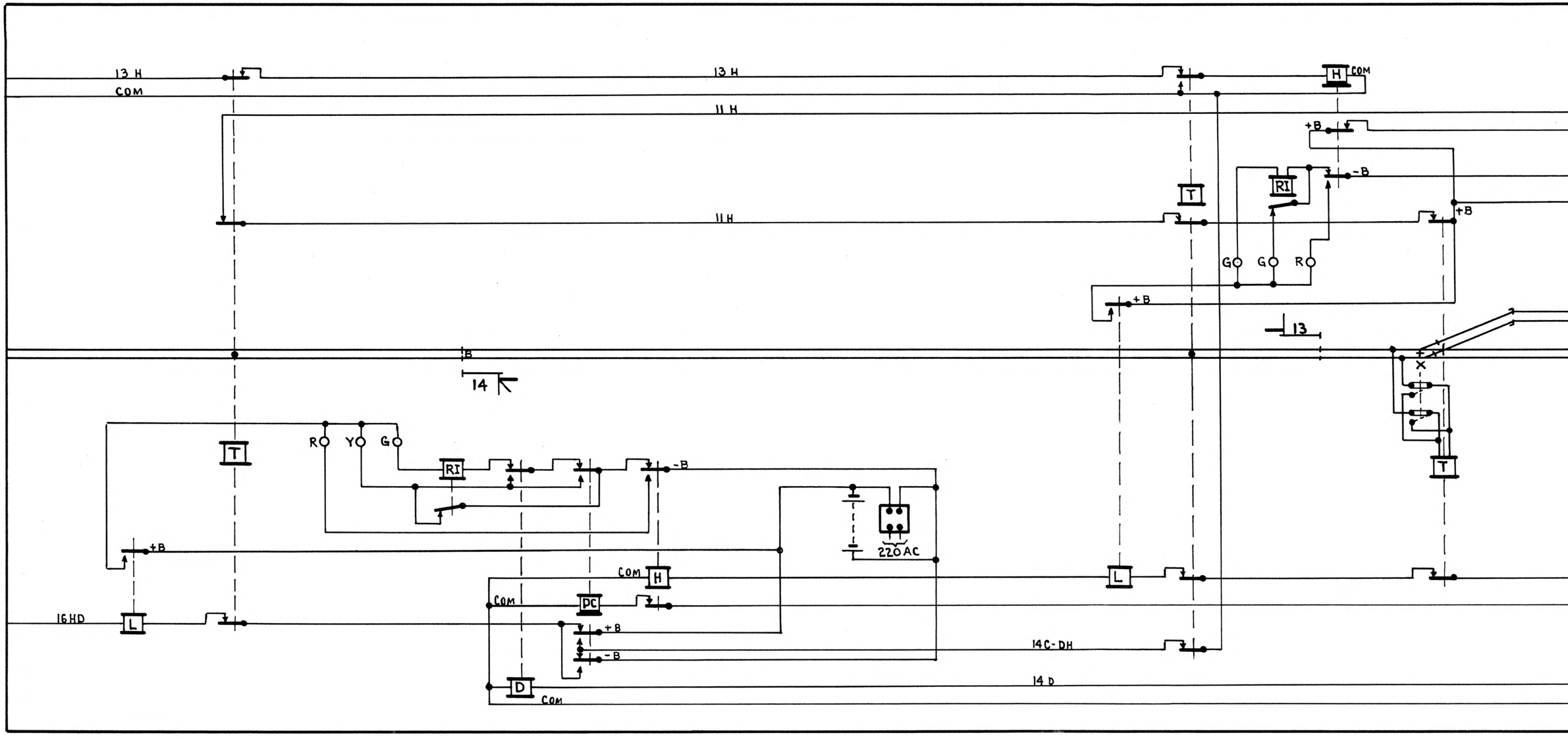
13 H
COM
13 H
H
COM
11 H
+B
-B
RI
T
+B
11 H
G
G
R
+B
13
B
14
R
Y
G
T
RI
-B
220 AC
+B
COM
H
L
COM
DC
16HD
L
+B
-B
14C-DH
D
COM
14 D
T

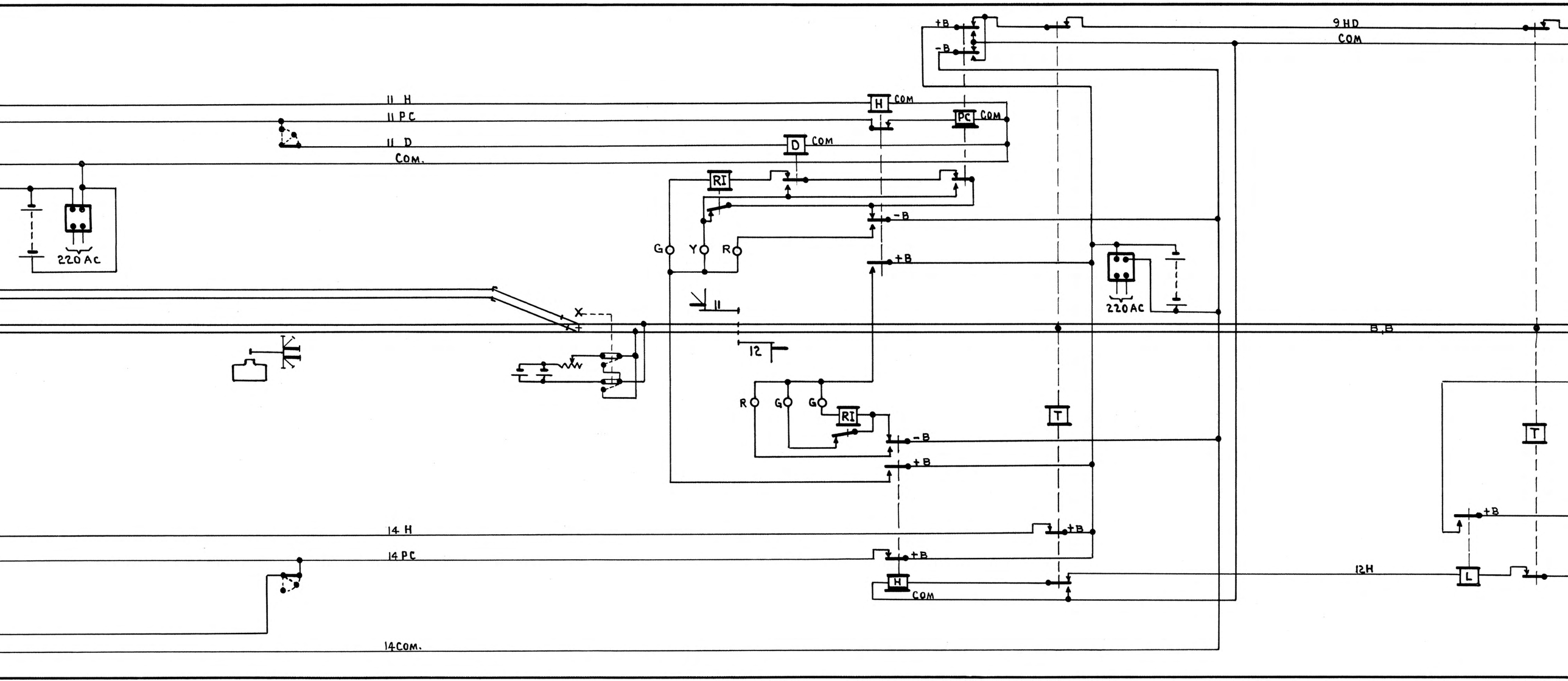
+B
-B
9HD
COM
11 H
11 PC
11 D
COM.
H
COM
PC
COM
D
COM
RI
-B
+B
G
Y
R
220 AC
X
11
12
220AC
B.B
R
G
G
RI
-B
+B
T
T
+B
14 H
14 PC
+B
+B
H
COM
12H
L
14COM.

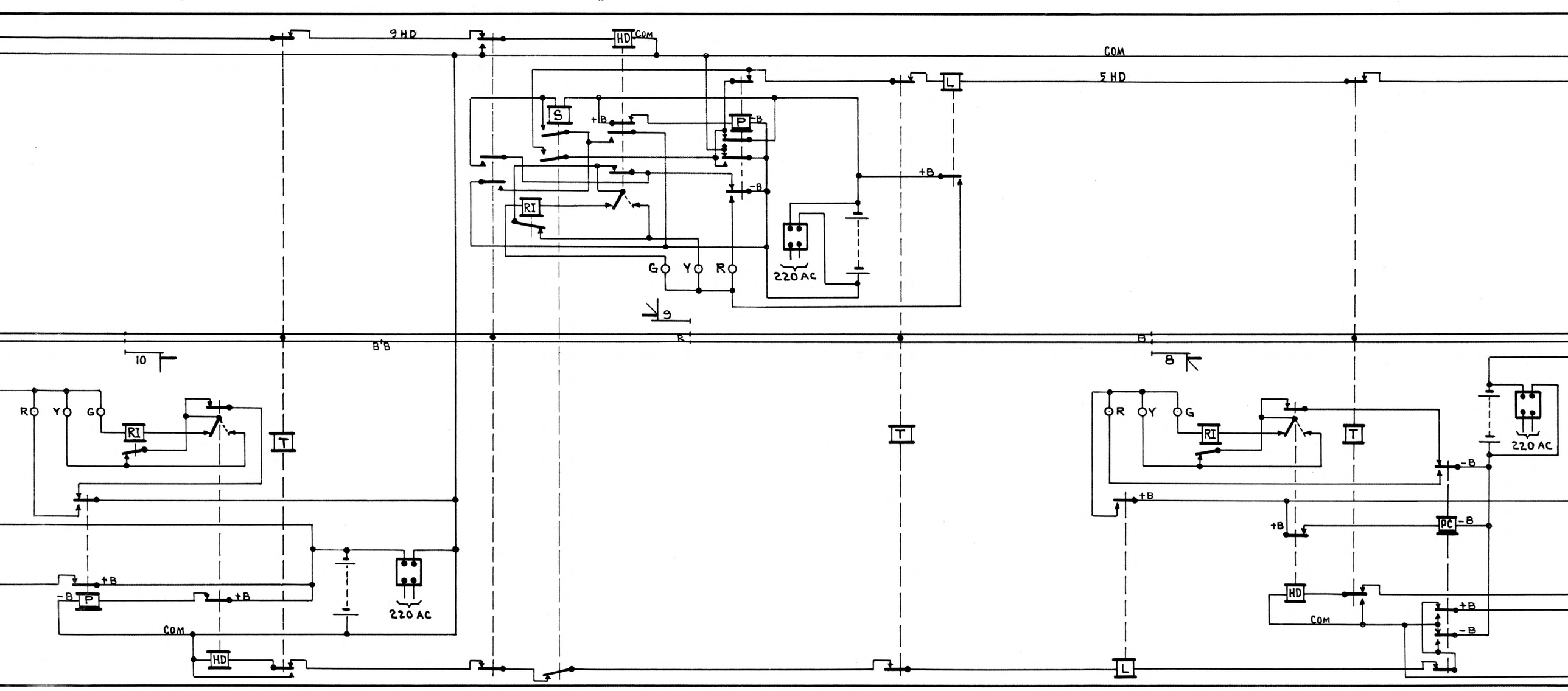
9 HD
HD
COM
COM
5 HD
L
S
+B
P
-B
+B
-B
RI
G
Y
R
220 AC
9
R
B
B'B
10
8
R
Y
G
RI
T
T
T
220 AC
-B
+B
+B
PC
-B
+B
-B
P
+B
COM
HD
HD
COM
L

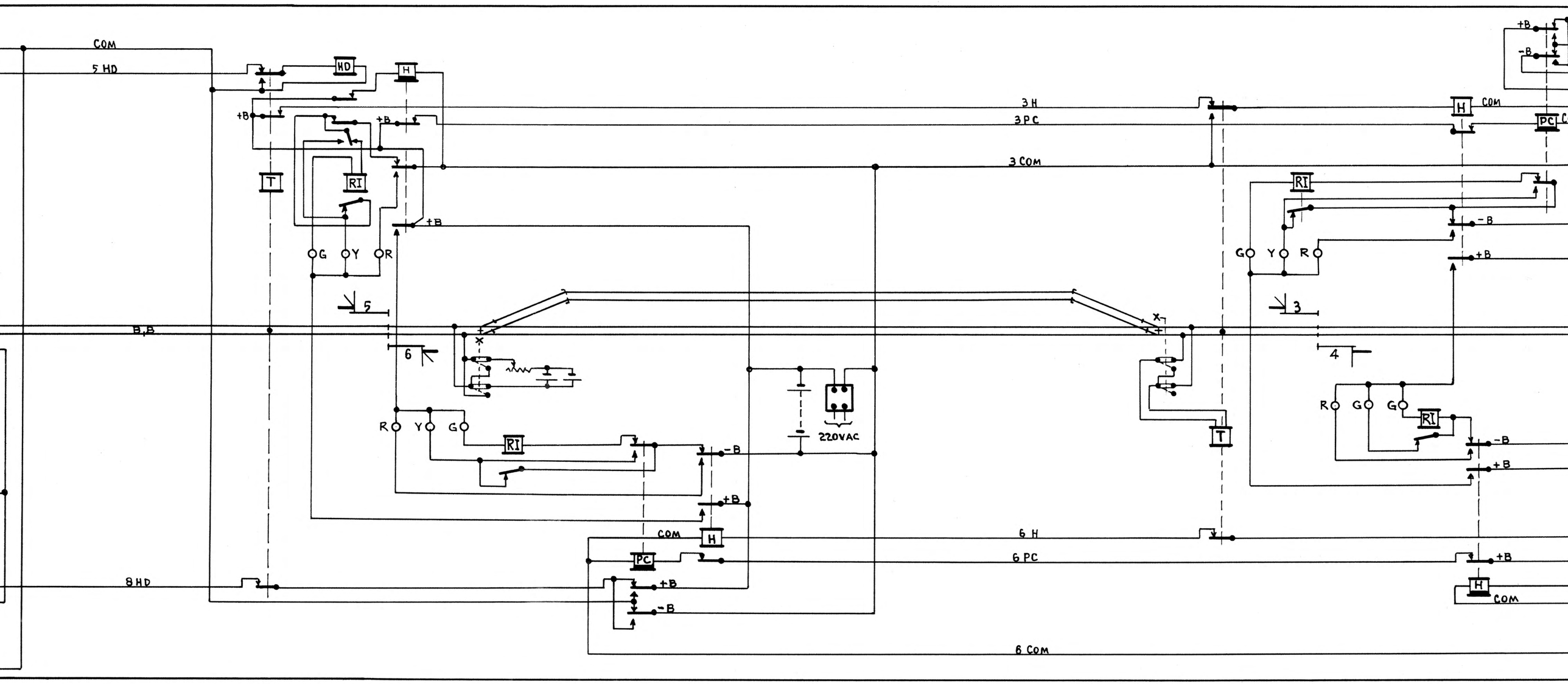
COM
5 HD
HD
H
+B
T
RI
G
Y
R
5
B,B
6
-B
COM
PC
8 HD
3 H
3 PC
3 COM
220VAC
6 H
6 PC
6 COM
3
4

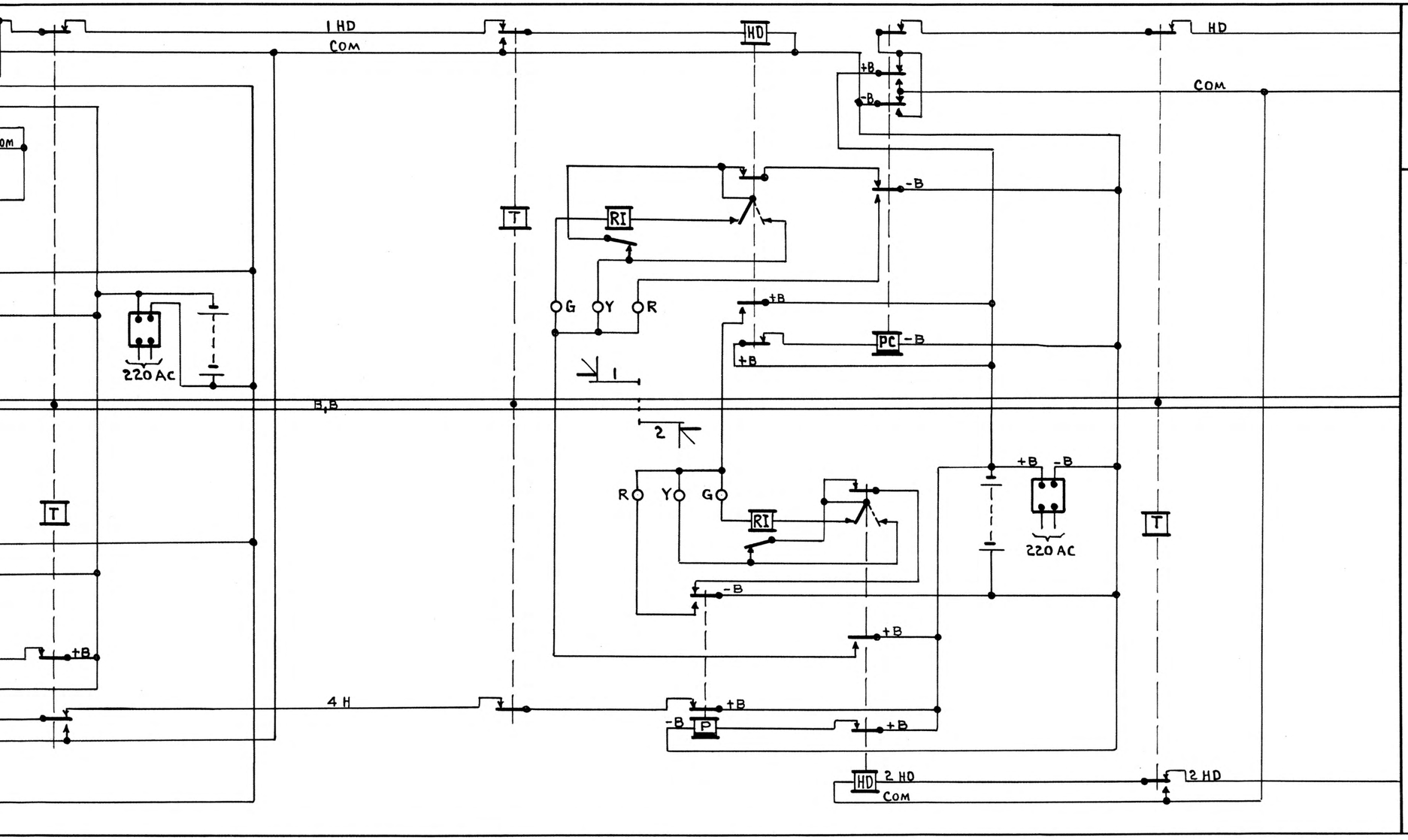

SERIES 1937 B

BB-11

N.P.RY.

TYPICAL CIRCUITS

SINGLE TRACK – OVERLAP CONTROL
D C TRACK CIRCUITS

OFFICE OF SIGNAL ENG'R. ST. PAUL, MINN.

9 - 8 - 37
11 - 30 - 37
4 - 11 - 38
7 - 5 - 38
12 - 30 - 39

CHECKED:

APPROVED:
SIGNAL ENGR.