levers in a single frame, on the fourth floor; but, after considerable study, it was concluded that the separate arrangement would best promote simplicity of operation. The minimum force of men in each cabin will be a director with one assistant and enough levermen to set the switches and signals with the requisite promptness.

The wooden cabinet which is to inclose this machine will have hinged doors for all of its openings, and these will be locked with Yale & Towne standard locks, thus affording protection against the leverman who yields to the temptation to pick an indication.

The wires which extend from the machine to the switches and signals are led out through a series of small doors at the bottom of the cabinet. These wires all start from a terminal board on which connections are so made that any lever can be disconnected and taken out quickly without disturbing adjacent levers or interfering with the locking.

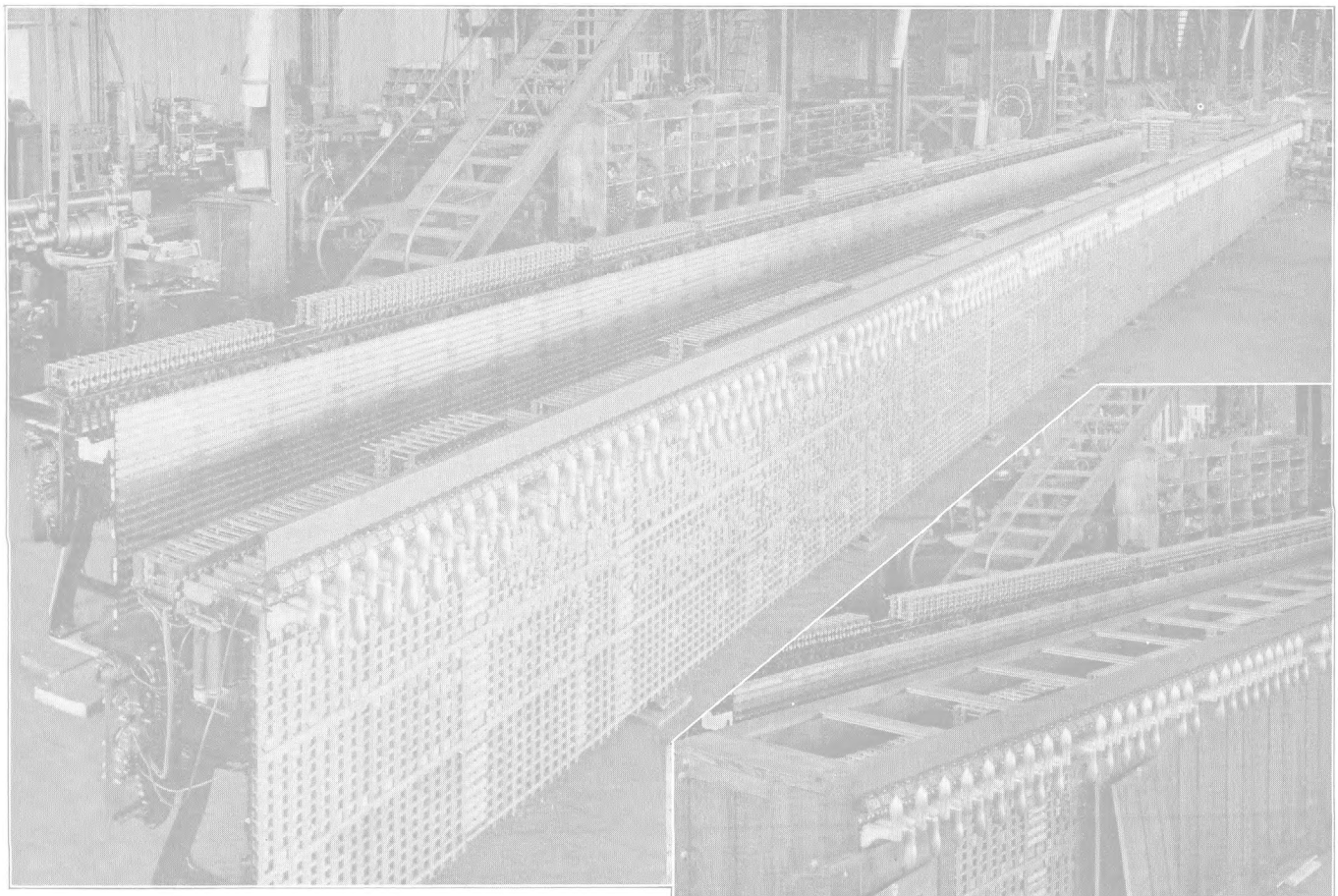

The 400-Lever Electric Interlocking Machine for the Grand Central Terminal, as It Was Set Up for Testing

This machine in station B controls the switches and signals in a territory of about 23½ acres—a yard 3,000 ft. long and 600 ft. wide, the limits of which are 55th street on the north and 43d street on the south, Lexington avenue on the east and Vanderbilt avenue on the west. South of 43d street there is an independent small cabin for the loops, one cabin for both levels. Diagrams of the tracks of these yards were published in the issue of October, 1910. Station B, when put in service, will take the place of a 68-lever electric interlocking machine of the General Railway Signal Co., which is now in use at the east side of the yard, not far from the new building. A number of the tracks controlled from this temporary cabin are not in their permanent locations, and will be superseded by others when the control is finally transferred to station B.

This will be the second permanent interlocking to be set up in the new terminal, the first having been the 144-lever machine at station U, at the entrance to the yard (57th street), which was set up about a month ago.

RESULTS OF INSPECTIONS MADE BY THE BLOCK SIGNAL AND TRAIN CONTROL BOARD.

In order to obtain data regarding the actual methods employed in handling train movements by the dispatching system, and the various signal systems in use, as well as other practices, the board has had inspections made of such methods and systems, and has investigated a number of complaints which have been received of improper methods of safeguarding train movements. It is encouraging to find that so high a percentage of train dispatchers, telegraph operators, signalmen and trainmen are intelligent, well trained and faithful. The instances of what appear to be undesirable conditions, which are cited, should not be considered as indicating the general practice. They are pointed out with a view to calling attention to inherent defects in some operating methods, and to directing the attention of those concerned to remedial measures.

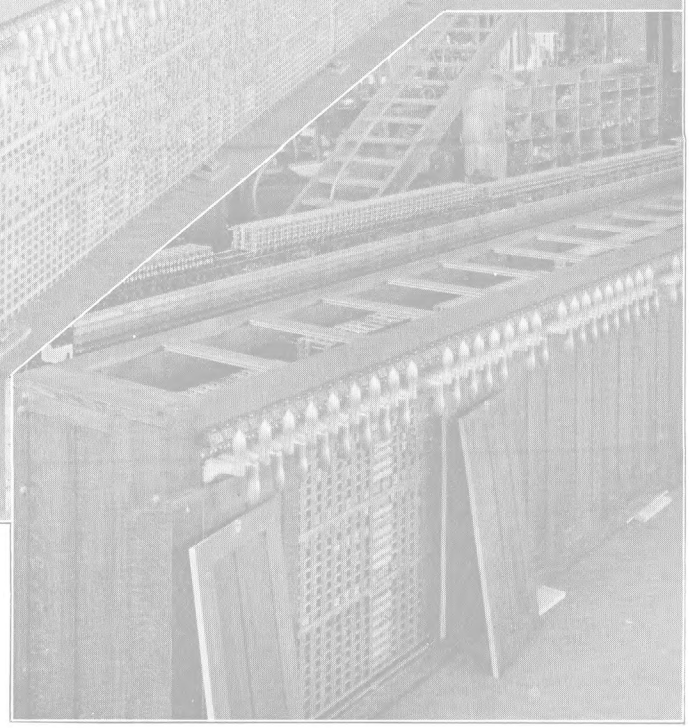

Showing the Wooden Cabinet for the Machine.

It is believed that one important source of carelessness, lack of skill, inattention to duty, and the use of loose methods on the part of employes in transportation service is due to lack of sufficient supervision and inspection. While in a number of instances the responsible officers were found to have been aware of undesirable conditions, to which their attention was called, and lacked either the courage or energy to correct them, it was more frequently found that the officers in responsible charge were overburdened with detail work and actually unable to give proper

*From the report of November, 1910, Appendix E.

attention to the inspection, and examination and testing of their men.

GROUP I.—*A. & B. R. R.*—This railroad is equipped with block signals, and its practice and personnel in most respects are excellent. On a portion of its main line, some laxity on the part of the signalmen, in returning their signals to the stop position, was noted, which, on the type of signal system employed, left a chance for errors in block working. At one point, where main tracks and a siding run under an overhead bridge, bridge warnings were provided on the two main tracks, but not on the siding, which was an important passing track.

C. & D. R. R.—Investigation indicates that a train dispatcher on this road frequently used the following method in making a meet order on single track: Assuming the stations in succession to be indicated by letters A, B, C, D, E, etc., a train at A is ordered to meet a train at D, and a train at E is ordered to meet this train at B. This, of course, constitutes a lap order, but at the same time the dispatcher puts out an order at C to hold whichever train arrives first, and makes C the actual meeting point. It is alleged that this practice was the cause of a serious collision on that road, due to the operator at C not displaying a stop signal before taking the hold order. At the time of inspection electric highway crossing bells at two stations were observed to be out of order and not ringing for the passage of trains. A facing main track switch at another station was observed to have so much lost motion that it could be opened with the foot five-eighths of an inch, head rod, throw rods and lugs being very loose. The train-order signal is antiquated and not reliable.

G. & H. R. R.—Derailing device is antiquated and unreliable. Train was observed to run over a grade crossing of another road without coming to a stop, and this is reported to be common practice on this road. In the case observed the baggageman at station gave hand signal to train.

GROUP II.—*A. & B. R. R.*—Every interlocking plant on this railroad was examined and the operation of at least 95 per cent of all its automatic signals observed in service. An inspection of 21 interlocking plants showed that no rules or special instructions to cover operation of signals at these plants had been issued, to the knowledge of the men in charge thereof. Very few of the employes were found to be provided with a copy of the rules governing operation of automatic block signals. This book contains a rule to the effect that a switch must not be opened to permit a movement to the main track when the switch indicator is at stop until protected by flag, as prescribed by the rule (Standard Code No. 99). Approximately 400 train movements from side tracks to main tracks were observed, covering a period of four weeks, and in no case could it be found that any attention was paid to the switch indicator. Seventy-five per cent of the interlocking plants inspected were either not supplied with emergency hand signals, or if provided, the night signals were not in condition for use on account of not being lighted. The practice on this road, as regards giving of hand signals at interlocking plants, rather than the use of caution cards, is considered very undesirable. Many track relays controlling the automatic block signals were found unsealed, and it was observed that signal maintainers made their own adjustments of these relays in the field.

A number of signal maintainers who were questioned said that they prefer to work for this road, rather than to go elsewhere for more pay, for the reason that inspections were infrequent and they were seldom disturbed.

On the occasion of an inspection on this road the division superintendent and several other officers approached a junction on a special train and permitted the train crew, without flag protection, to cross over from one main track to the other and proceed on to the branch after a signal had been cleared for the approach of a train on the main track which was crossed. It is not to be assumed that the rules will be obeyed by the men when such flagrant violations of them are countenanced by their officers. On a portion of this road there are many sidetracks leading by steep descending grades from industrial plants to the main line. Only about 1 in 10 of these sidetracks at the time of inspection were found provided with derails.

C. & D. R. R.—On this road a stretch of 31 miles of double track is well protected by automatic block signals, which are maintained in excellent condition, except the lights. The night indications in this territory are exceedingly poor. At the time of inspection three lights were out and many so dim as to be hardly discernible. It is believed that a considerable portion of this trouble can be easily overcome by proper adjustment of lamp brackets.

E. & F. R. R.—A freight train on this road was observed switching at an interlocking plant. During the operation the signals on the road on which the train was switching were set at stop to permit a train on the crossing road to proceed. A trainman continued to give hand signals for a back-up movement, not observing that the fixed signal of the plant was set against him, and 10 cars were backed off the track at the derailing switch, causing considerable detention to traffic.

G. & H. R. R.—At the time of inspection at an important interlocking plant there was no supply of carbon paper and the signalman had to make copies in longhand of messages, one for the engineman and one for the conductor; to avoid extra labor he kept no copy for himself. As the inspector entered the tower the second-trick signalman had just had his hand torn and considerably hurt by reason of a switch engine starting up without a signal and mounting the detector bar just as the signalman was moving it to lock a derail. No red or white hand lanterns for emergency signaling were provided. Signalman could not remember when he had a red flag, but did have a yellow one. The plant had been rebuilt, but the manipulation chart and track diagram have not been revised, so that any operator unfamiliar with the plant would be unable, from the chart or diagram, to operate the machine.

One dwarf signal was found that could only be cleared part way, and when partially cleared would not return to the stop position unless the signalman went out and restored it by hand. It was found that this signal could be cleared and the lever then placed normal, and a signal cleared to permit a move in the opposite direction on the same track.

At an important yard a switch leading to the main track is controlled by an electric lock from a signal station. No padlock is provided on the electric-lock case, and on the two occasions when inspected the cover was found partly off and in such a position that the lock could readily be "picked" by hand and the switch opened without regard to any control from the tower from which it was supposed to be governed.

GROUP V.—*E. & F. R. R.*—On this road the operators in general are good, although a number of them have never been examined on the rules. Many offices were not supplied with signals as required by rules, such as red lamps and flags, torpedoes and fusees. At one station a farmer's lantern was being used in the semaphore as a signal lamp. Operator had to climb post to ascertain whether or not the lamp was burning.

G. & H. R. R.—On this road a bad practice in reporting signal failures exists, which has been found to be in force elsewhere. A signal failure is not reported as such unless it has caused a train detention, or is likely to be reported by someone other than the person in charge. Of the interlocking plants on this road there are few that are provided with circuit plans, and in no case were these plans found to be correct. Absence of emergency hand signals, especially red lanterns properly filled, trimmed, and lighted, and placed ready for use in signal stations was frequently noted.

A signal repair foreman complained that he had very hard work to keep 5 men in his gang, his book showing that in the past year he has had 150 men on his roll. He could not keep them on account of low wages ($1.35 a day). A recent increase of rate to $1.50 a day has given him reason to hope that he can obtain a better grade of men and keep them longer than had heretofore been possible.

At one interlocking plant found to be in poor condition, the red roundel and the lens in the lamp of a dwarf signal on an important connection were missing, and had been missing for so long that trainmen passing at night had formed the habit of going ahead and looking at the switch and derail by the light of

their lanterns to learn their position before making the move. Some interlocking plants are reported as being exceedingly dirty, especially the towers themselves; some were filthy and insanitary. It has been observed through all inspections that as a rule a clean plant works well and safely, whereas at a dirty one the apparatus is likely to be ill kept, and frequently in far from safe condition.

At an interlocking plant protecting a crossing between this road and another the following points were noted: One derail locks when three-eighths inch open; another locks when seven-eighths inch open; signals move only about half their proper stroke. One train was observed to pass the home signal at this plant with the blade only about 5 deg. below the horizontal. Investigation showed that the signal lever could be operated while yet the signal arm would not operate on account of fouling and improper adjustment of pull and back wires. At another interlocking plant the combined manipulation chart and track diagram was found to be incorrect. Two electric locks were out of service, and jumpers placed around the contacts in both screw hand releases.

GROUP VI.—*A. & B. R. R.*—One of the features particularly noted in an inspection of this road was that while automatic signals are provided on double track the protection on the stretches of single track intervening was much less complete. On a considerable portion of it a controlled manual block system had been in use for some time, but had been abandoned. In an automatic-signal installation, provided in certain suburban territory, at one station a dead space of approximately 1,000 ft. on both north-bound and south-bound main tracks is left without track circuit.

One automatic signal was noted during inspection which was out of service on account of a defective insulated track joint. The signal had been out of service at that time for five days. Another automatic signal was reported as having been out of service for 11 days. It was alleged that the signals remained out of service for this length of time on account of the failure of track department to co-operate with the signal department in making repairs.

Surprise checking of enginemen, in their observance of signal indications, though but infrequently made during the past two years, had been revived and at the time of this inspection was being frequently made, and was found to be producing a good effect. The inspector observed a train of 65 cars pass over a railway crossing, without stopping, at an estimated speed of 10 miles an hour. In this case the view of the engineman was obstructed by another train standing at the station, so that he could not see more than 100 feet ahead of him to the crossing. The operator on duty at this station informed the inspector that this is a common occurrence, notwithstanding the law of the state, which requires trains to come to a stop before passing over a crossing and give a prescribed whistle signal.

C. & D. R. R.—On this road, as on a number of others in this group, distant signals at various interlocking plants were found to be out of service. Another plant was found to be out of service on account of a derailment, due to misunderstanding by a freight conductor of hand signals given from signal tower by the signalman. The use of the caution card, instead of a hand signal, on this occasion, would doubtless have prevented this derailment, which caused heavy damage to the plant. The inspector comments favorably on the very complete use of seals at a power-interlocking plant on this road to detect improper interference with the interlocking machine or the release. The use of these seals had led to a great improvement in the matter of "picking" or "plugging" indications on electric interlocking machines.

NEW YORK CENTRAL SCREW LOCK.

The screw lock fastening for signal apparatus cases, which is used by the New York Central, is shown in the diagram. This device was designed by S. P. Hull. It has proved very satisfactory in use, and is reasonable in cost, being much less expensive than the ordinary brass padlock.

The key is made of brass and is nickel-plated, the lock screw is made of brass also, and the right and left halves of the lock itself are made of cast iron to the dimensions shown.

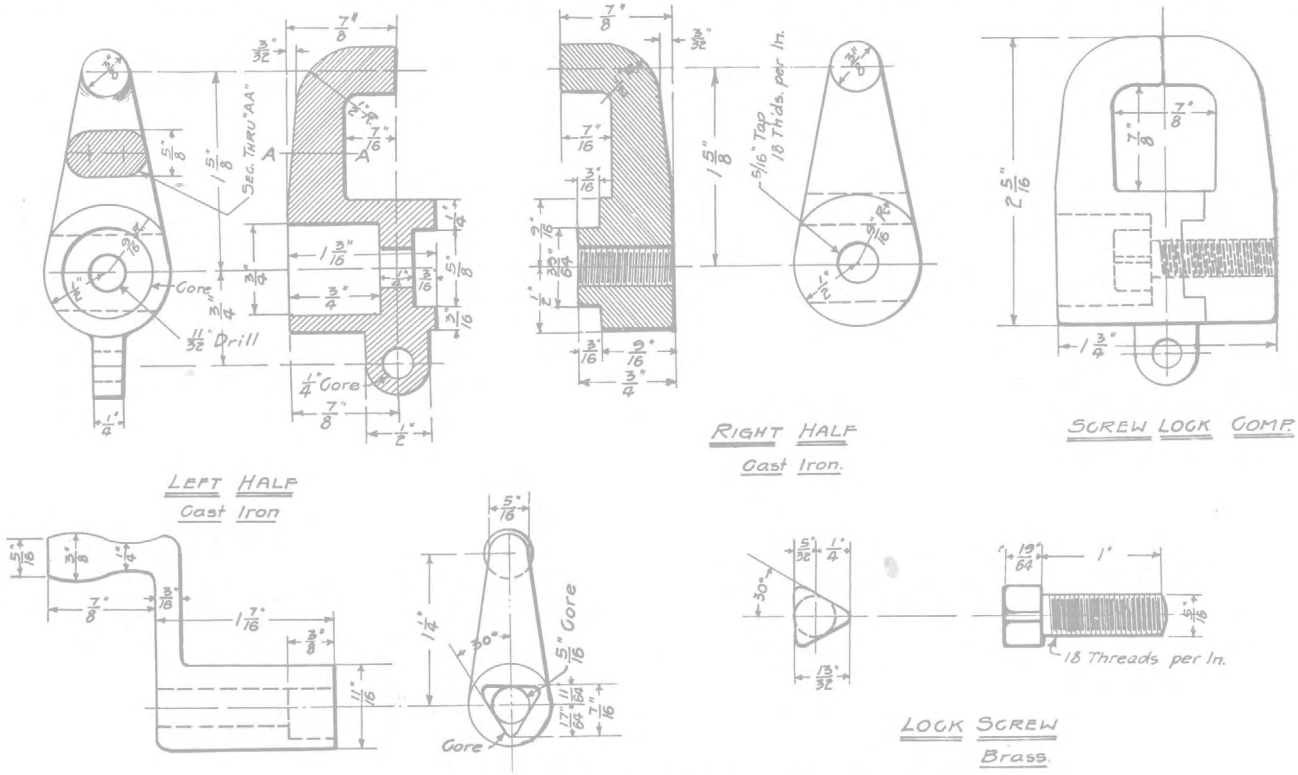

Details of the New York Central Screw-Lock Fastening.

THE SIGNAL DEPARTMENT of a western road uses a double circle as a conventional sign for battery wells. The inner circle contains the makers' reference letter, indicating the particular kind of well that is installed.