Standard Outline Bill of Mechanical Material

For Ordering All Apparatus Necessary to the Construction of Mechanical Interlocking

A

Adjustable clamps for circuit breaker 252
Adjustable link 251
Adjusting screws, pipe..... 251
Adjusting screws, wire..... 251
Aerial cable 254
Anchor bolts 256
Arresters 253
Arrester boxes 254
Asbestos 258

B

Back wheels 251
Back spectacle tins..... 258
Base plates 254
Battery 253
Battery connectors 253
Battery chute 252
Battery wells 253
Battery, primary 253
Black oil, strained..... 255
Blacksmiths' coal 258
Black paint 255
Black fibre tags..... 253
Black pipe (1 in. and ¾ in. interlocking) 257
Block phone 258
Blued screws 256
Blue paint 255
Blue vitriol 253
Boiled oil 255
Bolts 256
Bolts, eye 257
Bolt, fibre bushing..... 253
Bolt locks 251
Bolts, lug 251
Bolts, "U"..... 258
Bond plugs 257
Bond wires 258
Boot leg tins..... 258
Boot leg wires..... 258
Box adjustment 251
Boxes, oil, pipe (2 in.)..... 258
Boxes, relay, for signal pole 252
Boxes, stuffing wire..... 258
Bracket shelf 257
Brass screw 256
Bright wood screw..... 256
Bridge signals 250
Bushing, conduit 254
Bushing, bolt 252
Butt hinges 257
Buttonhead rivets 256
Bushing, hard rubber..... 252

C

Cantilever 250
Cantilever lamp 257
Cable 254
Candle wick 258
Capping .....
Carpet tacks 256
Cast arm (for circuit breaker) 252
Caustic soda battery..... 253
Ceiling 254
Cement 253
Channel pins 257
Chain 258
Checknuts 254
Chute 252
Circuit breaker arm 252
Circuit breaker rod 252
Circuit controller for machine and signal..... 252
Clamps (adjustable for circuit breaker) 252
Clamps (for pipe carriers) 252
Cleats, porcelain 257
Clips, detector bar..... 251
Coal, blacksmiths' 258
Coal oil 255
Common pine 253
Compensator 251
Combination rail clips..... 251
Conduit, fibre 258
Conduit and fittings..... 254
Concrete material..... 253
Contacts for ..... signals. 250
Connector, battery 253
Concrete battery well..... 253
Connecting rod (for circuit breaker) 252
Condulets 254
Controller for machine and signal 252
Condenser 258
Copper bond wires..... 258
Copper wire 254
Cotter pins 256
Countersunk rivets 256
Couplings 254
Couplings for interlocking pipe 257
Crank, horizontal 250
Crank, legs 258
Crank, tee 251
Crank, vertical 250
Crank, watertight 251
Crushed rock 253
Cut washers 256

D

Deflecting bars 250
Derails 257
Derail lugs 251
Derail lock-rod 251
Derail rods 257
Detector bars 251
Driving piece 251
Dwarf signal 250
Dry battery 253

E

Electric locks 252
Elbows, conduit 254
End journal 250
Engine oil 255
Emery paper 258
Eye bolts 257
Eyes, wire 251

F

Feet, switch and derail..... 251
Fence staples 258
Fibre conduit 258
Fibre, red, 1-32-in..... 258
Fibre bolt bushing..... 253
Fibre sole plates 253
Fibre tags, black..... 253
Flanges 258
Flat-head screws 256
Floor flanges 258
Flux, soldering..... 258
Foundation (pipe carriers). 253
Form lumber 253
Friction tape 258
Front rods 251
Front wheels 251

G

Gage plates 257
Galvaduct 254
Galvanized iron wire..... 254
Galvanized black pipe (1 in. and ¾ in. interlocking).. 257
Garden hose 258
Gasoline 256
Gas engine oil..... 256
Giant strain insulator..... 257
Glasses 257
Graphite paint 255
Gravity battery 253
Green glass 257
Guides, derail 257

H

Half and half solder..... 258
Hand releases 257
Hasps 257
Hinges, butt 257
Hinge hasps 257
Horizontal deflecting bars.. 250
Horizontal cranks 250
High bearings 250
Hose 258
Hard rubber bushing..... 252

I

Indicator relays 252
Inside bars 251
Insulated rods 251
Insulated rail joints..... 253
Interlocking machine..... 249
Iron 257
Iron bond wires 258

J

Jaw, 1¼ in..... 251
Jaw, 1-in. solid..... 252
Jaw, screw, 1-in..... 252
Jaw, wide 251
Joints, Weber insulated.... 253

K

Kerosene 255

L

Lag screws 256
Lamp black 255
Lamp cord 254
Lamp 257
Lard oil 255
Lazy jack compensator..... 251
Leg, crank and wheel..... 258
Length of rockershaft..... 250
Lightning arrester boxes... 254
Lightning arresters 253
Line relays 252
Line wire 254
Lock rod 251
Lock nuts 256
Lug bolts 251
Lug, derail and switch..... 251
Lugs, pipe 251
Lumber 253

M

Machine bolts 256
Machine, Saxby & Farmer. 249
Marlin 258

N

Nails 256
Nipples, conduit 254
Nut locks 256

O

Offset arms (for rocker shafts) 250
Oil 255
Oil pipe, 2-in..... 257
Oil pipe stuffing boxes, 2-in. 258
Oil pipe plunger 251
One-wire cleats 257
Outlying switch locks..... 252
One-arm pipe connected signals 250

P

Packing 258
Padlocks 257
Paint 255
Pale semaphore oil..... 255
Pipe plug, 2-in..... 257
Pipe plug (interlocking).... 257
Pipe tees (interlocking).... 258
Pipe couplings (interlocking pipe) 257
Pipe rivets 257
Pipe straps 254
Pipe carrier foundations.... 254
Pipe carriers 252
Pipe carriers, transverse... 251
Pipe to wire lug..... 251
Pipe adjusting screw..... 251
Pipe lugs 251
Pipe-connected signals 250
Pipe straps 254
Pitch 258
Pins, channel 257
Plugs, 2-in. pipe 257
Plugs, 1-in. pipe 257
Plugs, bond 257
Plungers for oil pipe..... 251
Plunger casting and plungers 251
Porcelain cleats 257
Potash battery 253
Post for relay box..... 252
Power dwarf 250
Power signals 250
Pole changer (for Style —)
Proof chain 258
Purple glasses 257
Putty 255

R

Rail clips 251
Radial arms 251
Resistance units .....
Red fibre 258
Reinforcing iron 258
Red glasses 257
Red paint 255
Retaining wall material... 253
Release, electric 252
Relays, indicator 252
Relays 252
Relays, box for signal post. 252
Relay box and post for concrete 252
Releases, mechanical..... 249
Rivets 256
Round iron 258
Rods, Nos. 1 and 2..... 257
Rods for circuit breaker... 252
Rockershaft arms 250
Rockershaft end journals and high bearings..... 250
Rockershafts 250
Round-head screws..... 256
Rubber tape 258
Rubber bushing, hard..... 252

S

Sand 253
Sawed ties 253
Saxby & Farmer machine.. 249
Screws 256
Screw adjustment 251
Screw jaws, 1-in..... 252
Screw jaws, 1¼-in. 251
Screw, lock rods..... 251
Screw, lug 251
Screw, pipe adjusting..... 251
Screw release, electric..... 252
Screw, wire adjusting..... 251
Semaphore oil 255
Semaphore wire 254
Shelf brackets 257
Shingle nails 256
Signal 250
Signal department padlock 257
Slots 251
Slow-speed mechanical release 249
Soap 258
Soapstone 258
Solder 258
Soldering flux 258
Sole plates 253
Solid copper wire 254
Solid jaws, 1-in. 252
Solid jaws, 1¼-in. 252
Split link 251
Staples 258
Stakes 254
Steel semaphore wire..... 254
Straight arms for rockershaft 250
Strap iron 257
Strain insulators..... 257
Stranded wire 254
Stuffing box, wire..... 258
Stuffing box for oil pipe... 258
Switch boxes 252
Switch locks, outlying..... 252
Style — contacts and pole changers 250
Style — signals..... 250

T

Tacks, carpet 256
Tags 253
Tape, rubber 258
Targets for Hayes derails. 257
Tarred marlin 258
Tee cranks 251
Tees, two-in. pipe..... 258
Telephone 258
Three-arm pipe-connected signal 250
Three-position signal..... 250
Ti Ki paint 255
Ties 253
Tie wires 254
Tins, bootleg 258
Tins for back spectacle.... 258
Top plates and wedges....
Track relays 252
Transverse pipe carriers... 251
Treated pine 253
Treated ties 253
Trunking 254
Tubs 253
Turpentine 255
Two-arm pipe-connected signal 250
Two-position signal..... 250
Two-way terminal 252

U

"U" bolts 258
Units, resistance..... 258

V

Verona nut locks..... 256
Vertical cranks 250
Vertical deflecting bars..... 250
Vertical wheels 251
Vitriol 253

W
Washers 256
Waste 258
Water-tight cranks 251
Weber joints 253
Wells, battery 253
Western Union terminal boxes 258
Wheel legs 258
Wheels, chain 251
Wheels, vertical, front and back 251
White paint 255
White pine 253, 254
Wick, candle 258
Wide jaw 251
Window catches 257
Wire 254
Wire adjusting screw 251
Wire carriers 253
Wire carrier stakes..... 254
Wire carrier stands 253
Wire cleats 257
Wire-connected dwarf 250
Wire eyes 251
Wire nails 256
Wire stuffing box 258
Wood screws 256
Y
Yellow glasses 257
Yellow paint 255

INTERLOCKING MACHINE.

Order One:.....lever Saxby and Farmer interlocking machine for (vertical) (horizontal) leadout, with....levers for pipe connections,....levers for wires,....levers for power signals, and....spare levers or spaces. Machine to be fitted with.... Model....slow-speed mechanical hand release No. (Give catalogue reference.) Weight.....17 lbs., and....Model....four-circuit electric locks with releasing bars and fittings on levers No.....and No..... Locks to be wound to 200 ohms resistance No....., weight (Lock).....45 lbs. Machine to have brackets in at least alternate spaces. All bolts and small parts to be securely boxed.

NOTE: Where possible have enough spare spaces in machine to cover future developments. Machine requires one electric lock and one slow-speed mechanical release per parallel route. If more than one facing point lock is involved in each main-line route key levers may sometimes be used to advantage, thus doing away with additional electric locks. Signaled and numbered track plans must be sent to signal engineer's office promptly for check and transmission to signal company. Each outlying switch lock lever requires a Model.... electric lock without releasing attachment.

Order Sizes as Follows:—Four-lever, eight-lever, 12-lever, 16-lever, 20-lever, 24-lever, 28-lever, 36-lever, or 48-lever machine; allowing proper number of spare spaces for the size required. The weight per lever is.....250 lbs.

NOTE: When Model....locks with releasing bars must be located on adjacent levers, one lock must be equipped with "four-circuit" controller and the other with "six-circuit."

SIGNALS.

Two-Arm Pipe-Connected:—Two-arm pipe-connected home signals No. ....., except with guides, tanged jaws and tanged eye-rods for one-in. up and down rods and with spectacle No....., but without rods. Weight.....1,038 lbs. Order as needed.

NOTE: Used only for signaling diverging main lines and from main line to passing track.

One-Arm Pipe-Connected:—One-arm pipe-connected home signals No. ....., except with guides, tanged jaw and tanged eye-rod for one-in. up and down rod, and with spectacle No..... but with no up and down rod. Order as needed.
Weight.....875 lbs.

NOTE: If there is to be but one route signaled, a two-arm signal should be erected and lower arm not operated.

Power Signals:—Style....single-arm three-position upper-quadrant power signals, with double case. Mechanism case to be tapped for 1½-in. conduit, and to be plugged. Order as needed. Weight.....1,525 lbs.
Style...., single-arm two-position 60-deg. lower-quadrant power signals, with double case. Mechanism case to be tapped for 1½-in. conduit, and to be plugged. Order as needed, specifying blade. Weight.....1,525 lbs.
Style...., double-arm power signal with top arm three-position and lower arm two-position 0 to 90 deg. upper-quadrant, with double case. Mechanism case to be tapped for 1½-in. conduit, and to be plugged. Order as needed. Weight.....1,796 lbs.
Style...., two-arm power signal, both arms three-position, with double case. Mechanism case to be tapped for 1½-in. conduit, and to be plugged. Order as needed. Weight.....1,796 lbs.
Style...., one-arm three-position bridge signal. Order as needed. Weight.....905 lbs.
Style...., one-arm two-position 60-deg. lower-quadrant bridge signal. Order as needed, specifying blade. Weight.....905 lbs.
Style...., two-arm bridge signal, top arm three-position, lower arm two-position 0 to 90 deg. upper-quadrant. Order as needed.
Weight.....1,270 lbs.
Style...., two-arm bridge signal, both arms three-position.

NOTE: Two-position signals are to be arranged so that they can be changed to three-position later. Power signals are to be used at interlockings in automatic territory in preference to pipe-connected and slotted signals; and to be used, also, when pipe-connected signals are inexpedient for any reason. Power signals are always to be used when it is necessary for interlocking signals to be three-position. Unless otherwise specified, Style...., two or three-position signals are equipped only with necessary circuit breaker for their own control. Before ordering determine number and type of extra contacts needed and give full information on requisition. Extra contacts are of three kinds, viz., slot-arm, pole-changer, and separate controller.

Dwarf Signal:—Wire-connected:—One-arm dwarf signal No...., with front spectacles, No...., and with wooden blade, and without lag screws. Order as needed as per drawing.....
Weight.....105 lbs.

NOTE: If it is inexpedient to use wire-connected dwarf signals on account of platforms or for other reasons, order as follows:

Dwarf Signals:—Power:—One-arm dwarf signal, 10-volt, slot-arm type.

Cantilevers:—Cantilever No...., without lamp bracket. Order as needed. Weight.....125 lbs.

NOTE: Cantilevers are to be used only where it is impossible to have tracks swung to 17-ft. centers or more. As a rule it is preferable to use signal bridges. If it is necessary to use bracket posts or bridges, signals must be ordered accordingly.

GROUND WORK,—LEADOUTS.

Rocker Shaft Leadouts:—Rocker shafts are to be used only with a vertical machine and where pipe line is on same side of tracks as tower.

Rocker Shafts:—Two-in. rocker shafts....ft. long. No..... Order as many rocker shafts as there are pipe-connected levers in the machine. (This, of course, assuming that the leadout is not mixed shaft and crank.) Lengths of rocker shafts are as follows:

For 14 ft. x 17 ft. 0 in. towers.....11 ft. 0 in.
" 14 ft. x 20 ft. 3 in. towers.....11 ft. 7 in.
" 14 ft. x 23 ft. 1 in. towers.....11 ft. 10 in.
" 14 ft. x 25 ft. 8 in. towers.....12 ft. 6 in.
" 14 ft. x 28 ft. 8 in. towers.....12 ft. 11 in.
" 14 ft. x 31 ft. 5 in. towers.....13 ft. 2 in.
" 56-lever machine .....13 ft. 4 in.
" 60-lever machine .....13 ft. 7 in.
" 64-lever machine .....13 ft. 11 in.
" 16 ft. x 37 ft. 0 in. tower.....14 ft. 3 in.

Two-Way High Bearings:—Two-way high bearings with caps and end journals No..... Order one per pair of shafts when shafts are adjacent. Weight.....54 lbs.
Two-way high bearings with caps and intermediate journals No.... Order two per pair of shafts when shafts are adjacent. Weight.....54 lbs.

One-Way Bearings:—One-way high bearings with caps and end journal No.... Order one per odd shaft when shafts do not pair out even. Weight.....25 lbs.
One-way high bearings with caps and intermediate journals No.... Order two per odd shaft where shafts do not pair out even. Weight.....25 lbs.

End Journals:—End journals No.... Order one per shaft, for bushing through concrete foundation wall. Weight.....3½ lbs.

Straight Arms:—Straight arms for square shafts No.....

Order one per shaft, ordinarily. When pipe runs both ways order two. Weight.....12 lbs.

Offset Arms:—Offset arms for square shafts No..... Order one per shaft. Weight.....12½ lbs.

DEFLECTING BAR LEADOUT.

Horizontal Deflecting Bars:—Horizontal deflecting bars 90 deg. No..... Order as many as there are levers to operate switches, derails, locks or pipe-connected blades. If machine is horizontal, order one deflecting bar per dwarf. Weight.....37 lbs.

NOTE: If deflecting bar leadout is used, deflecting bars should take the place of cranks in the ground work except for the last turn, for the function should be ordered accordingly in addition to what is specified above. Multiple-unit deflecting bars can be obtained for 90 deg. as specified above and in addition for 22½ deg., 45 deg., and 67½ deg., if necessary.

Vertical Deflecting Bars:—Vertical deflecting bars No..... Order as many as there are levers to operate switches, derails, locks, or pipe-connected blades. Weight.....45 lbs.

CRANKS.

Two-Way Horizontal Cranks:—Two-way horizontal cranks, same as No...., except to have 11¾ in. x 11¾ in. and 14½ in. x 14½ in. cranks. Order as needed, bearing in mind that a switch or derail and its lock must not be placed on same two-way crank. Weight.....48 lbs.

One-Way Horizontal:—One-way horizontal cranks No..... Order as needed in pipe run and leadout. In addition to what are needed above, each switch or derail requires one extra, and if two bars are on one switch still another crank is needed. Order also two extra for each outlying switch lock. Weight....30 lbs.

Two-Way Vertical:—Two-way vertical cranks, same as No...., except with 11¾ in. cranks. Order as needed in tower, bearing in mind that switch or derail and its lock must not be placed on same two-way crank. Weight.....81 lbs.

One-Way Vertical:—One-way vertical cranks, same as No...., except with 11¾ in. crank. Order as needed in tower. Weight.....42 lbs.

Compensators:—One-way compensators, same as No...., except with 12 in. x 12 in. arms. Order one compensator for each pipe more than 60 ft. and less than 800 long. For pipe line more than 800 ft. long order two compensators. When one pipe operates two functions more than 60 ft. apart, order an extra compensator. Each outlying switch lock requires one compensator. Weight.....80 lbs.

SWITCHES, DERAILS AND LOCKS.

Box Adjustments:—Box adjustment No...., except with rod No.... Order one per switch or split-point derail.
Weight.....32½ lbs.

Insulated Rods:—Insulated rod with tanged ends, No.... If no bars, order one per switch or derail, and one per plunger. If bars, order one per switch or derail and one per bar.
Weight.....18 lbs.

Radial Arms, One-Way:—One-way radial arms No.... Order as needed for obtuse angles in pipe lines. Weight.....28 lbs.

Radial Arms, Two-Way:—Two-way radial arms No...., except to have 11¾ in. and 14½ in. arms. Order as needed for obtuse angles in pipe lines. Radial arms may be used for any deflection up to 22½ deg. Weight.....

Water Tight Cranks:—One-way water tight crank boxes No.... Order as needed. To be used only when necessary to place leadout underground. Weight.....230 lbs.

Water Tight Cranks:—One-way water tight crank boxes No.... Order as noted above. Weight.....220 lbs.

NOTE: Crank No...., to be used except where more than one function is to be operated from one lever, when No.... will be used.

Water Tight Crank Boxes, Two-Way:—Weight.....300 lbs.

Tee Cranks:—One-way tee cranks No.... Order one tee crank per bar except where more than one bar is used on one switch.
Weight.....35 lbs.

NOTE: Bars to be used only in exceptional cases where electric locking cannot be applied.

Front Rods:—Front rod No.... Order one per interlocked switch and one per outlying switch lock. Weight.....25 lbs.

Plungers:—Plunger casting and 21 in. plungers No.... Order one per switch or derail.
Weight, casting.....33 lbs.
" plunger .....4.75 lbs.

Lock Rods for Switches:—Lock rods No...., to be 5 ft. 4 in. long not measuring screw jaw. Order one per switch.
Weight.....25 lbs

Lock Rods for Derails:—Lock rod No.... Order one per split-point or Hayes derail except Hayes derail working in conjunction with outlying switch lock. Weight.....18 lbs.

LUGS, JAWS, BOLT LOCKS AND CHAIN WHEELS.

R. H. Switch Lug:—R. H. switch lug No..... Order one per switch and one per outlying switch lock. Weight.....7 lbs.

L. H. Switch Lug:—L. H. switch lug No.... Order one per switch and one per outlying switch lock. Weight.....7 lbs.

R. H. Derail Lug:—R. H. derail lug No.... Order one per split-point derail which derails to the right. Weight.....7 lbs.

L. H. Derail Lug:—L. H. derail lug No.... Order one per split-point derail which derails to the left. Weight.....7 lbs.

Lug Bolts:—⅝ in. x 3⅜ in. flat head lug bolts complete No.... Order two per switch or derail lug. Weight.....½ lb.

Pipe Lugs:—Pipe lug No.... Order one per pipe-connected function not on separate lever. Weight.....9 lbs.

Bolt Locks:—Bolt locks No.... Order one, two or three-way pipe or wire-connected as needed.

NOTE: Mechanical signals to be bolt locked only when facing point switches or derails come between signal and machine.

One-way wire bolt lock, weight.....41 lbs.
Two-way wire bolt lock, weight.....62 lbs.
Three-way wire bolt lock, weight.....82 lbs.
One-way pipe bolt lock, weight.....36 lbs.
Two-way pipe bolt lock, weight.....55 lbs.
Three-way pipe bolt lock, weight.....74 lbs.

Pipe Adjusting Screws:—Pipe adjusting screw No..... Order one per pipe-connected blade, one per facing point lock, one per way of pipe-connected bolt lock and one per Hayes derail.
Weight.....15 lbs.

1¼ in. Solid Jaws:—1¼ in. solid jaws No.... Order one per pipe-connected lever in machine, one per rocker shaft arm, two per one-way crank, four per two-way crank, two per compensator, one per pipe-connected blade, one per plunger, two per way of pipe-connected bolt lock, two per deflection bar, one per pipe lug, three per tee crank, two per Hayes derail, two per one-way radial arm, four per two-way radial arm, two per one-way water tight crank boxes, four per two-way water-tight crank boxes.
Weight.....9½ lbs

1¼ in. Screw Jaws:—1¼ in. screw jaws No.... Order one per bolt lock, one per pipe to wire lug and one per tee crank.
Weight.....10 lbs.

Adjustable Link:—18 in. adjustable link No.... Order one per outlying switch lock. Weight.....8½ lbs.

Pipe to Wire Lug:—Pipe to wire lug No...., and shackle, and without lag screws. Order one per dwarf signal if machine is horizontal, one per dwarf signal if machine is vertical and if pipe line is across tracks in oil. Weight.....76 lbs.

Chain Wheels, Two-Way Horizontal:—Two-way horizontal chain wheels No.... Order as needed. Weight.....20 lbs.

Chain Wheels, Four-Way Horizontal:—Four-way horizontal chain wheels No.... Order as needed. Weight.....36½ lbs.

NOTE: Do not order horizontal chain wheels more than two high.

Vertical Back Wheels, One-Way:—One-way vertical back wheels No.... Order one per dwarf signal if machine is vertical and if no pipe-to-wire lug is used. Weight.....4½ lbs.

Vertical Front Wheels, One-Way:—One-way vertical front wheels No.... Order as above. Weight.....14½ lbs.

Wire Adjusting Screws:—Wire adjusting screws No.... Order two per wire-connected dwarf and two per way of wire-connected bolt lock. Weight.....3 lbs.

Transverse Pipe Carriers, One-Way:—Transverse pipe carriers No.... Order as needed and three per outlying switch lock. Weight.....9 lbs.

Transverse Pipe Carriers, Two-Way:—Two-way transverse pipe carriers No.... Order as needed. Weight.....15½ lbs.

Transverse Pipe Carriers, Three-Way:—Three-way transverse pipe carriers No.... Order as needed. Weight.....17 lbs.

NOTE: Pipe supports must not be more than seven feet apart. Cross pipe is supported by transverse pipe carriers twice on each tie.

Pipe Carriers:—Pipe carriers No.... Order one per pipe-connected lever in vertical machine and one per rocker shaft. Weight.....5½ lbs.

Pipe Carriers:—Pipe carriers No.... Order 30 per outlying switch lock. Weight.....

Wire Eyes:—Wire eyes No.... Order two per dwarf, two per wheel, two per wire adjusting screw, two per way of wire bolt lock, two per wire lever, and two per cable. Weight.....1/30 lb.

Split Links:—Split link No..... Order as above except for cables. Weight.....1.8 lbs.

Wide Jaws:—Wide jaw No.... Order as needed for use only in water-tight crank box No.... Weight.....9 lbs.

Plungers for Oil Pipe:—Plungers 1.375 diameter, tanged at both ends for 1 in. pipe and with 2 ft. clear between couplings. Order one per stuffing box. Weight.....12½ lbs.

DETECTOR BARS.

Rail Clips:—Combination rail clips No...., with motion plates No...., complete with rivets. Order 16 per bar. Always give full information relative to section and weight of steel, and that bar is ⅜ in. Weight.....11½ lbs.

Detector Bars:—Detector bars No...., bars to be 55 ft. long and with two three-bolt splices. Order as needed. Weight.....154 lbs.

NOTE: Bars must be arranged to give 55 ft. protection.

Inside Bars:—Inside detector bars No...., to be used only on authority from signal engineer's office.

Driving Pieces:—Wrought driving pieces No.... Order one per bar. Weight.....4 lbs.

NOTE: Slots not used. Where interlocking comes within automatic territory, all high signals will be power operated.

Battery Chutes:—Single cast iron battery chutes No...., with trunking cap. Order one per track section except where track battery can be located in tub with signal battery, or in tub with indicator battery, or where climate allows location of gravity battery in battery boxes. Weight.....272 lbs.

Relay Box, Chute and Post:—Double relay box No...., and post No...., and chute No.... Order as needed for location where no track battery shelter is available except in chute.

Weight, post ..... 65 lbs.
" box .....171 lbs.

Relay Box and Post for Concrete Foundation:—Double relay box No.... and post No.... Order as needed where relays cannot be housed in single cases and where box post No..... cannot be used, or where next item cannot be used.

Weight, post..... 45 lbs.
" box .....171 lbs.

Relay Box for Signal Pole:—Double relay box with "U" bolt for six-in. pole. Order where relays are located at mechanical home signals.

RELAYS.

Relays:—Order relays as needed, four-ohm for track and 200-ohm for line.

NOTE: Under no circumstances may line be broken through platinum or silver, or track through graphite contacts. It is good policy to order some of the relays with extra points for use in possible future alterations.

Relays, Four-Ohm:—Two graphite front, two silver back, weight.....10 lbs.

Relays, Four-Ohm:—Two silver front, two silver back, weight.....10 lbs.

Relays, Four-Ohm:—Three graphite front, two silver back, weight.....10 lbs.

Relays, Four-Ohm:—Three silver front, two silver back, weight.....10 lbs.

Relays, Four-Ohm:—Four graphite front, two silver back, weight.....10 lbs.

Relays, Four-Ohm:—Four silver front, two silver back, weight.....10 lbs.

Relays, Four-Ohm, Mixed Points:—Two silver and one graphite front and two silver back, weight.....10 lbs.

Relays, Four-Ohm, Mixed Points:—Two silver and two graphite front and two silver back, weight.....10 lbs.

Relays, 200 Ohms:—Two graphite front, two silver back, weight.....10 lbs.

Relays, 200 Ohms:—Three graphite front, two silver back, weight.....10 lbs.

Relays, 200 Ohms:—Four graphite front, two silver back, weight.....10 lbs.

Indicator Relays:—Bank of .... indicator relays No.... in case with hasps for seals. All relays to have four graphite front contacts. .... relays to be wound to 500 ohms resistance, and to have yellow blade standing clear when de-energized. Remainder of relays to be wound to 200 ohms resistance and to have red blades standing clear when energized. Relays that pick up the stick relays to be equipped with two silver back contacts.

Order as needed when plant has approach and detector locking. There will be needed one relay per track section, one per distant signal, one per parallel route and one or two spare. Weight.....11 lbs.

NOTE: The 500-ohm relays are back lock relays for distant signals.

Switch Boxes:—Vertical rotary switch circuit controllers No.... Order one for each switch between home and distant on main line, one for each crossover switch leading to a track which should be normally left set against moves to main line and which may be used for storage. Has four front or four back contacts or two front or two back contacts. Weight.....42 lbs.

CIRCUIT CONTROLLERS.

Circuit Controllers (for signals):—Horizontal rotary circuit controller No....., with six-in. arm, weight.....14 lbs.; clamp for four-in pipe, drawing weight.....10 lbs.; and rod No.... without clamp, weight.....4 lbs. Order one per pipe-connected home.

Circuit Controllers (for interlocking machine):—Horizontal rotary circuit controller with four-in. arm. Fig. .... Order one per dwarf signal, one per pipe-connected home signal, one per lever operated power signal, and one per interlocked crossover. Weight.....14 lbs.

Rod (for circuit breaker):—Rod No..... Order one per circuit breaker on machine, if machine is horizontal. Weight..2 lbs.

Cast Arm (for circuit breaker):—Cast arm No....., with ⅜ in. x 2¾ in. tap bolt No.... Order one per circuit breaker on machine, if machine is horizontal. Weight.....1¾ lbs.

Adjustable Clamps (for circuit breaker):—Adjustable clamp No.... Order one per circuit breaker on machine, if machine is vertical. Weight.....1½ lbs.

Connecting Rods (for circuit breaker):—Straight rod without clamp No.... Order one per circuit breaker on machine, if machine is vertical. Weight.....4 lbs.

Electric Screw Releases:—Electric hand screw releases, Fig..... Order one per parallel route. Weight.....32 lbs.

Two-Way Terminals:—Two-way terminals No.... Order two per relay, two per front contact, one per back contact, one per ground wire, 10 per indicator relay, and 15 per power signal.

One-Inch Solid Jaw:—One-in. solid jaw tanged for one-in. pipe No...., with ⅝ in. x 2 in. pin and cotter. Weight..6 1-3 lbs.

One-Inch Screw Jaws:—One-in. screw jaw tanged for one-in. pipe. Plan...., with ⅝ in. x two-in. pin and cotter. Order one per switch box. Weight.....8 lbs.

Wire Carriers, Two-Way:—Two-way wire carriers No.... Order one per 21 ft. of two-way wire line where wire line ex-

tends beyond pipe line and about six extra for leadout where needed. Weight.....1 lb.

Wire Carriers, Four-Way:—Four-way wire carriers No.... Order as above. Weight.....1½ lbs.

Outlying Switch Locks:—Outlying switch lock No...., wound to 200 ohms resistance with lock rod No...., and with telephone and condenser, but without wall telephone, front rod, lugs, hand switch or battery. Order as needed. Outlying switch locks to be used in place of advance block signals when interlocking comes within automatic territory. Weight.....347 lbs.

Bushings:—One-in. hard rubber bushings No.... Order as needed for protecting wires entering mechanical signal.

PIPE CARRIER MATERIAL.

Pipe Carrier Material:—Base plates and clamps:

Two-way base plates and clamps, No.... Weight....4 and 2 lbs.
Three-way base plates and clamps, No.... Weight.5 and 2½ lbs.
Four-way base plates and clamps, No.... Weight.6½ and 3 lbs.
Five-way base plates and clamps, No.... Weight....8 and 3 lbs.
Six-way base plates and clamps, No.... Weight.8½ and 4 lbs.
Seven-way base plates and clamps, No.... Weight..10 and 4 lbs.
Eight-way base plates and clamps, No.... Weight.12½ and 5 lbs.

Order as needed. Pipes to be supported every seven ft. Order base plates and clamps one size larger than pipe run. If more than eight wires must be carried order base plates and clamps two sizes larger than pipe run. If more than eight-way base plates are needed divide the line up equally as possible. For instance, if 13 ways are needed order a six-way and seven-way base plate.

Pipe Carriers:

One-way pipe carriers complete, weight..... 4.8 lbs.
Two-way pipe carriers complete, weight..... 8.2 lbs.
Three-way pipe carriers complete, weight..... 11.6 lbs.
Four-way pipe carriers complete, weight..... 15.0 lbs.
Five-way pipe carriers complete, weight..... 18.3 lbs.
Six-way pipe carriers complete, weight..... 21.7 lbs.
Seven-way pipe carriers complete, weight..... 25.0 lbs.
Eight-way pipe carriers complete, weight..... 28.5 lbs.

Order as needed. Pipe to be supported every seven feet. Specify that stands are to be malleable iron.

Wire Carrier Stands:—Wire carrier stands No.... Order as needed. Wire to be supported every 21 feet. Weight....1 lb. 4 oz.

Wire Carriers, Two-Way:—Two-way wire carriers No...., complete with bolt. Order as needed. Weight.....12 oz.

Wire Carriers, Four-Way:—Four-way wire carriers No...., complete with bolt. Order as needed. Weight.....1 lb. 4 oz.

NOTE: One wire carrier stand will support two, four-way wire carriers.

Pipe carrier stands.....23 oz
Bottom rollers .....19 oz.
Top rollers ..... 9.5 oz.
Shafts ..... 2.5 oz.
Lugs ..... 1 oz.

NOTE: Bolts for wire carriers on the short lug are ¼ in. x 1 in.

INSULATED JOINTS.

Insulated Joints:

Weber insulated joints, 100 lbs.....85 lbs.
" " " 90 " .....78 lbs.
" " " 85 " .....79 lbs.
" " " 80 " .....70 lbs.
" " " 75 " .....69 lbs.
" " " 66 " .....59 lbs.
" " " 61 "

Order as needed, giving all specifications as to weight, section, and punching of steel.

Sole Plates, Fibre:—Fibre sole plates for 85-lb. steel. Order one per non-interlocked switch within track circuit if arrangements cannot be made to have switch made standard with .....Co. insulated material.

Bolt Bushings, Fibre:—¾-in. fibre bolt bushings. Order eight per switch, as per note above.

NOTE: Ordinary insulated switch requires four joints. Cross-over requires six joints.

BATTERY WELLS.

Concrete battery well (80 cells). Weight..... 4,000 lbs.
Concrete battery well (60 cells). Weight..... 3,450 lbs.
Concrete battery well (40 cells). Weight..... 3,100 lbs.
Concrete battery well (30 cells), (no gravity). Weight. 1,600 lbs.
Concrete battery well (20 cells), (no gravity). Weight. 1,000 lbs.
Concrete battery well (24 cells). Weight..... 2,000 lbs.

Order as needed. Twenty-cell type will not be used in interlocking work. Twenty-four-cell type will be used in preference to others up to its capacity.

NOTE: Where possible locate distant and advance block battery in same tub. Indicator batteries at home signals and cut sections to be put in 24-cell tubs. By cutting shelving down and adding a third shelf a 40-cell battery well can be made to hold 16 additional cells. This is not to be done except where unavoidable.

BATTERY.

Gravity Battery:—Gravity battery with six-in. x eight-in. standard jars, four lb. round zincs and pan bottom coppers. Order three per track section. Weight.....8 lbs.

Vitriol:—Railway specification blue vitriol. Order four lbs. per cell of gravity.

Caustic Soda Battery:—Battery. Order 16 cells per power signal at single location, 16 per two power signals working off the same battery if it is impossible to clear both signals at once, 20 per two power signals on the same battery if both can be cleared at one time, six for controlled line relays on one common if there are no more than three relays that can be energized at one time, otherwise order eight cells. Order eight cells additional to controlled relay, battery for each outlying switch lock. Back lock indicator relays work off of distant signal battery and require no extra. All other indicators relays require six cells each unless more than one on one route can be operated from one battery of six. Order in multiples of eight. Weight.....16 lbs.

Dry Battery:—Order two cells per wall phone for outlying switch. Weight.....2 lbs.

Arresters:—Type ... lightning arresters. Order one per active wire in cables and five per cent extra for breakage. Weight.½ lb.

Tags:—Black fibre tags with ½-in. hole. Order 50 per power signal and 50 per track section. This is a good average.

Connectors, Battery:—For No. 9 B. &. S. wire. Order one per cell of gravity battery.

CONCRETE.

Crushed Rock:—One-in. crushed rock. Order three yards per signal foundation ordinarily, one yard per stub post, one yard per crank, compensator, wheel or relay box foundation, 10 yards for oil pipe leadouts, one-half yard per horiz ntal machine leg, one-half yard per dwarf signal, and one yard per pipe-to-wire lug. Order for retaining walls as needed. Conditions on the ground may increase these quantities largely. Eighteen yards rock per heavy two or four track bridge. Five yards rock per C. & N. W. type bridge. Seven yards rock per cantilever mast. Weight .....

Cement:—Sacks cement. Order four sacks per yard of crushed rock. Four sacks extra per stub pole and for battery box. Weight.....100 lbs.

Sand:—Coarse, clean, sharp river sand. Order 60 per cent of amount of rock. Weight.....

Foundations:—Pipe carrier foundations, 36-in. Order as many as there are base plates and five per cent extra for breakage.

CONCRETE FOR RETAINING WALLS.

Cement required for retaining walls at signal locations is shown in following table. Walls to have four-in. tops, a one-to-six batter on outside and to be perpendicular on the inside. Heights given are for above ground. Table allows for approximately 1-5 the height underground.

Using 1 : 2 : 4 mixture:

Height.	Signal only.	Signal and well.	Signal, well and stub pole.
3	11	16	18
4	15	22	26
5	20	30	35
6	26	39	45
7	33	49	57
8	48	72	84
9	57	86	100
10	67	100	117
12	89	132	154
14	126	189	221
16	155	233	272
18	204	305	356
20	240	360	420

Order one cubic yard of rock per five sacks cement. Order one cubic yard of sand per seven sacks cement.

LUMBER MATERIAL.

Ties:—Sawed and treated pine 8 in. x 10 in. x 14 ft. 93 ft. B. M. Order one per switch box. Weight.....279 lbs.

Sawed and treated pine 8 x 10-12. 80 ft. B. M. Order one per interlocked switch or derail, and one per bolt lock. Weight.240 lbs.

Sawed and treated pine 10 x 10-12. 100 ft. B. M. Order one per interlocked switch or derail. Weight.....300 lbs.

Sawed and treated pine 7 x 12-16. 112 ft. B. M. Order two per outlying switch lock. Weight.....336 lbs.

Sawed and treated pine 7 x 9-12. 63 ft. B. M. Order one per outlying switch lock. Weight.....189 lbs.

Sawed and treated pine 7 x 9-10. 53 ft. B. M. Order five per outlying switch lock. Weight.....159 lbs.

Treated Pine:—Treated pine 4 in. x 12 in. Order one piece three ft. longer than horizontal machine.
Weight.....12 lbs. per lineal ft.

Treated pine 4 in. x 12 in. x 12 ft. Order one piece per outlying switch lock. Weight.....144 lbs.

Common Pine:—Common pine S 2 S, 1 in. x 10 in. x 16 ft. Order six pieces per battery box. Weight.....40 lbs.

Common pine S 2 S, 1¼ in. x 6 in. x 12 ft. Order three pieces per battery box. Weight.....22 lbs.

Common pine 2 in. x 4 in. x 16 ft. Order four pieces per job. Weight.....32 lbs.

Corrugated foot holds. Order four planks, plan .... two feet longer than machine.

Stakes:—Three in. x 4 in. x 4 ft. pointed oak stakes. Order one per 21 ft. of wire line extending past pipe line and six extra for leadout where needed. Weight.....16 lbs.

Ceiling:—Four-in. beaded ceiling. Order 325 lineal feet for battery cupboard in tower or depot. Weight....155 lbs. (total).

Indicator Sub-Base:—Oak quarter-sawed. ($77.00 per 1,000 B. M.) ¾ in. x 8 in. quarted-sawed oak, S 4 S. Order one 12-ft. piece for each bank of 10 indicator relays. Weight....24 lbs.

White Pine:—One in. x 8 in. clear, soft white pine A. A., S 4 S. Order one eight-ft. piece per bank of 10 indicator relays. Weight.....11 lbs.

One in. x 10 in. clear, soft white pine A. A. About $80.00. Order one.

Eight-foot piece per bank of 10 indicator relays for shelf. Weight.....13 lbs.

One in. x 8 in. 8 ft. soft pine. Order one piece per tub. Weight.....11 lbs.

Form Lumber:—Two in. x 8 in. x 12 in. redwood S 1 S. 16 ft. B. M. Order 16 pieces per job for forms for concrete foundations. Weight.....32 lbs.

Retaining Wall Form Lumber:—Weight, per ft. B. M....2 lbs.

NOTE: Two-in. redwood S 1 S should be ordered as needed. At many jobs none will be needed, and often foremen will have sufficient material left from previous work.

Trunking:—

NOTE: Cypress will be used on Gulf lines and redwood or Port Orford cedar on remainder of system.

Order as per sketches:

Per lineal foot 2 in. x 6 ft. trunking. Weight.....1 2-3 lbs.

Per lineal foot 1 in. x 6 ft capping. Weight.....1 lb.

NOTE:

1 x 2 groove will hold 6 No. 14 wires.
2 x 2 groove will hold 14 No. 14 wires.
2 x 4 groove will hold 30 No. 14 wires.

LIGHTNING ARRESTER BOXES.

Four-Way Arrester Boxes:—Four-way lightning arrester boxes, plan S 23. Order one per cable pole only. Weight..14 lbs.

Eight, 12, 16 and 20-Way Boxes:—

Eight-way lightning arrester boxes, plan S 23. Weight..19 lbs.

Twelve-way lightning arrester boxes, plan S 23. Weigh..25 lbs.

Sixteen-way lightning arrester boxes, plan S 23. Weight.31 lbs.

Twenty-way lightning arrester boxes, plan S 23.

NOTE: Order as needed for protecting lightning arresters on stub poles. Nothing smaller than eight-way should be used.

WIRE AND CABLE.

Cable:—Four-conductor aerial cable, ...railway specifications. Weight, per 1,000 ft., including reel.....

Six-conductor aerial cable, ...railway specifications. Weight, per 1,000 ft., including reel.....375 lbs.

Eight-conductor aerial cable, ...railway specifications. Weight, per 1,000 ft., including reel.....450 lbs.

Ten-conductor aerial cable, ...railway specifications. Weight, per 1,000 ft., including reel.....500 lbs.

Twelve-conductor aerial cable, ...railway specifications. Weight, per 1,000 ft., including reel.....

Sixteen-conductor aerial cable, ...railway specifications. Weight, per 1,000 ft., including reel.....720 lbs.

Twenty-conductor aerial cable, ...railway specifications. Weight, per 1,000 ft., including reel.....980 lbs.

Order cable as needed.

NOTE: Allow 1-5 total number of conductors for spares. As far as possible, signals should be so located that short runs to pole line will be sufficient. Cable should be carried in such quantities at storehouse that it will be possible to send entire reel to the job so that exact lengths can be cut as needed. Remainder of reel can be memorandumed to next job or returned for credit.

No. 14 N. E. C. Wire:—N. E. C. No. 14 solid copper single braid 3/64 in. insulation. Order 500 ft. per ordinary 16 lever job for tower or depot wiring.

Lamp Cord:—No. 16 N. E. C. lamp cord. Order ¼ yard per two-way terminal pl. B2040. Weight, per 1,000 ft.....42 lbs.

Line Wire:—No. 8 B. W. G. galvanized iron line wire, as per telegraph department specifications to be attached to requisition. Order as needed. Weight, per mile.....368 lbs.

Semaphore Wire:—No. 9 galvanized steel semaphore wire. Order as many feet as there is cable, and as is needed for mechanical dwarfs. Weight, per 1,000 ft.....58 lbs.

Tie Wire:—No. 9 annealed and galvanized tie wires, 13 inches long. Order 40 per mile of line wire. Weight, per 100....6.5 lbs.

No. 14 Copper:—No. 14 rubber covered solid copper wire, ... railway specifications for signal wire. Order as per sketch. If tracks must be crossed add 14 ft. to each wire. Weight, per 1,000 ft.....75 lbs.

No. 9 Solid Copper:—No. 9 rubber covered solid copper wire, ...railway specifications for signal wire. Order as per sketch. If tracks must be crossed add 14 ft. to each wire. Weight, per 1,000 ft.....108 lbs.

NOTE: No. 9 solid rubber covered wire to be used for all track jumpers and all track connections, except for track to battery, located in battery chute.

No. 9 Stranded Copper:—No. 9 rubber covered stranded copper wire, ...railway specifications for signal wire. Order as per sketch. If tracks must be crossed add 14 ft. to each wire. Weight, per 1,000 ft.....100 lbs.

NOTE: No. 9 stranded wire to be used only for connecting gravity battery in chutes to track. No. 9 to extend from bootleg wire to battery. Add $1.00 per 1,000 ft. of wire to cover cost of reels.

PAINT AND OIL.

Black Paint:—Ti Ki Graphite. Order 1 gal. per high signal. Order 1 gal. per 400 ft. of pipe. Weight, per gal.....10 lbs.

White Paint:—White lead in oil. Order 10 lbs. per ordinary 16 lever job.

Red Paint:—English vermilion. Order one 1-lb. can per job if necessary.

Yellow Paint:—Chrome yellow. Order one 1-lb. can per job if necessary.

Blue Paint:—Prussian blue. Order one 1-lb. can per job if necessary.

Lamp Black:—Lamp black. Order ½ lb. per 10 lever S. & F. machine.

Oil:—Boiled oil. Order six gals. of boiled oil per 100 lbs. of lead and one gal. oil per gal. of black paint. Weight, per gal.....7½ lbs.

NOTE: One gal. of white paint consists of 17 lbs. of white lead.

Coal Oil:—Coal oil. Order 10 gals. per job for lamps in bunk cars and 10 gals. to clean machine. Weight.....7 lbs.

Oil for Oil Pipe:—Winter strained black oil. Order 1⅛ gals. per 10 ft. of two-in. pipe. Weight.....7 lbs.

Turpentine:—Order one gal. per 100 lbs. white lead and one gal. per 20 gals. Ti Ki paint and some for bedbugs. Weight.7 lbs.

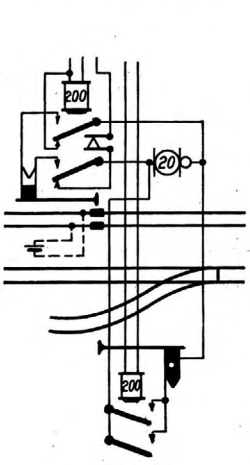

Fig. 19.

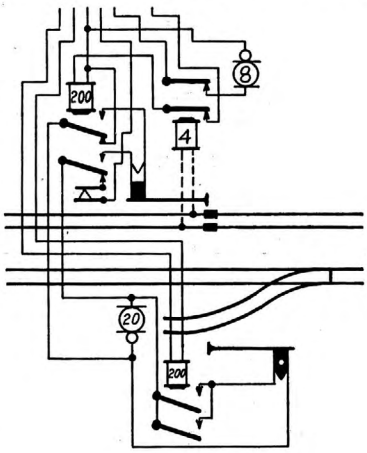

Fig. 20.

Note:—These layouts require:

	Copper Wire	2 in. x 6 in. (Rough)	2 in. x 2 in. (S 2 S)	1 in. x 6 in. (Rough)
Fig. 19	150 ft. No. 9, Solid, and 350 ft. No. 14, Solid.....	100 ft.	200 ft.	100 ft.
Fig. 20	140 ft. No. 9, Solid, and 400 f t. No. 14, Solid.....	100 ft.	200 ft.	100 ft.

	3 in. x 8 in. x 14 ft. (Rough)	1 in. x 2 in. Strips
Fig. 19.....	2	6 ft.
Fig. 20.....	2	6 ft.

NOTE: Add following for cans—One-gal. can; two-gal. can; five-gal. can.

Putty:—Order one five-lb. bladder per 10 signals.

Pale Semaphore Oil:—Pale Semaphore oil. Order half pint per job for oiling delicate parts.

Lard Oil:—Lard oil. Order half gal. per ordinary 16 lever job for drill press.

Gasoline:—Gasoline. Order as requested by construction foreman for "Jack-of-all-trades'" outfits.

Gas Engine Oil:—Gas engine oil. Order as requested by construction foreman for "Jack-of-all-trades" outfits.

BOLTS.

1 in. x 48 in.:—1 in. x 48 in. signal anchor bolts with washers, pipe sleeves, and hexagon nuts as per plan S 87. Order four per power signal. Weight.....20 lbs.

¾ in. x 13 in:—¾ in. x 13 in. square head machine bolts with nuts. Order 10 miscellaneous. Weight, per 100.....202 lbs.

¾ in. x 12 in.:—¾ in. x 12 in. square head machine bolts with nuts. Order five per horizontal deflecting bar; order four per plunger stand; order four per facing point lock crank. Weight, per 100.....190 lbs.

¾ in. x 11 in.:—¾ in. x 11 in. square head machine bolts with nuts. Order 10 miscellaneous. Weight, per 100.....178 lbs.

¾ in. x 10 in.:—¾ in. x 10 in. square head machine bolts with nuts. Order four per crank, wheel, deflecting bar or rocker shaft bearing in tower or located in leadout at tower where leadout is on same side of track as tower. Six per dwarf signal. Weight, per 100.....166 lbs.

¾ in. x 9 in.:—¾ in. x 9 in. square head machine bolts with nuts. Order eight per outlying switch lock. Weght, per 100.....154 lbs.

¾ in. x 8 in.:—¾ in. x 8 in. square head machine bolts with nuts. Order four per relay stand and four per motor dwarf. Weight, per 100.....142 lbs.

¾ in. x 7 in.:—¾ in. x 7 in. square head machine bolts with nuts. Order two per vertical machine leg. Weight, per 100..129 lbs.

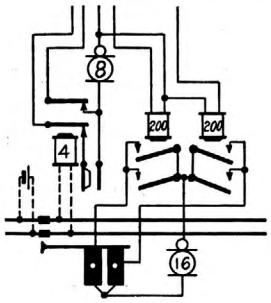

Fig. 21.

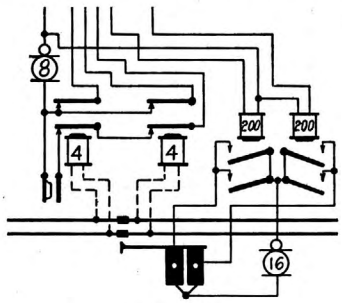

Fig. 22.

Note:—These layouts require:

Fig.	Copper Wire	2 in. x 6 in. Trunking	1 in. x 6 in. Capping	1 in. x 2 in. Strips
Fig. 21	100 ft. No. 9, Solid, and 500 ft. No. 14, Solid.....	150 ft.	165 ft.	3 ft.
Fig. 22	70 ft. No. 9, Solid, and 600 ft. No. 14, Solid.	150 ft.	165 ft.	3 ft.

¾ in. x 6 in.:—¾ in. x 6 in. square head machine bolts with nuts. Order four per horizontal machine leg and four per outlying switch lock; four per bolt lock. Weight, per 100....117 lbs.

¾ in. x 3 in.:—¾ in. x 3 in. square head machine bolts with nuts. Order eight per switch insulated by us. Weight, per 100.....81 lbs.

¾ in. x 2½ in.:—¾ in. x 2½ in. square head machine bolts with nuts. Order four per crank, compensator, wheel, pipe-to-wire lug, radial arm located in pipe run or in leadout, if leadout is on opposite side of tower, or if on either side if machine is in bay window. Order three per box adjustment, four per bolt lock and 10 per mechanical dwarf. Weight, per 100..... 75 lbs.

⅝ in. x 2½ in. cheese head:—⅜ in. thick head and nut lock; ⅝ in. x 2½ in. square cheese head bolts with nuts. Order two per switch box. Weight, per 100.....48 lbs.

¾ in. x 2½ in. cheese head:—⅜ in. thick head and nut lock; ¾ in. x 2½ in. square cheese head bolts with nuts. Order eight per interlocked switch.

½ in. x 10 in.:—½ in. x 10 in. square head machine bolts with nuts. Order one per lever in machine if the slide plates shown on drawing S-102 are used to get leadout through concrete wall. Four per dwarf signal. Weight, per 100.....70 lbs.

½ in. x 9½ in.:—½ in. x 9½ in. square head machine bolts with nuts. Order two per pipe carrier foundation. Three per stub pole. Weight, per 100.....68 lbs.

½ in. x 2 in.:—½ in. x 2 in. square head machine bolts with nuts. Order one per power signal located on same side of track as pole line, one per base plate larger than three-way and one per base plate when necessary to double. Weight, per 100..25 lbs.

½ in. x 1½ in.:—½ in. x 1½ in. square head machine bolts with nuts. Order one per base plate when larger than three-way. Weight, per 100.....23 lbs.

⅜ in. x 2 in.:—⅜ in. x 2 in. square head machine bolts with nuts. Order six per high signal blade and eight per battery box. Weight, per 100.....12 lbs.

⅜ in. x 4 in. carriage:—⅜ in. x 4 in. carriage bolts with nuts. Order one per stake, carrying two wire carriers. Occasionally used in leadout. Weight, per 100.....18 lbs.

⅜ in. x 1½ in. carriage:—⅜ in. x 1½ in. carriage bolts with nuts. Order 12 per battery box.

WASHERS.

¾ in.:—¾ in. cut washers. Order one per ¾ in. bolt. Weight, per 100.....10 lbs.

½ in.:—½ in. cut washers. Order two per ½ in. bolt. Weight, per 100.....2.6 lbs.

⅜ in.:—⅜ in. cut washers. Order one per ⅜ in. bolt. Weight, per 100..... 1.47 lbs.

NUT LOCKS.

¾ in.:—¾ in. Verona nut locks. Order three per box adjustment, four per bolt lock. Weight, per 100.....5.9 lbs.

⅝ in.:—⅝ in. Verona nut lock. Order one per switch lug bolt. Weight, per 100.....4 lbs.

LAG SCREWS.

¾ in. x 4 in.:—¾ in. x 4 in. lag screws. Order two per machine leg, and two per switch box. Weight, per 100.....57 lbs.

⅝ in. x 3 in.:—⅝ in. x 3 in. lag screws. Order two per transverse pipe carriers. Weight, per 100.....41 lbs.

½ in. x 3 in.:—½ in. x 3 in. lag screws. Order two per one-way....pipe carrier stand, two one-way pipe carrier. Weight, per 100.....7 lbs.

⅜ in. x 2 in.:—⅜ in. x 2 in. lag screws. Order three per circuit controller on machine.

RIVETS.

¼ in. x 1½ in. button head:—¼ in. x 1½ button head rivets. Order one per 10 ft. of 1 in. pipe and four per lever in machine where slide method of taking pipe through concrete wall is used. Weight.....37 per lb.

½ in. x 1¾ in. button head:—½ in x 1¾ in. button head rivets. Order four per detector bar driving piece. Weight.....7 per lb.

½ in. x ⅞ in. CSK:—½ in. x ⅞ in. CSK head rivets. Order three per rail clip. Weight.....11 per lb.

COTTER PINS.

3/16 in. x 1¾ in.:—3/16 in. x 1¾ in. cotter pins. Order 1 per pipe carrier stand and half gross miscellaneous. Weight.62 per lb.

WOOD SCREWS.

¾ in. No. 6 flat head brass:—¾ in. No. 6 flat head brass wood screws. Order one per union terminal.

¾ in. No. 8 flat head bright:—¾ in. No. 8 flat head brass wood screws. Order two per ¾ in. pipe strap.

½ in. No. 2 flat head brass:—½ in. No. 2 flat head brass wood screws. Order ¼ gross per bank of indicator relays.

1 in. No. 5 flat head brass:—1 in. No. 5 flat head brass wood screws. Order 1/6 gross per bank of indicator relays.

1 in. No. 6 round head blued:—1 in. No. 6 round head blued wood screws. Order two per lightning arrester.

1 in. No. 6 flat head bright:—1 in. No. 6 flat head bright wood screws: Order two per 2 in. pipe strap and four per floor flange.

1 in. No. 12 flat head bright:—1 in. No. 12 flat head bright wood screws. Order four per shelf-bracket.

1½ in. No. 14 flat head bright:—1½ in. No. 14 flat head bright wood screws. Order two per .... wire carrier.

NAILS.

40 d:—40 d common wire nails. Order five lbs. miscellaneous. Weight.....17 per lb.

20 d:—20 d common wire nails. Order 20 lbs. per 100 ft. of built trunking and about 20 lbs. for miscellaneous uses. Weight.....31 per lb.

16 d:—16 d common wire nails, one lb. per 100 ft. grooved trunking. Weight.....46 per lb.

10 d:—10 d common wire nails. Order 2½ lbs. per 100 ft. of grooved trunking and 15 lbs. for miscellaneous use. Weight.....77 per lb.

8 d:—8 d common wire nails. Order two lbs. per 100 ft. of grooved trunking. Weight.....115 per lb.

6 d:—6 d common wire nails. Order 10 lbs. for battery cupboard, 10 lbs. miscellaneous. Weight.....210 per lb.

3 d:—3 d galvanized shingle nails. Order one lb. per job for tacking hose.

Carpet Tacks:—11/16 in. steel wire, large, flat head. Order six per bootleg tin, six for stub pole, half gross per arrester box in bay window, and half gross per battery box....100 to the oz. box.

1½ in. No. 6 flat head bright:—1½ in. No. 6 flat head bright wood screws. Order four per shelf-bracket and one gross per indicator relay sub-base.

1½ in. No. 6 round head blued with washers:—Order one gross per indicator sub-base.

2 in. No. 14 round head blued:—2 in. No. 14 round head blued wood screws. Order two per one wire cleat, and quarter gross per bay window for wire run.

2 in. No. 6 round head blued:—2 in. No. 6 round head blued with washers. Order half gross per bay window for wire runs.

3 in. No. 16 flat heat bright:—3 in. No. 16 flat head bright wood screws. Order two per four-way arrester box.

3½ in. No. 14 flat head bright:—3½ in. No. 14 flat head bright wood screws. Order quarter gross per bay window for wire runs.

4 in. No. 14 round head bright:—4 in. No. 14 round head bright wood screws. Order two per cable cleat.

LAMPS AND GLASSES.

Lamps:—.... Style .... round-bodied steel semaphore lamps with flat flame, long-time burners. Order one per signal blade

8⅜ in. red glass:—8⅜ in. red roundels. Order two per mechanical home signal blade. Weight.....1¼ lbs.

8⅜ in. green glass:—8⅜ in. green roundels. Order one per mechanical home signal blade. Weight.....1¼ lbs.

3½ in. purple glass:—3½ in. purple roundel. Order one per dwarf signal on back-up routes or for any dwarf not governing from main line in direction of traffic. Weight.....3/16 lb.

3½ in. red glass:—3½ in. red roundels. Order one per dwarf signal not mentioned above. Weight.....3/16 lb.

3½ in. green glass:—3½ in. green roundels. Order one per dwarf signal. Weight.....3/16 lb.

NOTE: 8⅜ in. red, yellow and green glasses are furnished by Signal Company with power signals and are sent to us for test. Supervisor's office should notify proper party to ship glasses as needed, but should not issue requisition to cover.

Cantilever Lamp:—.... round-bodied steel semaphore lamp with one 4⅛ in. blue lens and one 2 in. bull's eye, and with flat flame long-time burner and three-day fount. Order as needed.

NOTE: Specify all lamps and glasses to come from tested storehouse stock.

Gauge Plates:—Insulated gauge plates, as per signal department plan....on file with....Co. Gauge plate to be for....lb. ....steel. Order as needed for interlocked switch or split-point derail, specifying rail. Weight.....137½ lbs.

Rods No. 1:—Insulated rods No. 1, as per signal department plan, ... on file with ..... Co. Order one per interlocked switch. Weight.....57 lbs.

Rod No. 2:—Insulated rods No. 2, as per signal department plan, ..., on file with ..... Co. Order one per interlocked switch. Weight.....38½ lbs.

Head Rod Guide for Derail:—Pattern No. 2881 for 9020. Order one per split-point derail.

Derail Rod:—Insulated rod, as per signal department plan, ... on file....Co. Order one per split derail.

NOTE: When non-interlocked switches come within track circuits, if possible arrangements should be made with superintendent to fit up with standard insulated rods and plates, as per chief engineer's drawings. Cost figures for plates and rods on following page.

For 85-lb. A. S. C. E. or 90-lb. .... Rail:—16 ft. 6 in. point, No.

10 frog. One insulated rod, No. 1 ....; one insulated rod, No. 2, ...; and one insulated gauge plate, ...

20 ft. Point, No. 14 Frog:—One insulated rod, No. 1, ...; one insulated rod, No. 2, ...; one insulated rod, No. 3, ...; and one insulated gauge plate.

For 75-lb. A. S. C. E. Rail:—11 ft. point, No. 8 frog. One insulated switch rod, ...; and one insulated gauge plate.

16 ft. 6 in. Point, No. 10 Frog:—One insulated rod, No. 1, ...; one insulated rod, No. 2; ...., and one insulated gauge plate.

For Rails Smaller Than 75 lbs.:—10 ft. 0 in. point. One insulated switch rod, ...; and one insulated gauge plate.

15 ft. 0 in. Point:—One insulated rod, No. 1, ...; one insulated rod, No. 2, ..., and one insulated gauge plate.

Cleats:—One-wire porcelain cleats in pairs for No. 14 wire. Order 15 per battery well and 10 per battery box. Weight, per pair.....¼ lb.

One-wire porcelain for .... c. m. Order as needed for supporting cables under eaves of depot, spacing about five feet.

NOTE: Size of cable entering depot must be determined before ordering these cleats. Approximate sizes are given below:

Conductor.	Diameter.	Cleat.
6	¾ in.	200,000 C. M.
8	1 "	500,000 C. M.
10	1⅛ "	1,000,000 C. M.
16	1⅜ "	1,250,000 C. M.
20	1¾ "	2,000,000 C. M.

Eye Bolts:—½ in. x 12 in. galvanized welded eye bolts. Order one per cable if iron conduit is used, and one extra for depot. If fibre conduit is used order two per cable. Weight.....¾ lb.

Bond Plugs:—9/32 in. channel pins. Order two per bond wire and add 15 per cent. Weight.....80 per lb.

Strain Insulatorss—Giant Strain Insulators, No.... Order one per power signal located on same side of track as pole line. Weight.....¾ lb.

Hayes Derails:—Right or left-hand Model A. P. 5 Hayes derail for ....lb. ....steel. Order as needed for back up derails and one per outlying switch lock. Weight.....110 lbs.

Targets and Operating Rods:—Order one target with operating rod for each outlying switch lock, specifying that target is to be used with Model A. P., Hayes' derail.

Padlocks:—Signal department .... padlocks. Order one per battery chute, relay box, tub, battery box, arrester box, switch box, circuit breaker on mechanical signal or power dwarf. Weight.....½ lb.

Butt Hinges:—2 in. wrought brass broad butt hinges. Order two per each five indicator relays. Weight.....1-5 lb.

Window Catches:—Brass window catches, ... Order two per each five indicator relays.

Hasps:—Hinge hasp .... Order one per battery box.

Shelf Brackets:—Wrought steel 4 in. x 5 in. shelf brackets, ... Order two per five-ways of indicator relays.

MISCELLANEOUS.

Pipe:—1 in. plugged interlocking pipe (black). Order as needed. Weight, per ft.....1.71 lbs.

1 in. plugged interlocking pipe (galvanized). Order as needed for all cross pipe, except that in oil pipe. Also order as needed for switch boxes. Weight, per ft.....1.71 lbs.

¾ in. galvanized pipe. Order as neded for carrying semaphore wires across roads. Weight, per ft.....1.15 lbs.

NOTE: Two wires in each ¾ in. oil pipe.

3 in. wrought pipe for bushing rocker shafts. Order 1 ft. per rocker shaft.

2 in. galvanized wrought pipe. Order as needed for oil pipe leadouts and for crossing wagon roads and 1 ft. per pipe through concrete tower wall unless rocker shaft leadout. Weight, per ft.....3.61 lbs.

NOTE: With bay window at standard distance from rail (12 ft.), and with 17 ft. centers it will require about 40 ft. of two-in. pipe for each pipe in the leadout. Provision should also be made to take care of block signal at same time.

Pipe Plugs:—6 in. four-hole pipe plugs for interlocking pipe. Order one for each 10 ft. of oil pipe. Weight.....1¾ lbs.

Pipe Couplings:—Pipe couplings for interlocking pipe. Order two per oil pipe plunger and one per 10 ft. of oil pipe.

Iron:—½ in. x 2 in. strap iron. Order 20 ft. per interlocked switch and 4 ft. for each track wire line crosses and 24 ft. per track crossed by leadout. Weight, per ft.....3.4 lbs.

¼ in. x 2 in. strap iron. Order 5 ft. per battery box. Weight, per ft.....1.7 lbs.

¾ in. x 1½ in. strap iron. Order 1½ ft. per switch box. Weight, per ft.....3.83 lbs.

½ in. x 1 in. strap iron. Order 1 ft. per battery box, and two pieces the length of the tower, if slide method of taking leadout pipes through concrete foundation wall is used. Weight, per ft.....1.7 lbs.

¼ in. x 1½ in. strap iron. Order three ft. per power signal located on same side of tracks as pole line. Weight, per ft. 1.28 lbs.

⅝ in. round iron. Order three ft. per battery box. Weight, per ft.....1.33 lbs.

½ in. square re-enforcing iron. Order 75 ft. per stub pole.

⅜ in. x 2⅞ in. strap iron. Plan.... Rusty iron not accepted. Order ½ ft. per pipe connected lever in machine if slide method of taking pipes through concrete wall is used. Weight...3.67 lbs.

1 in. x 1 in. light angle iron. Order 2 in. per bank of 10 indr. relays. Weight, per ft.....5.31 lbs.

Special Iron:—.... feet of iron planned as per Fig..... Order same number of feet under same conditions as above.

1¼ in. round iron. Order 20 ft. per 16-lever job. Weight, per ft.....4.173 lbs.

Chain:—¼ in. proof chain. Order four ft. per wheel and per mechanical dwarf. Weight, per ft.....1⅓ lbs.

Pitch:—.... barrels of medium hard pitch. Order one barrel per 300 ft. of 2 x 6 grooved trunking, per 200 ft. of built-trunking with 2 in. x 2 in. wire space and per 150 ft. of built-trunking with 2 in. x 4 in. wire space.

Marlin:—Tarred marlin. Order two lbs. per 100 ft. of cable.

Solder:—Half and half solder. Order two lbs. per power signal and two lbs. per track section.

Friction Tape:—¾ in. black .... Order one lb. per power signal.

Rubber Tape:—¾ in. .... tape. Order one-quarter lb. per power signal.

Soldering Paste:—....'s soldering paste. Order two tubes per lb. of ....friction ....tape.

Coal:—Blacksmith's coal in sacks. Order ½ ton per 16-lever job.

Soapstone:—Powdered soapstone. Order two lbs. per 16-lever job.

Bond Wires, 40 in. Iron:—40 in. No. 8 B. W. G. E. B. B. galvanized bond wires. Order 150 per 1,000 ft. of track. For four-hole joints. Weight, per 100.....25 lbs.

54 in. for six-hole joints.

40 in. Copper:—40 in. No. 6 B. & S. bond wires, copper, medium hard. Order for road crossing and platforms as necessary. Country road requires four, paved street required 12. Weight, per 100.....28 lbs.

78 in. Iron:—78 in. No. 8 B. W. G. E. B. B. galvanized bond wires. Order for boot-leg wires where there is danger of theft of copper. Switch frogs two each. Weight, per 100.....47 lbs.

78 in. Copper:—78 in. No. 6 B. & S. bond wires, copper, medium hard drawn. Order for boot-leg wires where there is no danger of theft. Weight, per 100.....52 lbs.

Tins 4 in. x 6 in.:—4 in. x 6 in. heavy boot-leg tins. IX grade roofing tin. Order one per boot-leg built of grooved trunking, one per tub.

Tins 5 in. x 6 in.:—5 in. x 6 in. heavy boot-leg tins. Order one per boot-leg made of built-up trunking.

3 ft. x 8 ft. Tin:—36 in. x 96 in. No. 26 galvanized steel. Order one per battery box.

Tins for Back Spec.:—One 2⅜ in. round tin per mechanical dwarf signal blade.

One 3 in. round tin per mechanical signal blade.

One 3.5 in. round tin per power signal blade.

Stuffing Boxes:—Stuffing boxes, consisting of one body ...., one gland.... and one nut.... Order two per oil pipe in leadout and in road crossing.

Tees:—Galvanized two in. pipe tees. Order one per oil pipe. Weight.....4 lbs.

Plugs:—Standard two in. pipe plug. Order one per tee. Weight.....⅜ lb.

Candle Wick:—Candle wick packing. Order 1-10 lb. per stuffing box.

Packing:—.... throttle packing, 1¼ in. x 2 in. x 2¼ in. Order one set per four stuffing boxes.

NOTE: To use .... packing in stuffing boxes first put in one layer of candle wicking, next one ring of packing, next a layer of wicking, and last another ring of packing.

Wheel Legs:—Cast iron wheel legs..... Order two per chain wheel in wire run or in leadout, if leadout is on opposite side from tower, or is located at bay window. Weight.....15 lbs.

Crank Legs:—Cast iron crank legs.... Order two per pipe-to-wire-lug, horizontal crank, or radial arm, except where located in leadout platform at towers. Order one per horizontal machine leg and two per compensator. Weight.....23 lbs.

Wire Stuffing Box:—Order two per two semaphore wires crossing public roads.

"U" Bolts:—"U" bolts, plan S 117. Order two per power signal located on same side of track as pole line.

Staples:—¾ in. wire fence staples. Order four per ground wire. Weight.....209 per 100 lbs.

Waste:—Order one lb. per job; order 10 lbs. if gang has "jack-of-all-trades" engine.

Emery Paper:—Order ½ doz. sheets No. 1 per job. Order ½ doz. sheets No. 00 per job.

Rubber Garden Hose:—18 in. per stub pole.

1/32 in. Red Fibre:—Order one square ft. per eight arresters.

Block Wall Phone:—Order one per outlying switch lock, 1,000-ohm resistance units. Order one per advance block signal single location, next to siding.

Terminal Boxes:—Order two, three, four or five arm boxes as needed.

Asbestos:—⅛ in. asbestos. Order one square yard per arrester box in bay window in tower.

Floor Flanges:—¾ in. flanges. Order one per electric lock and one per electric screw release, and one per circuit breaker in machine.

Soap:—Cheap soap. Order one pound per job for drill press.

Fibre Conduit:—2 in. fibre conduit. If fibre is to be used in stub poles instead of galvaduct order five ft. per stub pole or 10 ft. per combination stub pole and battery box.

Condenser:—Two M. F. capacity condenser No....

BLOCK SIGNAL MILEAGE.

The table shows graphically the mileage of block signals on the railways of the United States. The following figures from which the tabulation was made were taken from the reports of the Block Singnal & Train Control Board. The compilation and diagram were made by the General Railway Signal Co. On account of the small mileage operated by the electric train staff its relative growth could not be clearly shown in the graphical form.

	Miles of Track.
AUTOMATIC BLOCK SYSTEM.	
Normal danger	4,217
Normal clear	14,317
Total Automatic Block System	18,534
MANUAL BLOCK SYSTEM.	
Electric train staff	237
Controlled manual	5,182
Telegraph, telephone and bells	53,340
Total Manual Block System	58,757
Total miles Block Signals, 1907	77,291
AUTOMATIC BLOCK SYSTEM.	
Normal danger	4,879
Normal clear	15,712
Total Automatic Block System	20,591
MANUAL BLOCK SYSTEM.	
Electric train staff	284
Controlled manual	5,182
Telegraph, telephone and bells	53,340
Total miles Total Manual Block System	57,803
Total miles Block Signals, 1908	78,394
AUTOMATIC BLOCK SYSTEM.	
Normal danger	5,460
Normal clear	18,351
Total Automatic Block System	23,811
MANUAL BLOCK SYSTEM.	
Electric train staff	273
Controlled manual	4,262
Telegraph, telephone and bells	57,123
Total Manual Block System	61,658
Total miles Block Signals, 1909	85,469

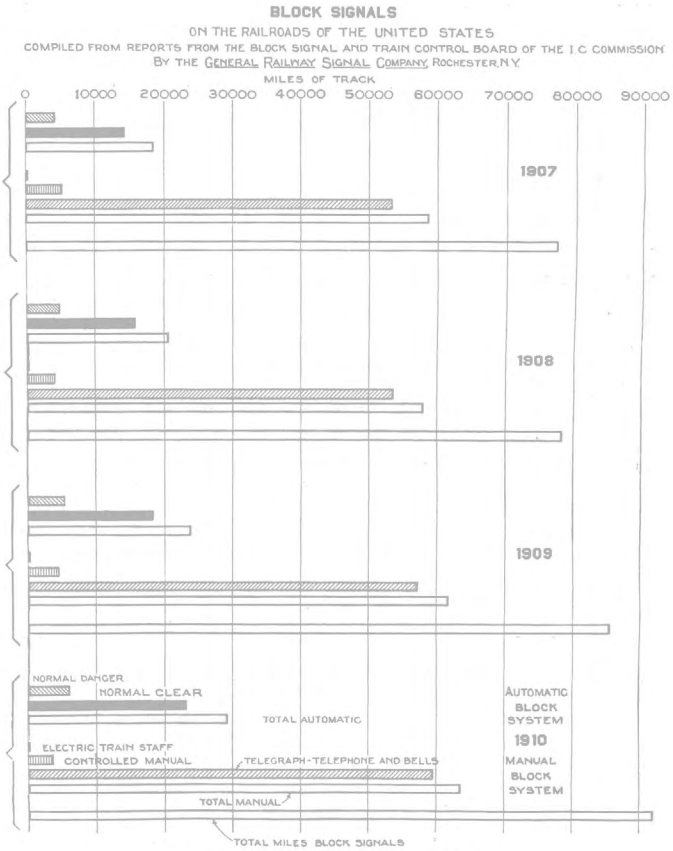

Block Signal Mileage Chart.

AUTOMATIC BLOCK SYSTEM.	
Normal danger	6,093
Normal clear	23,125
Total Automatic Block System	29,218
MANUAL BLOCK SYSTEM.	
Electric train staff	347
Controlled manual	3,677
Telegraph, telephone and bells	59,502
Total Manual Block System	63,526
Total miles Block Signals, 1910	92,744
Total miles passenger lines operated	195,922