Signaling at Lap Sidings

"At a set of lap sidings on a single-track line, where the switches are hand-thrown and the circumstances are such that trains enter the sidings at the lap switches, where would you locate the automatic signals and how would the track circuits and signal control circuits be arranged?"

Signals 100 Ft. from Switch Points

J. W. Chowning
Signal Foreman, Missouri Pacific, Dodson, Mo.

This circuit is designed for lap sidings located in A.P.B. signal territory, where all trains take sidings at the lap, and the signals are so located as to give the same indications as single siding signaling.

The signals are located 100 ft. from the switch points, with absolute signals governing movements at the lap as well as at the extreme ends of the sidings. The circuits are so designed for lap meets that a train entering the block from the west sets signals 7 and 5 in the stop position, with signals 3 and 1 at restricted speed, or yellow indication, for opposing move.

A train entering the block from the east sets signals 2 and 4 at stop position, with signals 6 and 8 at restricted speed, or yellow indication. This gives each train two yellow signals and one red signal as they arrive at the meeting point at the lap.

Assume a train from the west is the inferior train, and that it arrives at the lap first, before a train from the east had passed signal 3. The trainmen of the inferior train would open switch 4 before the train enters T4 track section, and 4RWPR would cut around 4 TPR in the control of 3 HD, eliminating a train stop at signal 3.

With the same type of meet, but with the trains traveling in opposite directions, 5RWPR would cut around 4TR in the control of 6HD, so as to eliminate a stop at signal 6 while the train is entering the lap. By using polar points of 3HD in the controls of signal 3, and 6HD in the controls of signal 6, as pole changers for the yellow indication for signals 1 and 8, only three line wires are used between sidings ends, eliminating extra line material, relays. Signals 4 and 5 require no directional sticks, because of the short overlap. Signals 7 and 2 require directional sticks for the yellow indication on signals 5 and 4. Signals 3 and 6 require directional sticks, the circuit being designed to give clear indications on signals 1 and 8 for follow-up moves after a train has passed signals 5 or 4, according to the direction in which the train is traveling. The lighting circuit shown is for head-block signals, continuously burning with power on and approach-controlled, with the power off, through the HD relay of the signal on the opposite side of the track. The train in the siding will get the signal while the train on the main track is passing and when the switch is open.

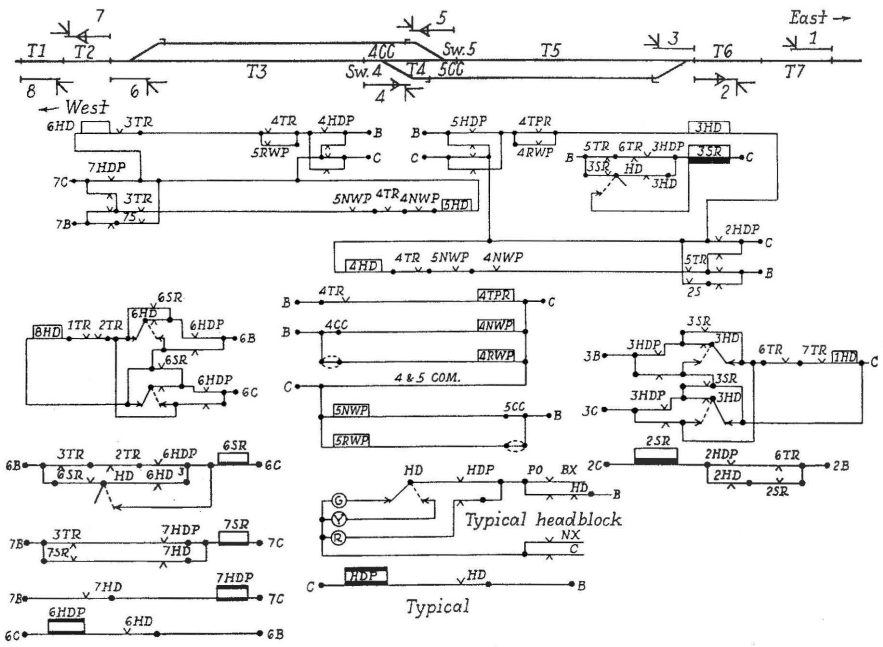

Proposed circuits for lap siding

Push-Button Cut-Outs

"What has been your experience as to the success in using manual cut-out, push-button switches operated by trainmen for the control of highway-crossing signals, to eliminate unnecessary false operation of the signals during switching movements?"

Highly Desirable

W. F. Zane
Signal Engineer, Chicago, Burlington & Quincy, Chicago

In principle, the use of a manually-operated push-button or hand-operated switch is highly desirable at locations where local switching causes false operation of highway protection signals, especially at points where it is impractical to give this control to some employee not permanently located nearby.

In providing such an arrangement, special care should be taken in preparing the circuits so that there is no chance of a cut-out becoming permanent and, in order to avoid this, there should be a short starting section when the train nears the crossing which will place the signal back on automatic operation. The push-button or cut-out switch should also be designed so that trainmen cannot plug it or take any means to keep it permanently in the cut-out position and, where such an arrangement is in vogue, special precaution should be taken to know that all of the trainmen are properly instructed in the handling of these cut-outs.

The preferable way to handle such conditions is, where possible, to put the control under the supervision of some set of permanently located employees who will only handle it when switching moves are being made and not handle it at all where any through moves are made.

The use of cut-out devices are, of course, not as satisfactory as one hundred per cent automatically-operated crossing signals, and should only be used in cases where the hazard of false ringing in switching moves require the employment of such methods.