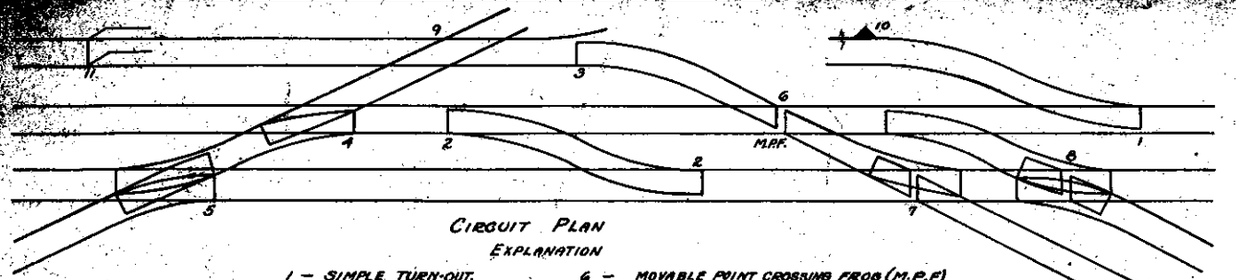

CIRCUIT PLAN

EXPLANATION

1 — SIMPLE TURN-OUT.
2 — SIMPLE CROSSOVER.
3 — DERAIL - SINGLE POINT.
4 — SINGLE SLIP SWITCH.
5 — DOUBLE SLIP SWITCH.
6 — MOVABLE POINT CROSSING FROG (M.P.F)
7 — SINGLE SLIP SWITCH WITH M.P.F.
8 — DOUBLE SLIP SWITCH WITH M.P.F.
9 — RIGID CROSSING FROG.
10 — LIFTING DERAIL.
11 — LIFTING RAIL DERAIL.

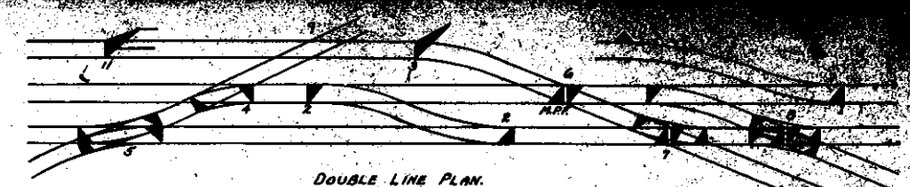

DOUBLE LINE PLAN.

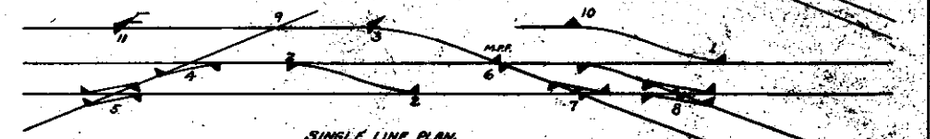

SINGLE LINE PLAN.

LAYOUT PLAN

SIGNAL CIRCUIT PLANS

SIGNAL LAYOUT PLANS.

SINGLE LINE. DOUBLE LINE.

SINGLE SWITCH

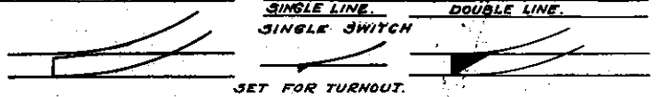

SET FOR TURNOUT.

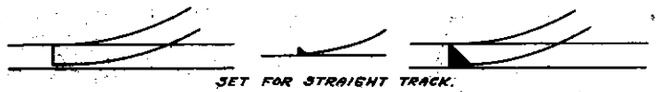

SET FOR STRAIGHT TRACK.

DERAILS

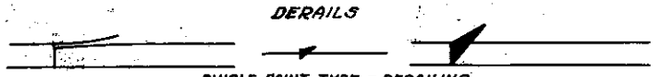

SINGLE POINT TYPE - DERAILING.

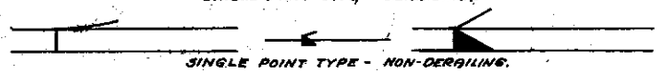

SINGLE POINT TYPE - NON-DERAILING.

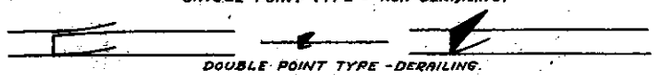

DOUBLE POINT TYPE - DERAILING.

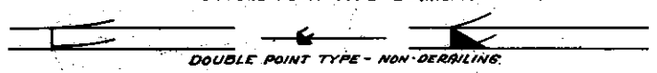

DOUBLE POINT TYPE - NON-DERAILING.

LIFTING RAIL TYPE - DERAILING

LIFTING RAIL TYPE - NON-DERAILING.

COMBINED LIFTING BLOCK AND POINT - DERAILING.

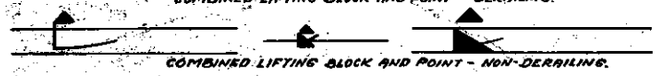

COMBINED LIFTING BLOCK AND POINT - NON-DERAILING.

LIFTING BLOCK - DERAILING

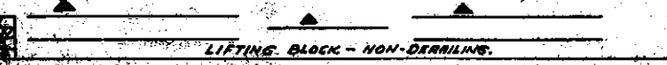

LIFTING BLOCK - NON-DERAILING.

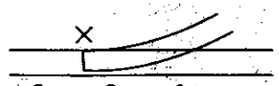

SWITCH CIRCUIT CONTROLLER

NOTE:-

NON-INTERLOCKED SWITCHES AND DERAILS ON LAYOUT PLANS SHALL BE ARRANGED AS SHOWN EXCEPT SHADING IN TRIANGLES OMITTED. NON-INTERLOCKED SWITCHES ON CIRCUIT PLANS SHALL BE SHOWN THUS :—

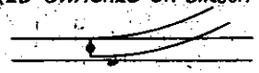

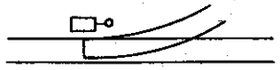

POWER SWITCH AND LOCK MOVEMENT.

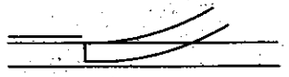

DETECTOR BAR.

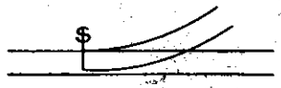

SPRING SWITCH

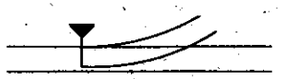

ELECTRIC SWITCH LOCK.

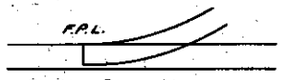

FACING POINT LOCK.

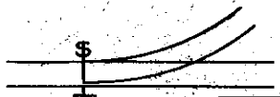

SPRING SWITCH WITH ELECTRIC SWITCH LAMP (RED AND GREEN TO BE DISPLAYED IN BOTH DIRECTIONS)

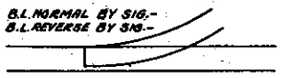

BOLT LOCKED SWITCH.

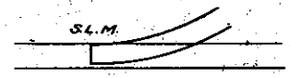

SWITCH AND LOCK MOVEMENT.

MECHANICALLY SLOTTED NORMAL BY SIGNAL

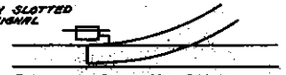

GROUND SLOTTED SWITCH

REVISIONS

[illegible] SWITCHES ON SIG[illegible] DERAILS CHANGED TO [illegible] WITH R.A.R. ON SEC. [illegible] & ISSUED APPROVED PLAN [illegible] APPROVED:

[illegible] 1922

SUPERSEDES PLAN S-[illegible] DATED 12-27-[illegible]

S-601

SHEET 2 OF 7

THE PENNSYLVANIA RAILROAD

STANDARD

SYMBOLS

OFFICE OF CHIEF SIGNAL ENGINEER

[illegible] JULY 28, 1922.

NOT TO SCALE

[illegible]

RAILWAY TRACKS

SIGNIFY STEAM OR ELECTRIC WHERE ELECTRIC TRACKS CROSS OR JOIN STEAM TRACKS.

- RAILWAY TRACK TO REMAIN
- RED — TRACK TO BE TAKEN UP
- YELLOW — PROPOSED TRACKS
- YELLOW — PROPOSED TRACKS (FUTURE)
- FOREIGN TRACKS (TO BE INDICATED BY NAME)

NOTE:~ EXPLANATION OF COLOR SHALL BE SHOWN ON PLAN.

(NAME OF INTERLOCKING)

- CL — CENTRAL INSTRUMENT LOCATION
- F — FREIGHT STATION
- P — PASSENGER STATION

BUILDINGS

- GS — GENERATING STATION
- SS — SUB-STATION
- CS — COAL STATION.

INTERLOCKING OR BLOCK STATION

TRACK

- OPERATOR FACING TRACK
- OPERATOR WITH BACK TO TRACK

HIGHWAY CROSSINGS.

- G — GRADE CROSSING.
- U.G. — UNDERGRADE CROSSING.
- O.G. — OVERGRADE CROSSING.

NOTE:- NAME TO BE PROVIDED AS NECESSARY. STREET NAME OR NUMBER, HIGHWAY NAME OR ROUTE NO., FARM OR PRIVATE CROSSING.

TUNNEL

BRIDGES

- TRESTLE
- GIRDER
- TRUSS
- LIFT SPAN
- BASCULE, DOUBLE LEAF
- BASCULE, SINGLE LEAF
- DRAW SPAN

NOTE:~ STATE WHETHER DECK, HALF THRU OR THRU BRIDGE

- DRAWBRIDGE RAIL LOCK.
- DRAWBRIDGE LOCK
- DRAWBRIDGE PIPE COUPLER
- DRAWBRIDGE CIRCUIT CONTROLLER.
- POLE LINE
- GROUND LEVERS
- DWARF MACHINE
- MILE POST (1.5)
- MAIL CRANE
- WATER TANK (W.T.)
- WATER, OIL OR GAS COLUMN (LETTER IN CIRCLE, KIND OF COLUMN)
- TRACK PAN
- TRACK INSTRUMENT (IF DIRECTIONAL INDICATE DIRECTION BY ARROW)
- DRAGGING EQUIPMENT DETECTORS.
- MERIDIAN (N)
- TRAFFIC DIRECTION
- TRAFFIC LOCKING (R ← T.L. 37 → N)

CAR RETARDERS

- ONE RAIL SINGLE
- ONE RAIL DOUBLE
- TWO RAIL SINGLE
- TWO RAIL DOUBLE

SKATE MACHINES

- POWER
- MANUAL

TRAIN STOPS

- STOP
- CLEAR
- NON-AUTOMATIC MECHANICAL
- NON-AUTOMATIC POWER
- SLOTTED
- SEMI-AUTOMATIC
- AUTOMATIC

SECTIONALIZING SWITCHES.

- MOTOR OPERATED-NORMALLY CLOSED
- MOTOR OPERATED-NORMALLY OPEN
- HAND OPERATED-NORMALLY CLOSED
- HAND OPERATED-NORMALLY OPEN.

REVISIONS

APRIL 12, 1947 SYMBOLS FOR RAILWAY TRACKS, MAIL CRANE TRACK INSTRUMENT AND POLE LINE CHANGED AND DRAGGING EQUIPMENT DETECTORS ADDED TO AGREE WITH A.R.R. SIG. SEC. DWGS. 1662 B, 1664 B & 1667 B APPROVED MAR. 1945. SYMBOLS FOR CENTRAL INSTRUMENT LOCATION AND SECTIONALIZING SWS. ADDED. APPROVED: W.Q.H.

SUPERSEDES PLAN S-601 DATED 12-27-24.

SHEET 3 OF 7

S-601-A

THE PENNSYLVANIA RAILROAD

STANDARD

SYMBOLS

OFFICE OF CHIEF SIGNAL ENGINEER
PHILA., PA., JULY 25, 1935.

NOT TO SCALE

Approved: Chief Signal Engineer

Approved: Chief Engineer

	AUTOMATIC POWER			SLOTTED (MECH.)	SEMI-AUTOMATIC (POWER) STICK		SEMI-AUTOMATIC (POWER) NON-STICK		AUTOMATIC (POWER)		SPECIAL (ROUTE REFERENCE LIGHTS)	
	SEMA-PHORE	SEMA-PHORE	POSITION LIGHT	SEMA-PHORE	SEMA-PHORE	POSITION LIGHT	SEMA-PHORE	POSITION LIGHT	SEMA-PHORE	POSITION LIGHT	SEMA-PHORE	POSITION LIGHT
U.R. 90°												
D.R. 45° L.R. 45°												
U.R. 45°-90°												
L.R. 45° U.R. 90°												
D.R. U.R. 45° L.R. 45°												
U.R. L.R.												
U.R. 45°-90° L.R. 45°												
U.R. L.R.												
U.R. 45°-90° L.R. 45°												
U.R. D.R. L.R.												
FIRE SIGNAL INDICATOR												

	SEMAPHORE	POSITION LIGHT

SIGNAL ON CATENARY POLE — GROUND MAST — GROUND MAST WITH BRACKET ATTACHMENT — CANTILEVER POST — BRACKET POST — SUSPENSION MAST

SIGNAL SUPPORTS

CROSSING SIGN — BELL — WIGWAG — ONE WAY FLASHING LIGHTS — BOTH WAYS

NRT — NO RIGHT TURN ILLUMINATED SIGN — NLT — NO LEFT TURN

ILLUMINATED STOP SIGN.

HIGHWAY CROSSING SIGNALS.

10. SYMBOLS SHOWN FOR POSITION LIGHT SIGNALS SHOULD BE USED FOR OTHER TYPE SIGNALS ON NEW PLANS.

ALL SIGNALS ON PLAN ARE THE SAME TYPE, A NOTE WILL BE PLACED ON PLAN GIVING THE TYPE OF SIGNALS. WHEN OTHER THAN THE TYPE OF SIGNAL IS SHOWN ON PLAN THE ABBREVIATION SHALL BE PLACED AT EACH SIGNAL TO INDICATE THE TYPE OF SIGNAL AS FOLLOWS:-

E - ELECTRIC SEMAPHORE
EP - ELECTRO-PNEUMATIC SEMAPHORE
M - MECHANICAL SEMAPHORE
P - POSITION LIGHT
EP - COLOR POSITION LIGHT
C - COLOR LIGHT
SL - SEARCH LIGHT

11. FIRE TRUCK BLOCKING DEVICE.

12. SWITCH INDICATOR.

13. TORPEDO, PLACING MACHINE AND ILLUMINATED "T" SIGN.

14. WYE PROTECTION.

15. FLASHING TRAIN ORDER SIGNAL.

16. MODERN TYPE SIGN.

17. PURSE BRANK INDICATOR.

18. COLOR COUNTER PANEL.

5. WHERE A "STOP THEN PROCEED" INDICATION MAY BE DISPLAYED, MARKER LIGHT SHALL BE INCLUDED IN SYMBOL FOR GROUND MOUNT.

6. COLOR LIGHT SIGNALS.
USE SEMAPHORE CHARACTERS INCLOSED IN A CIRCLE. (SEE NOTE 1 ABOVE NEW PLANS.)

7. SWITCHBOARD SIGNALS.

8. DRONE SIGNAL.

9. ARROW TRIANGULAR (SEE NOTE 2 ABOVE)

SHEET 10 OF 7

THE PE

CIRCUIT CONTROLLER CONTACTS

CONTACTS ACTUATED MECHANICALLY BY INTERLOCKING MACHINE LEVER

LEVERS WITH END POSITION AS NORMAL

N – NORMAL POSITION.
A – LEVER SLIGHTLY MOVED FROM N TOWARD B.
X – LEVER SLIGHTLY MOVED FROM B TOWARD N.
B – NORMAL INDICATION POSITION.
C – CENTRAL POSITION.
D – REVERSE INDICATION POSITION.
Y – LEVER SLIGHTLY MOVED FROM D TOWARD R.
E – LEVER SLIGHTLY MOVED FROM R TOWARD D.
R – REVERSE POSITION.

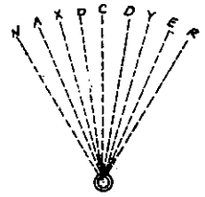

LEVERS WITH MIDDLE POSITION AS NORMAL

L – REVERSE POSITION TO LEFT.
A – LEVER SLIGHTLY MOVED FROM L TOWARD B.
X – LEVER SLIGHTLY MOVED FROM B TOWARD L.
B – INDICATION POSITION TO LEFT.
K – LEVER SLIGHTLY MOVED FROM N TOWARD B.
N – NORMAL POSITION.
T – LEVER SLIGHTLY MOVED FROM N TOWARD D.
D – INDICATION POSITION TO RIGHT.
Y – LEVER SLIGHTLY MOVED FROM D TOWARD R.
E – LEVER SLIGHTLY MOVED FROM R TOWARD D.
R – REVERSE POSITION TO RIGHT

POSITIONS INDICATED

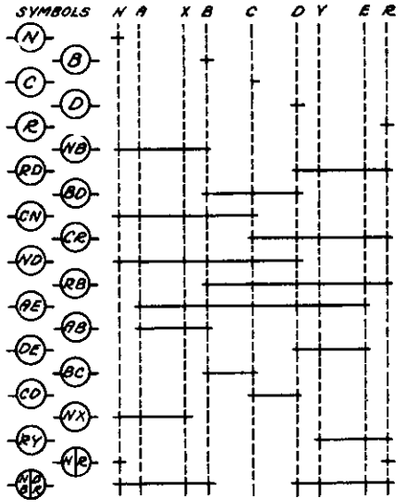

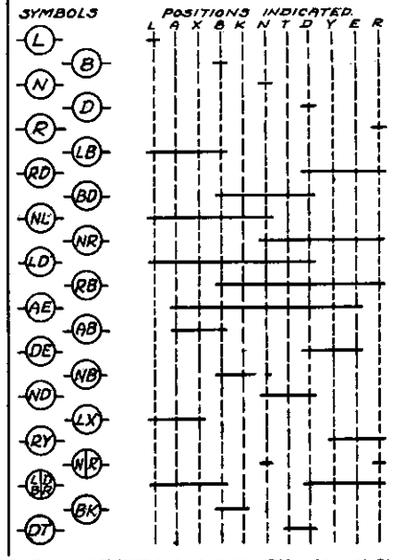

HORIZONTAL LINES INDICATE THAT PORTION OF THE CYCLE OF LEVER MOVEMENT DURING WHICH THE CIRCUIT IS CLOSED

INDEPENDENT TYPE CONTACT

HIGH VOLTAGE TYPE CONTACT

DEPENDENT TYPE CONTACT (N) (R)

VERTICAL LINE BETWEEN LETTERS IN A SYMBOL INDICATES THAT THE CIRCUIT IS CLOSED AT AND OPEN BETWEEN POINTS INDICATED.

QUICK ACTING CIRCUIT CONTROLLERS SHALL BE DESIGNATED BY THE LETTER "Q". CONTACTS ON SWITCH LEVERS DESIGNATED "N" & "R" SHALL BE DESIGNATED "NS" & "RS" ON SB MACHINES AND SHALL BE SO ADJUSTED AS NOT TO BREAK WHILE THE LEVER IS MECHANICALLY LOCKED NORMAL OR REVERSE RESPECTIVELY BUT MUST BREAK BEFORE THE DETECTOR LOCKING TOOTH IS REACHED.

CIRCUIT CONTROLLERS OPERATED BY SEMAPHORE SIGNALS.

	THREE POSITION 0°-45°-90°	TWO POSITION 0°-45°	TWO POSITION 0°-90°	TWO POSITION 45°-90°
CLOSED AT 0° ONLY				
CLOSED AT 45° ONLY				
CLOSED AT 90° ONLY				
CLOSED 0° TO 45°				
CLOSED 45° TO 90°				

40° TO 75°

WHERE SPECIAL CONDITIONS MUST BE COVERED, SYMBOL SHALL BE ARRANGED SIMILAR TO ILLUSTRATION, THE DEGREES THROUGH WHICH CIRCUIT IS CLOSED BEING INDICATED.

AIR BREAK SWITCH

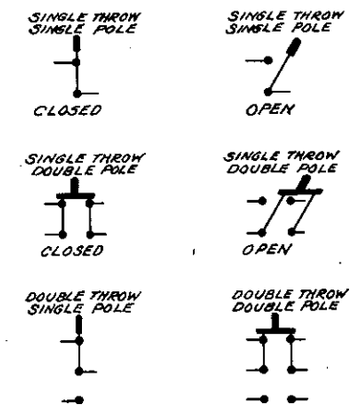

LEVER LATCH

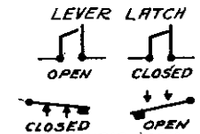

ELECTRIC LOCK ARMATURE.

FLOOR PUSH

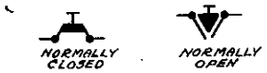

BRIDGE CIRCUIT CONTROLLER

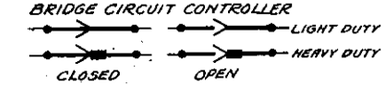

STRAP KEY OR PUSH BUTTON

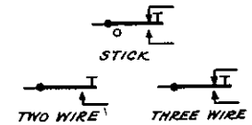

TRACK INSTRUMENT

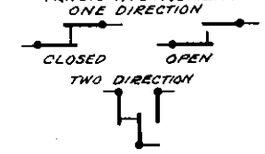

TIME RELEASE

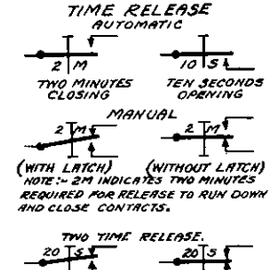

SPECIAL CONTROLLER

(USE AND OPERATION TO BE NOTED)

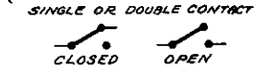

MULTICONTACT

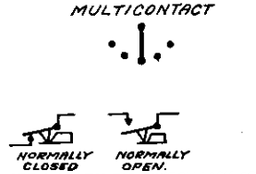

CONTACTS ON ELECTRIC SWITCH LOCK OPERATED BY CAM WHEN PADLOCK IS REMOVED.

TRAIN STOP

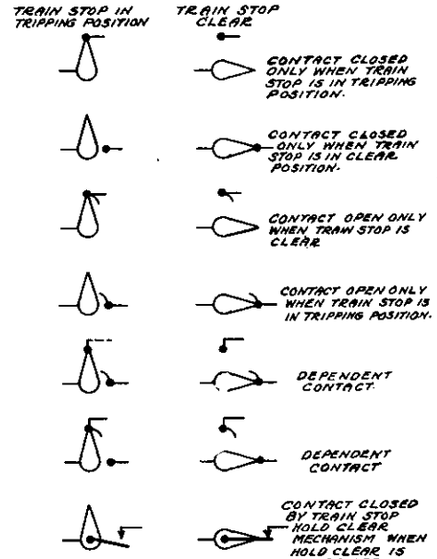

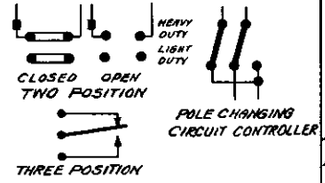

SWITCH CIRCUIT CONTROLLER

REVISIONS

APRIL 12, 1947. SYMBOLS FOR CIRC. CONTROLLER CONTACTS CHANGED, ELEC. LOCK ARMATURE AND CONTACTS OPERATED BY PADLOCK ON ELEC. SW. LOCK ADDED TO AGREE WITH P.R.R. 516 SEC. DWGS. 16758 & 16768 APPROVED MAR., 1944.
APPROVED:
H.C. Goffeil
J.G.N.

SUPERSEDES PLAN S-601 DATED 12-27-24.

SHEET 4 OF 7

S-601-A

THE PENNSYLVANIA RAILROAD
STANDARD
SYMBOLS

OFFICE OF CHIEF SIGNAL ENGINEER
PHILA., PA., JULY 23, 1935
Approved:
Chief Signal Engineer

NOT TO SCALE
Approved:
Chief Engineer

RELAYS

DIRECT CURRENT

- NEUTRAL SINGLE WINDING
- NEUTRAL DOUBLE WINDING
- P — POLARIZED DOUBLE WOUND.
- SLOW DROP AWAY
- SLOW PICK UP
- SLOW DROP AWAY AND SLOW PICK UP
- P — POLAR BIASED ARROW DENOTES DIRECTION OF BIAS.
- P — POLARIZED.
- P — RETAINED NEUTRAL POLARIZED
- QUICK DROP AWAY
- QUICK PICK UP
- QUICK DROP AWAY AND QUICK PICK UP.
- CF — CODE FOLLOWING
- TA — TUNED ALTERNATOR
- TH — THERMAL RELAY
- TE — TIME ELEMENT
- FLASHER
- INTERLOCKING

ALTERNATING CURRENT

- O — OVERLOAD
- O S — OVERLOAD DOUBLE WINDING
- CT — CODE TRANSMITTER OSCILLATING OR PENDULUM TYPE SINGLE WINDING.
- RELAY WITH FULL WAVE RECTIFIER
- RELAY WITH RESISTOR SNUB
- RELAY WITH RECTIFIER SNUB
- RELAY WITH RESISTOR-RECTIFIER SNUB
- PLUG-IN RELAY
- 2 POSITION SINGLE ELEMENT
- 2 POSITION DOUBLE ELEMENT
- THREE POSITION
- SLOW DROP AWAY
- QUICK PICK UP AND DROP AWAY
- F — 2 POSITION SINGLE ELEMENT FREQUENCY
- F — 2 POSITION DOUBLE ELEMENT FREQUENCY
- CT — CODE TRANSMITTER.
- O.T. 12KC — TRANSMITTER
- R. 12KC — RECEIVER

CARRIER UNITS

- 180 DU — NUMBER INDICATES CODE PER MINUTE TO WHICH UNIT IS TUNED.

DECODING UNIT

- 1 2 3 4 5 AS — ARC SUPPRESSOR.

RELAY CONTACTS

- NEUTRAL FRONT CONTACT CLOSED RELAY ENERGIZED.
- NEUTRAL FRONT CONTACT OPEN RELAY DE-ENERGIZED.
- NEUTRAL BACK CONTACT OPEN
- NEUTRAL BACK CONTACT CLOSED
- NEUTRAL FRONT AND BACK CONTACT
- POLAR OR 3 POSITION CONTACT CLOSED NORMAL.
- POLAR OR 3 POSITION CONTACT CLOSED REVERSE.
- POLAR OR 3 POSITION CONTACT CLOSED IN THE NORMAL OR REVERSE POSITION
- POLAR OR 3 POSITION RELAY CONTACT CLOSED IN THE NORMAL AND REVERSE POSITION.
- 3 POSITION CONTACT CLOSED IN DE-ENERGIZED POSITION.
- HIGH CURRENT
- HIGH VOLTAGE
- HIGH VOLTAGE AND HIGH CURRENT
- 120 — CODE TRANSMITTER CONTACTS (120 BREAKS PER MINUTE)
- CODING CONTACT
- MAKE BEFORE BREAK CONTACTS
- SOLENOID CONTACT- CLOSED
- SOLENOID CONTACT- OPEN
- X — FLAGMAN CONTACT (CLOSED WHEN ARMATURE IS LOCKED)
- CHECKING CONTACT ON THERMAL RELAY OR TIME DEVICES.
- MAGNETIC BLOWOUT
- THERMAL
- TUNED ALTERNATOR

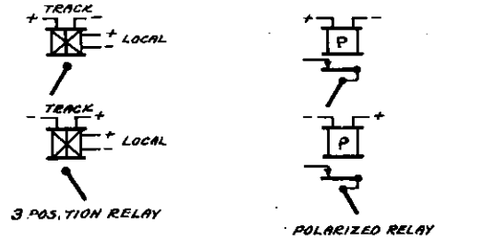

POSITION OF CONTACTS WITH RELATION TO POLARITIES

INDICATORS AND LOCKS

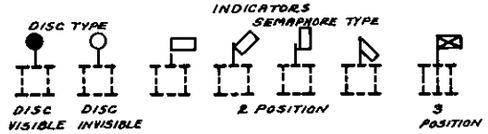

ELECTRIC LOCKS

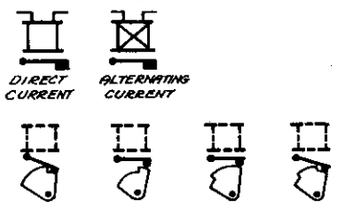

ELECTRIC LOCKS FOR MECHANICAL MACHINE SHOW SEGMENTS FOR LEVER IN NORMAL POSITION.

K — ELECTRIC LOCKS - POWER OR ELECTRO-MECHANICAL MACHINES. SEGMENTS & QUADRANTS TO BE USED SHALL BE SPECIFIED ON SPRING COMBINATION SHEET.

NOTE:- ABOVE SYMBOLS MAY BE COMBINED AS REQUIRED.

RELAYS DESIGNED FOR NON-VITAL CIRCUITS SHALL BE SHOWN THUS [L] WITH CHARACTERISTICS INDICATED ABOVE.

ALL SPECIAL FEATURES NOT COVERED BY SYMBOLS TO BE NOTED ON CIRCUIT PLANS.

REVISIONS

APRIL 12, 1947. SYMBOLS FOR RELAYS MODIFIED TO AGREE WITH P.R.R. STR. SEC. DWG. 16738 APPROVED MAR. 1944 AND SYMBOLS FOR CARRIER UNITS ADDED.
APPROVED:
H.C. Griffith
J.H.G.H.

SUPERSEDES PLAN S-601 DATED 12-27-24.

SHEET 5 OF 7

S-601-A

THE PENNSYLVANIA RAILROAD
STANDARD
SYMBOLS

OFFICE OF CHIEF SIGNAL ENGINEER
PHILA., PA., JULY 23, 1935.
Approved:
Chief Signal Engineer

NOT TO SCALE
Approved:
Chief Engineer

N.E.C.
J.H.G.
C.J.B.
E.H.S.

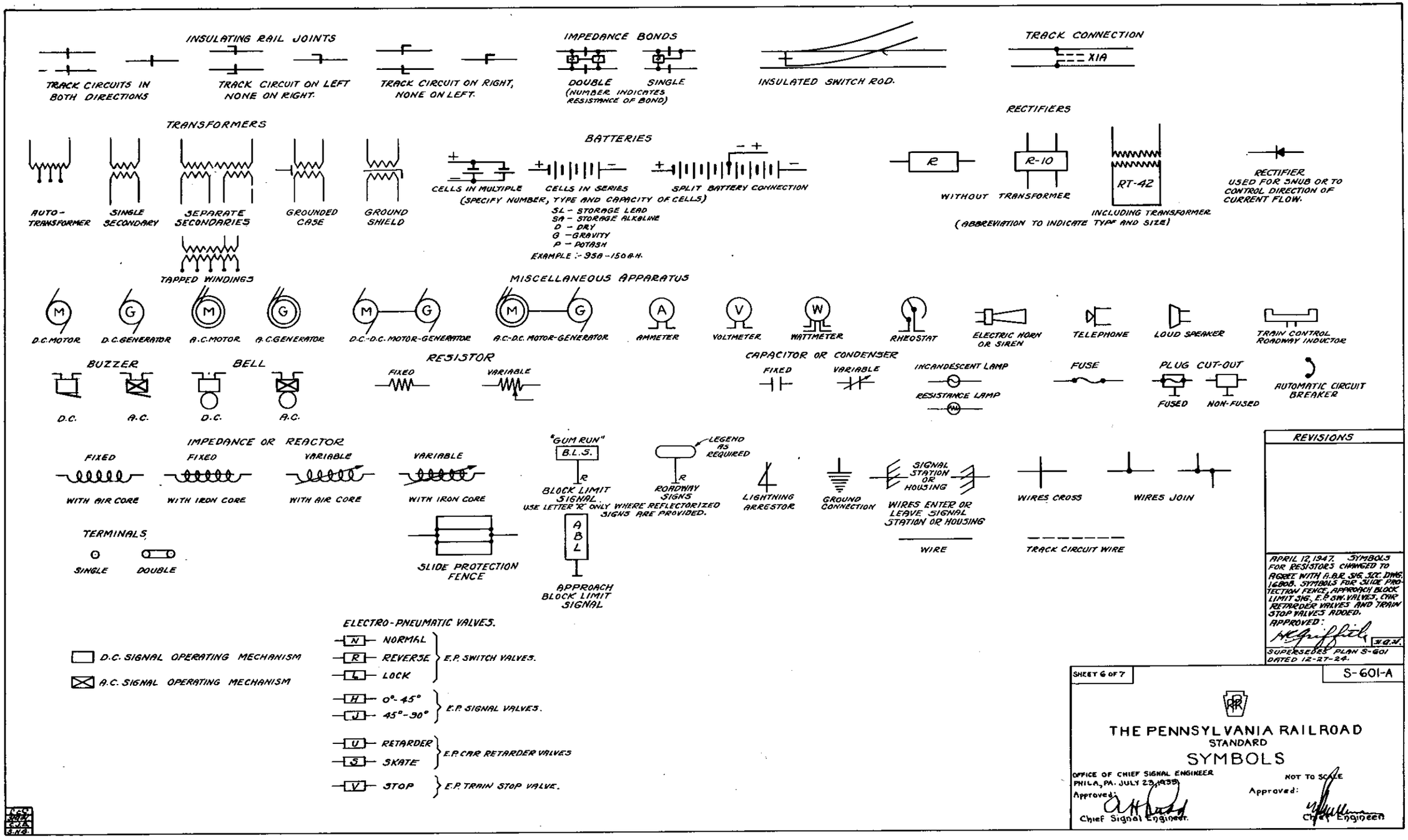
INSULATING RAIL JOINTS
TRACK CIRCUITS IN BOTH DIRECTIONS
TRACK CIRCUIT ON LEFT NONE ON RIGHT.
TRACK CIRCUIT ON RIGHT, NONE ON LEFT.
IMPEDANCE BONDS
DOUBLE
SINGLE
(NUMBER INDICATES RESISTANCE OF BOND)
INSULATED SWITCH ROD.
TRACK CONNECTION
XIA
TRANSFORMERS
AUTO-TRANSFORMER
SINGLE SECONDARY
SEPARATE SECONDARIES
GROUNDED CASE
GROUND SHIELD
TAPPED WINDINGS
BATTERIES
CELLS IN MULTIPLE
CELLS IN SERIES
SPLIT BATTERY CONNECTION
(SPECIFY NUMBER, TYPE AND CAPACITY OF CELLS)
SL - STORAGE LEAD
SA - STORAGE ALKALINE
D - DRY
G - GRAVITY
P - POTASH
EXAMPLE :- 9SA-150A.H.
RECTIFIERS
R
WITHOUT TRANSFORMER
R-10
RT-42
INCLUDING TRANSFORMER
(ABBREVIATION TO INDICATE TYPE AND SIZE)
RECTIFIER USED FOR SNUB OR TO CONTROL DIRECTION OF CURRENT FLOW.
MISCELLANEOUS APPARATUS
M
G
D.C. MOTOR
D.C. GENERATOR
A.C. MOTOR
A.C. GENERATOR
D.C.-D.C. MOTOR-GENERATOR
A.C.-D.C. MOTOR-GENERATOR
A
AMMETER
V
VOLTMETER
W
WATTMETER
RHEOSTAT
ELECTRIC HORN OR SIREN
TELEPHONE
LOUD SPEAKER
TRAIN CONTROL ROADWAY INDUCTOR
BUZZER
D.C.
A.C.
BELL
D.C.
A.C.
RESISTOR
FIXED
VARIABLE
CAPACITOR OR CONDENSER
FIXED
VARIABLE
INCANDESCENT LAMP
RESISTANCE LAMP
FUSE
PLUG CUT-OUT
FUSED
NON-FUSED
AUTOMATIC CIRCUIT BREAKER
IMPEDANCE OR REACTOR
FIXED
WITH AIR CORE
FIXED
WITH IRON CORE
VARIABLE
WITH AIR CORE
VARIABLE
WITH IRON CORE
"GUM RUN"
B.L.S.
R
BLOCK LIMIT SIGNAL.
USE LETTER "R" ONLY WHERE REFLECTORIZED SIGNS ARE PROVIDED.
LEGEND AS REQUIRED
R
ROADWAY SIGNS
LIGHTNING ARRESTOR
GROUND CONNECTION
SIGNAL STATION OR HOUSING
WIRES ENTER OR LEAVE SIGNAL STATION OR HOUSING
WIRES CROSS
WIRES JOIN
TERMINALS
SINGLE
DOUBLE
SLIDE PROTECTION FENCE
A
B
L
APPROACH BLOCK LIMIT SIGNAL
WIRE
TRACK CIRCUIT WIRE
D.C. SIGNAL OPERATING MECHANISM
A.C. SIGNAL OPERATING MECHANISM
ELECTRO-PNEUMATIC VALVES.
N NORMAL
R REVERSE
L LOCK
E.P. SWITCH VALVES.
H 0°-45°
J 45°-90°
E.P. SIGNAL VALVES.
U RETARDER
S SKATE
E.P. CAR RETARDER VALVES
V STOP
E.P. TRAIN STOP VALVE.
REVISIONS
APRIL 12, 1947. SYMBOLS FOR RESISTORS CHANGED TO AGREE WITH A.R.R. SIG. SCC. DWG. 16808. SYMBOLS FOR SLIDE PROTECTION FENCE, APPROACH BLOCK LIMIT SIG., E.P. SW. VALVES, CAR RETARDER VALVES AND TRAIN STOP VALVES ADDED.
APPROVED:
W.G.N.
SUPERSEDES PLAN S-601 DATED 12-27-24.
SHEET 6 OF 7
S-601-A
THE PENNSYLVANIA RAILROAD
STANDARD
SYMBOLS
OFFICE OF CHIEF SIGNAL ENGINEER
PHILA., PA. JULY 23, 1935
NOT TO SCALE
Approved:
Chief Signal Engineer.
Approved:
Chief Engineer

SYMBOLS

10 — T10 SWITCH & LOCK MOVEMENT

20 — T20 SWITCH & LOCK MOVEMENT

B — BETHLEHEM SWITCH & LOCK MOVEMENT

C — NEW CENTURY SWITCH STAND.

● L — LOW SWITCH LAMP.

● I — INTERMEDIATE SWITCH LAMP.

● H — HIGH SWITCH LAMP.

⊗ L — LOW REFLECTOR INDICATOR

⊗ I — INTERMEDIATE REFLECTOR INDICATOR.

⊗ H — HIGH REFLECTOR INDICATOR.

○ L — LOW TARGET (NO LAMP OR REFLECTOR INDICATOR)

○ I — INTERMEDIATE TARGET (NO LAMP OR REFLECTOR INDICATOR)

○ H — HIGH TARGET (NO LAMP OR REFLECTOR INDICATOR)

HD — HEAVY DUTY CIRCUIT CONTROLLER

LD — LIGHT DUTY CIRCUIT CONTROLLER

PD — POINT DETECTOR.

HO — HAND OPERATED

PC — PIPE CONNECTED. (NOT NECESSARY TO INDICATE WHERE S-232 AND S-233 ARE PROVIDED).

APPLICATION OF SYMBOLS

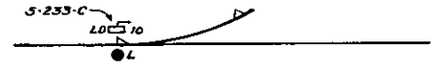

T-10 SWITCH & LOCK MOVEMENT WITH LIGHT DUTY CIRCUIT CONTROLLER AND LOW SWITCH LAMP.

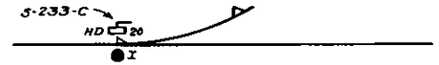

T20 SWITCH & LOCK MOVEMENT WITH HEAVY DUTY CIRCUIT CONTROLLER AND INTERMEDIATE SWITCH LAMP.

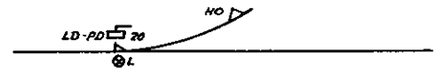

T20 SWITCH & LOCK MOVEMENT WITH LIGHT DUTY CIRCUIT CONTROLLER, POINT DETECTOR, LOW REFLECTOR INDICATOR AND HAND-OPERATED DERAIL.

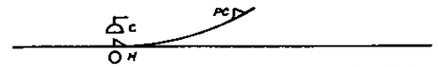

NEW CENTURY STAND WITH HIGH TARGET AND PIPE CONNECTED DERAIL.

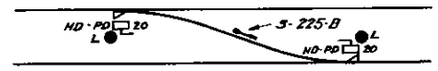

T20 SWITCH & LOCK MOVEMENT WITH HEAVY DUTY CIRCUIT CONTROLLER, POINT DETECTORS, LOW SWITCH LAMPS AND CENTER LOCKING DEVICE.

RUNS OF CONNECTIONS

PIPE (MECHANICAL)

UNDERGROUND OR AERIAL CABLE (NOT IN DUCT)

WIRE DUCT

COMPRESSED AIR

MECHANICAL PIPE & DUCT

MECHANICAL PIPE AND AIR

DUCT AND AIR

MECHANICAL PIPE DUCT AND AIR

AIR PIPE AND FITTINGS

EXPANSION JOINT

TEE

PIPE ANCHOR

REDUCER OR BUSHING (POINT TO SMALLER PIPE)

UNION

COMBINATION COCK AND UNION

MANIFOLD CONDENSER

MAIN RESERVOIR

AUXILIARY RESERVOIR

PLUG COCK (DRAIN OR BLOW OFF)

VALVE

ET

ENGINE TAP

REVISIONS

SYMBOLS FOR HAND-OPERATED SWITCH MECHANISMS, SWITCH TARGETS, ETC., DRAWN FROM SKETCH PLAN DATED 3-24-41.

SHEET 7 OF 7

S-601-A

THE PENNSYLVANIA RAILROAD
STANDARD
SYMBOLS

OFFICE OF CHIEF ENGINEER,
PHILA., PA., APRIL 12, 1947.

NOT TO SCALE

APPROVED:
ASST. CHIEF ENGINEER - T.C.&S.

APPROVED:
CHIEF ENGINEER.

sta.

RULE	INDICATION	NAME	FIGURE A	B	C	D	E	F	G
280	PROCEED; MANUAL BLOCK CLEAR.	CLEAR-BLOCK							
281	PROCEED.	CLEAR							
282	PROCEED APPROACHING NEXT SIGNAL AT MEDIUM SPEED. NOTE-TRAINS MAY PROCEED APPROACHING NEXT SIGNAL AT NOT EXCEEDING 45 MILES PER HOUR AT SIGNALS DISPLAYING A YELLOW TRIANGLE OUTLINED IN BLACK.	APPROACH-MEDIUM							
283	PROCEED; MEDIUM SPEED WITHIN INTERLOCKING LIMITS. NOTE-TRAINS MAY PROCEED AT NOT EXCEEDING 45 MILES PER HOUR AT SIGNALS DISPLAYING A YELLOW TRIANGLE OUTLINED IN BLACK.	MEDIUM-CLEAR							
285	PROCEED PREPARED TO STOP AT NEXT SIGNAL. TRAIN EXCEEDING MEDIUM SPEED MUST AT ONCE REDUCE TO THAT SPEED.	APPROACH							
285 A	TRAIN EXCEEDING MEDIUM SPEED MUST AT ONCE REDUCE TO THAT SPEED. WHERE A FACING SWITCH IS CONNECTED WITH THE SIGNAL, APPROACH THAT SWITCH PREPARED TO STOP. APPROACH NEXT SIGNAL PREPARED TO STOP.	CAUTION							
287	PROCEED; SLOW SPEED WITHIN INTERLOCKING LIMITS.	SLOW-CLEAR							
288	PROCEED PREPARED TO STOP AT NEXT SIGNAL. SLOW SPEED WITHIN INTERLOCKING LIMITS.	SLOW-APPROACH							
289	BLOCK OCCUPIED; FOR PASSENGER TRAINS, STOP; FOR TRAINS OTHER THAN PASSENGER TRAINS, PROCEED PREPARED TO STOP SHORT OF A TRAIN OR OBSTRUCTION, BUT NOT EXCEEDING 15 MILES PER HOUR.	PERMISSIVE-BLOCK							
290	PROCEED AT RESTRICTED SPEED.	RESTRICTING							
291	STOP; THEN PROCEED AT RESTRICTED SPEED. NOTE-FREIGHT TRAINS OF 90 OR MORE CARS OR HAVING TONNAGE OF 80% OR MORE OF THE PRESCRIBED ENGINE RATING MAY PROCEED AT RESTRICTED SPEED WITHOUT STOPPING AT SIGNALS DISPLAYING A YELLOW DISK ON WHICH IS SHOWN THE LETTER "G" IN BLACK.	STOP-AND-PROCEED							
292	STOP.	STOP-SIGNAL							
293	LIMIT OF THE BLOCK. NOTE-FIG. A- YELLOW LIGHT TO BE PLACED NEXT TO TRACK GOVERNED.	BLOCK-LIMIT	STATION NAME						
293 A	PROCEED PREPARED TO STOP AT NEXT BLOCK-LIMIT SIGNAL. TRAIN EXCEEDING MEDIUM SPEED MUST AT ONCE REDUCE TO THAT SPEED. NOTE-WILL NOT APPLY TO TRAINS AUTHORIZED TO PASS THE BLOCK-LIMIT STATION AS THOUGH CLEAR-BLOCK SIGNAL WERE DISPLAYED.	APPROACH BLOCK-LIMIT	REFLECTOR BUTTONS						
294	ORDERS. NOTE-FIG. A- TO APPLY TO TRAINS GOVERNED BY FIXED SIGNAL WITH WHICH CONNECTED. NOTE-FIG. B- BY DAY THE YELLOW LAMP IS NOT DISPLAYED.	TRAIN-ORDER	FLASHING ILLUMINATED LETTER "O"						

NOTE:-

IN THE ILLUSTRATION OF TYPICAL ASPECTS, RULES 280 TO 294, INCLUSIVE:

R — RED
P — PURPLE
Y — YELLOW
G — GREEN

SPEEDS

MEDIUM SPEED - NOT EXCEEDING ONE-HALF THE SPEED AUTHORIZED FOR PASSENGER TRAINS BUT NOT EXCEEDING 30 MILES PER HOUR.

REDUCED SPEED — PREPARED TO STOP SHORT OF TRAIN OR OBSTRUCTION.

SLOW SPEED - NOT EXCEEDING 15 MILES PER HOUR.

RESTRICTED SPEED - NOT EXCEEDING 15 MILES PER HOUR PREPARED TO STOP SHORT OF TRAIN, OBSTRUCTION OR SWITCH NOT PROPERLY LINED AND TO LOOK OUT FOR BROKEN RAIL.

REVISIONS

REDRAWN FROM APPROVED PLAN S-602-F, DATED JANUARY 5, 1938 AND REVISED.
H SEPTEMBER 10, 1942. INDICATION FOR RULE 224 MODIFIED
APPROVED N. L. Stanton

I JUNE 7, 1944. RULE 293 A ADDED.
APPROVED N. L. Stanton

J AUGUST 29, 1944. RULES 282 & 283 CHANGED-NOTE ADDED-EFFECTIVE 9-15-44
APPROVED N. L. Stanton

K MARCH 14, 1945. NOTE FOR RULE 283 CORRECTED.
APPROVED H. C. Griffith

L SEPTEMBER 28, 1948 RULE 289 CHANGED AND RULE 294 REARRANGED
APPROVED H. C. Griffith

1 SHEET

S-602-L

THE PENNSYLVANIA RAILROAD

STANDARD

SIGNAL ASPECTS

OFFICE OF CHIEF ENGINEER, PHILA., PA., JULY 12, 1941.

Approved N. L. Stanton
Assistant Chief Engineer-Signals

Approved W. Dugan
Chief Engineer

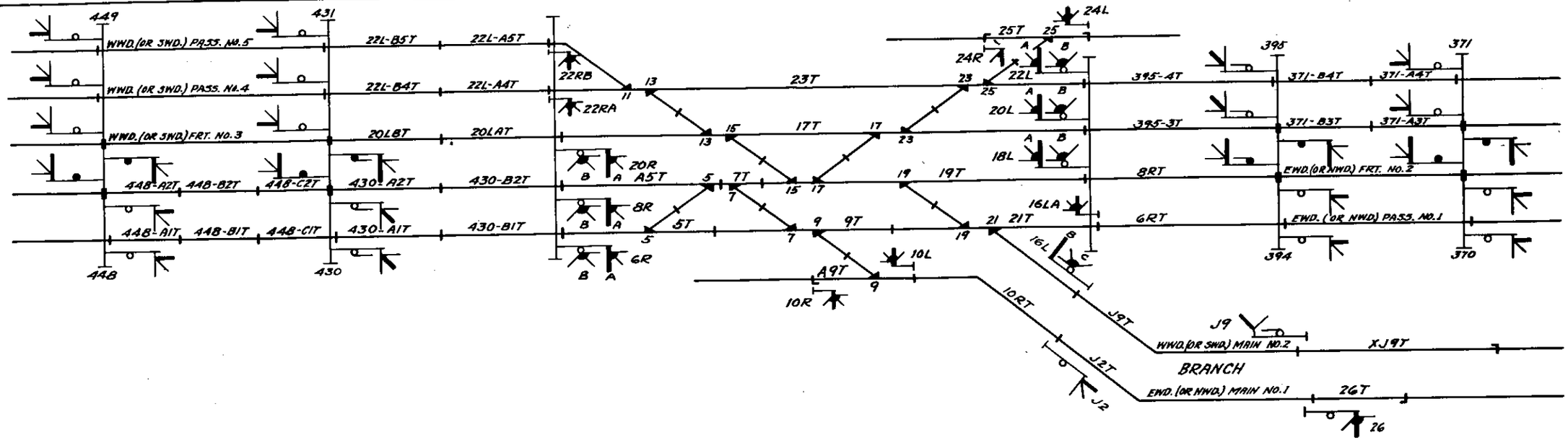

OUTSIDE INTERLOCKING LIMITS

TRACK CIRCUITS SHALL BE DESIGNATED BY THE LETTER T PRECEDED BY THE SIGNAL NUMBER AND TRACK INVOLVED, EXCEPT IN THE CASE OF TRACK CIRCUITS INVOLVING LEVER CONTROLLED SIGNALS, WHERE THE SIGNAL NUMBER IS SUFFICIENT PREFIX.

PROGRESSIVE ALPHABETICAL PREFIXES SHALL BE USED IN THE CASE OF A PLURALITY OF TRACK SECTIONS OVER WHICH ONE SIGNAL GOVERNS.

ON TRACKS SIGNALED FOR MOVEMENTS IN BOTH DIRECTIONS PREFERENCE SHALL BE GIVEN TO THE NORMAL DIRECTION.

WHERE NOT MORE THAN TWO TRACKS ARE INVOLVED REFERENCE TO THE TRACK NUMBER MAY BE OMITTED FROM TRACK CIRCUIT DESIGNATION. FOR EXAMPLE:- 448AT, 448BT, 448CT, 395T.

ARBITRARY DESIGNATIONS SUCH AS AIT, BIT, A2T, B2T, ETC. MAY BE USED WHERE NO FIXED WAYSIDE SIGNALS ARE INVOLVED.

WITHIN INTERLOCKING LIMITS

TRACK CIRCUITS SHALL BE DESIGNATED BY THE LETTER T PRECEDED BY THE NUMBER OF A MOVABLE POINT FROG, SWITCH OR DERAIL LYING WITHIN THE TRACK CIRCUIT.

PREFERENCE IN DETERMINING DESIGNATIONS SHALL BE AS FOLLOWS:- MOVABLE POINT FROG, FIRST FACING POINT SWITCH IN NORMAL DIRECTION, FIRST TRAILING POINT SWITCH IN NORMAL DIRECTION AND DERAIL.

WHERE ONLY ONE CROSSOVER IS LOCATED WITHIN TRACK CIRCUITS ON ADJACENT TRACKS USE PREFIX LETTER "A" FOR TRACK CIRCUIT IN WHICH TRAILING END OF CROSSOVER IS LOCATED. FOR EXAMPLE SEE 5T AND A5T.

TRACK RELAYS

TRACK RELAYS SHALL TAKE THE DESIGNATION OF THE TRACK CIRCUIT TO WHICH THEY ARE CONNECTED FOLLOWED BY THE LETTER "R". FOR EXAMPLE:- 5TR, A5TR, 371-A4TR, 371-B4TR, 395-4TR, 10RTR, AITR, ETC.

WHERE A FLOATING TRACK RELAY IS CONNECTED TO A CROSSOVER OR TURNOUT FOR CAB SIGNAL OVERRUN PROTECTION (PLAN S-881) IT SHALL TAKE DESIGNATION OF CROSSOVER OR TURNOUT TO WHICH IT IS CONNECTED FOLLOWED BY THE LETTERS "XTR". FOR EXAMPLE:- 21XTR, 23XTR. WHERE SUCH RELAYS ARE CONNECTED TO BOTH EAST AND WEST ENDS OF CROSSOVER, DESIGNATION SHALL HAVE PREFIX "E" & "W". FOR EXAMPLE:- E21XTR, W21XTR.

REVISIONS

SUPERSEDES APPROVED PLAN S-801, 1 SHEET, DATED 11-1-26.

1 SHEET

S-801

THE PENNSYLVANIA RAILROAD
STANDARD

TRACK CIRCUIT DESIGNATIONS

OFFICE OF CHIEF ENGINEER,
PHILA., PA., APRIL 15, 1947.

NOT TO SCALE

APPROVED: H. G. Griffith
ASST. CHIEF ENGINEER, T-C-S.

APPROVED: J. Quigley
CHIEF ENGINEER.

INSTRUMENTS AND APPARATUS		DESIGNATION P.R.R.	DESIGNATION A.A.R.	EXAMPLES & EXPLANATIONS.	
AUXILIARY CIRCUIT CONTROLLERS		SC	CC	1SC, 2SC — 1CC, 2CC	
AUTOMATIC SHORT ARM GATES		G	XG	1G, 2G - 1XG, 2XG (2GA, 2GB - 2XGA, 2XGB TWO GATES ON SAME SIDE)	
AUTOMATIC SHORT ARM GATE LIGHTS		GA, GB, GS		1GA, 1GB, 1GS. (S - STEADILY BURNING LAMP)	
BATTERY DESIGNATIONS	CABIN OR CENTRAL LOCATIONS	M, M1, M2		B(M), C(M), B(M1), C(M1)	
	HOME SIGNAL LOCATIONS	HA, HB, 26L		B(HA), C(HA), B(26L), C(26L) - 26L IS DESIGNATION OF INSTRUMENT CASE	
	DISTANT & AUTOMATIC SIGNAL LOCATIONS.	731, 834		B(731), C(731), B(834), C(834) - NUMBER IS TAKEN FROM SIGNAL NUMBER.	
	HIGHWAY CROSSING AND CUT-SECTION LOCATIONS	741, 824		B(741), C(741), - 741, 824 - LOCATION NUMBER TAKEN FROM NEAREST MILE POST	
	COMMONS TO DISTANT SIGNAL LOCATION AND BEYOND.	CE	EC	COMMONS TO THE EAST	
		CW	WC	" " " WEST	
		CN	NC	" " " NORTH	
		CS	SC	" " " SOUTH	
ELECTRIC SWITCH LOCKS		WK	WL	AWK, 17WK, 19WKA, 19WKB	
HIGHWAY CROSSING SIGNALS	CROSSING BELLS	VB	XX	1VB, 2VB - 1XX, 2XX	USE ODD NUMBERS NORTH OR WEST OF TRACK, EVEN NUMBERS SOUTH OR EAST OF TRACK.
	FLASHING LIGHT SIGNALS	CL		1CL, 2CL	
	LAMP UNITS ON FLASHING LIGHT SIGNALS	CLA, CLB, CLC, CLD		1CLA, 1CLB, 1CLC, 1CLD 2CLA, 2CLB, 2CLC, 2CLD	
INDICATION LIGHTS		EL	K	2RPEL, 26LPEL, 5FL — 2RAK, 26LAK, 5K	
INDICATION LOCKS		K	M OR L	2K, 4K - 2M, 4L (SEE SH. 5)	WHERE ONE LOCK IS USED ON LEVER
		SK	M	4SK - 4M - SIGNAL INDICATION LOCK	WHERE MORE THAN ONE LOCK IS USED ON LEVER
		TK	FL	4TK - 4FL - TRAFFIC LOCK	
		NK	NM	3NK - 3NM - NORMAL IND. LOCK	
		RK	RM	3RK - 3RM - REVERSE IND. LOCK	
		DK	L	3DK - 3L - DETECTOR LOCK	
PANEL TYPE BLOCKING DEVICE		W, E, N, S		1W, 1E, 2W, 2E 1S, 1N, 2S, 2N	1 & 2 - TRACK NUMBERS W, E, N, S - WEST, EAST, NORTH OR SOUTH SIDE OF PANEL TURNBUTTON IS LOCATED
SIGNALS		A, B, C, D		2RA, 2RB, 2RC 8LA, 8LB 26A, 26B, 26C	SIGNAL NUMBER FOLLOWED BY A, B, C, ETC, FOR EACH ARM AND SIGNAL CONTROLLED BY SAME LEVER OPERATION.
SIGNAL LIGHT WIRES		L	E	2RASL, 2RAHL, 2RAJL — 2RARE, 2RAHE, 2RADE	
SIGNAL REPEATING INDICATORS		M	GK	1M, 2M, 8RM — 1RGK, 2HGK (SEE SH. 4)	
SMASHBOARDS		SB		4SB, 6SBA, 6SBB	
SPRING COMBINATION (CROSS REFERENCES WHERE JUMPERS ARE NOT SHOWN)		X7-22L		X = JUMPER; 7 = LEVER TO WHICH JUMPER GOES; 22 = GROOVE TO WHICH JUMPER GOES; L = SIDE OF BAND JUMPER IS CONNECTED TO.	
TIME RELEASES		SR	TE	SR, ASR, BSR, 2SR, 6RSR, 8LSR — 2TE, GRTE	
TORPEDO PLACING MACHINES		TP		1TP, 2TP - 1 & 2 = TRACK NUMBERS	
TRACK INSTRUMENTS		T, TE, TW		1TE, 1TW - ONE DIRECTION, 1T, 2T - TWO DIRECTIONS	
TRACK RELAY LOCALS		TL	TQ	4LTL, 7TL, 11BTL, 141-3TL — 11BTQ, 141-3TQ	
TRAFFIC LOCK INSTRUMENTS (WHERE TRAFFIC LEVERS ARE NOT AVAILABLE)		F	FL	1F, 2F, 3EF, 3WF — 1FL, 3EFL	
TRAIN ORDER SIGNALS		TO		ATO, BTO	
TRAIN STOPS		TS	V	04LTS, W27TS — 04LV, W27V	

RELAYS		DESIGNATION P.R.R.	DESIGNATION A.A.R.	EXAMPLES & EXPLANATIONS	
AIR PRESSURE INDICATION RELAYS		AP20M	AP20PSR	RELAY RELEASES WHEN AIR PRESSURE DROPS BELOW 20 POUNDS.	
		AP45M	AP45PR	RELAY RELEASES WHEN AIR PRESSURE DROPS BELOW 45 POUNDS.	
A.P.B. DIRECTIONAL RELAYS		S	SR	2GS, 27OS, 1ES — 26GSR, 27OSR, 1ESR	
APPROACH RELAYS		P	AR	2LP - 2LAR (WHERE APPROACH SECTIONS ARE INDICATED INDEPENDENTLY, PREFIX SHALL BE THE SIGNAL NUMBER WHICH RELAY INDICATES APPROACH THERETO: 2LP, 214P - 2LAR, 214AR)	
CALLING-ON RELAYS		CR	COSR	2LCR, 8RCR, 12CR — 2LCOSR, 8RCOSR, 12COSR	
DIRECTION SELECTING RELAYS		DS	FR	34GDS, 36A-1DS - 34GFR, 36A-1FR (WHERE MORE THAN ONE RELAY IS REQUIRED IN A BLOCK, 34GDSA 34GDSB - 34GFRA, 34GFRB	
DRAGGING EQUIPMENT DETECTOR RELAYS	DETECTOR RELAY	DTR	DEDR	1DTR, 2DTER - 1DEDR, 2EDEDR	1, 2, 3 - TRACK NUMBERS E & W - DIRECTION WHERE PROVIDED IN BOTH DIRECTIONS.
	DETECTOR LINE RELAY	DTM	DEDPR	1DTM, 2DTWM - 1DEDPR, 2WDEDPR	
	RESTORE RELAY	DTMU	PBSR	1DTMU, 3DTMU, 1PBSR, 3PBSR	
HIGHWAY CROSSING SIGNALS AND AUTOMATIC SHORT ARM GATES	BELL CONTROL RELAY	VBR	XXR	1VBR, 2VBR - 1XXR, 2XXR	
	CROSSING SIGNAL CONTROL RELAY.	XR	XPR	1XR FOR ONE CROSSING - 2XR AND 3XR FOR SECOND AND THIRD CROSSINGS.	
	CUT-OUT RELAYS	COR	PBSR	1COR, 2COR - 1PBSR, 2PBSR	
	DIRECTIONAL (SLOW-RELEASE) RELAYS	EM, WM, NM, SM	EXSR, WXSR	2EM, 2WM - 2EXSR, 2WXSR (WHERE MORE THAN ONE CROSSING IS INVOLVED - 2EMA, 2WMA - 2EXSRA, 2WXSRA)	
	FLASHER RELAYS	LR	EOR	WHERE MORE THAN ONE CROSSING IS INVOLVED, LRA, LRB - EORA, EORB, ETC.	
	GATE CLEARING RELAY	GTNR	XGNR	1GTNR, 2GTNR - 1GNR, 2GNR	
	GATE DELAY RELAY	GTR	XGNRPR	1GTR, 2GTR - 1GNRPR, 2GNRPR	
	INTERLOCKING RELAYS	EM, WM	EXR WXR	1EM, 1EMA - 1EXR, 1EXRA (WHERE RELAY IS CONNECTED DIRECT TO TRACK IT SHALL TAKE DESIGNATION OF TRACK SECTION TO WHICH IT IS CONNECTED)	
	LINE CONTROL RELAYS	CLR	ETPR WTPR	1CLR, 1CLER (E INDICATES RELAY CONTROLS FOR EASTWARD MOVT. 1ETPR, 1WTPR (E & W - REPEATS SECTIONS EAST AND WEST	
INDICATION LIGHT RELAYS		ELR	KR	4RKELR, 7TELR, 9ELR - 4RKR, 7TKR, 9KR	

NOTE:
A.A.R. CIRCUIT NOMENCLATURE SHALL BE USED FOR ALL NEW WORK AND EXTENSIVE RENEWALS.
FOR COMPLETE A.A.R. CIRCUIT NOMENCLATURE SEE SHEETS 4 AND 5

REVISIONS

OCTOBER 3, 1949.
A.A.R. CIRCUIT NOMENCLATURE ADDED.
APPROVED: H. G. Salmon
SUPERSEDES APPROVED PLAN S-802 DATED 4-16-23.

SHEET 1 OF 5

S-802

THE PENNSYLVANIA RAILROAD
STANDARD
DESIGNATION OF INSTRUMENTS & APPARATUS INDICATED ON SIGNAL CIRCUIT PLANS

OFFICE OF CHIEF ENGINEER,
PHILA., PA., MAY 5, 1947.
APPROVED: R. C. Griffith — ASST. CHIEF ENGINEER, T.C.S.
APPROVED: J. Quincy — CHIEF ENGINEER

A.S.B.
H.D.H.

RELAYS		DESIGNATION P.R.R.	DESIGNATION A.A.R.	EXAMPLES & EXPLANATIONS
OVERLOAD RELAYS		OR		3-OR, 5-OR
POLE-CHANGING RELAYS		PCR		1PCR, 6RPCR, 8LPCR, 10PCR
POWER-OFF RELAYS		POR		POR.-(WHERE MORE THAN ONE RELAY IS REQUIRED: PORA, PORB.)
POWER-OFF REPEATING RELAYS		PORM	PORPR	PORM-(WHERE MORE THAN ONE RELAY IS REQUIRED: PORMA, PORMB - PORPRA, PORPRB
REPEATING RELAYS		M	PR	9TM, 23NM, 23RM - 9TPR, 23NLPR, 23RLPR 7TMA, 7TMB, 7TMC - 7TPR, 7TPPR, 7TPPPR
ROUTE LOCKING RELAYS		E W	ESR WSR	3E, 5W - 3ESR, 5WSR. (E AND W INDICATES DIRECTION, LIKEWISE NORTH AND SOUTH)
ROUTE SELECTING RELAYS		HM	BPR	2HM - 2BPR -- REPEATER OF TRACK SECTION BEYOND INTERLOCKING WITH NECESSARY SELECTION. MAY BE USED WHERE TWO OR MORE SIGNALED ROUTES ARE INVOLVED.
SIGNAL CONTROL RELAYS	HOME SIGNAL - APPROACH OR PERM.	H	HR	4RAH, 6LAH - 4RAHR, 6LAHR
	HOME SIGNAL - SLOW-APPROACH	HA	HAR	6LBHA - 6LBHAR WHERE SLOW-APPROACH OR RESTRICTING INDICATION IS PROVIDED BUT NOT BOTH, SUFFIX 'A' & 'B' MAY BE OMITTED.
	HOME SIGNAL - RESTRICTING	HB	HBR	6LBHB - 6LBHBR
	HOME SIGNAL - STOP & PROCEED	N	NR	4RBN, 6LBN - 4RBNR, 6LBNR
	HOME SIGNAL - CLEAR	J	DR	4RAJ, 4RBJ 4RADR, 4RBDR WHERE SEPARATE RELAY IS USED FOR EACH ARM
				4RJ - 4RDR WHERE ONE RELAY IS USED
	DISTANT AND APP.-MEDIUM AUTOMATIC SIGNALS OR CLEAR	J	DR	395J, 430-1J, 430-2J - 395DR, 430-1DR, 430-2DR
	POLARIZED APPROACH AND CLEAR CONTROL RELAYS	HJ	HDR	169HJ, 170-1HJ, 170-2HJ - 169HDR, 170-1HDR, 170-2HDR
SIGNAL LOCK RELAYS		KR	RGPR	4LKR - 2MRGPR (LINE REPEATING RELAYS)
SLOW ACTING RELAYS		SA	PR	169HJSA - 169HDPR 395TSA - 395TPR USE FOR BOTH SLOW-RELEASE AND SLOW PICKUP RELAYS, SYMBOL COVERING CHARACTERISTICS.
SMASHBOARD CONTROL RELAYS		SBNR		6SBNR - FOR NORMAL DRIVE (STOP)
		SBRR		6SBRR - FOR REVERSE DRIVE (CLEAR)
		SBR		6SBR - WHERE CLEAR DRIVE ONLY IS PROVIDED
SPECIAL RELAYS		T	Z	1T, 2T - WHERE USED FOR DESIGNATED TRACK.
		U		6U, 10RU - WHERE USED IN CONNECTION WITH SIGNAL LEVER Z - USE FOR ANY SPECIAL TERM (TO BE NOTED ON PLAN
SWITCH REPEATING RELAYS		SS	WPR	3SS - 3WPR DIRECT REPEATER OF SWITCH.
		SSA, SSB	WPRA, WPRB	3SSA, 3SSB - 3WPRA, 3WPRB MULTIPLE REPEATERS
		SSNM SSRM	NWPR RWPR	3SSNM - 3NWPR NEUTRAL REPEATERS (N = NORMAL 3SSRM - 3RWPR REPEATER, R = REVERSE REPEATER)
TIME ELEMENT RELAYS		TER		1TER, 4LTER, 6LTER (L = LONG TIME) 6STER (S = SHORT TIME)
TIME ELEMENT REPEATING RELAYS		TEM	TEPR	1TEM, 4LTEM - 1TEPR, 4LTEPR
TIME ELEMENT CHECK CONTACT REPEATING STICK RELAYS		TES	TESR	1TES, 4LTES - 1TESR, 4LTESR
TIME LOCKING STICK RELAYS		KM	MPSR	4RKM, 6LKM, 10KM - 4RMPSR, 6LMPSR, 10MPSR
TORPEDO PLACING MACHINE RELAYS	CONTROL RELAY	TPS		2TPS, 4TPS 2, 4 = TRACK NUMBERS
	FIRING INDICATION RELAY	TPNM		2TPNM, 4TPNM
	REVERSE MOVEMENT RELAY	E, W		2RE, 6LW E, W = DIRECTION
	SIGNAL RETAINING STICK RELAY	TPWS, TPES		2TPWS, 4TPES
TRACK RELAYS		TR		7TR, 395TR, 430-A1TR - TRACK RELAYS SHALL TAKE DESIGNATION OF TRACK CIRCUIT TO WHICH THEY ARE CONNECTED. (SEE PLAN S-801.)
TRACK INDICATING RELAYS		A	HSR	2RA, 6LA, 10A - 2RHSR, 6LHSR, 10HSR
STICK RELAY REPEATING TRACK RELAY		TS	TPSR	9TS, A17TS - 9TPSR, A17TPSR
TRAFFIC RELAYS		FR		8EFR, 8WFR, 14EFR, 14WFR
TRAIN ORDER SIGNAL CONTROL RELAYS		TOR		ATOR, BTOR
TWO-RATE CHARGE RELAYS		TRCR		TRCR - WHERE MORE THAN ONE RELAY IS REQUIRED - TRCRA, TRCRB

CODED TRACK CIRCUITS INSTRUMENTS & APPARATUS	DESIGNATION P.R.R.	DESIGNATION A.A.R.	EXAMPLES & EXPLANATIONS
ARC SUPPRESSOR	AS		1DTAS, 2DTAS
CODE CONTROL RELAY	V	VR	1V, 7TV, 9TVE, 9TVW.
CODE DETECTING RELAYS	H	HR	395H, 430-1H, 430-2H - 395HR, 430-1HR, 430-2HR
	CD	CDR	110LCD -
	SA	TPR	15A, 25A - CUT-SECTIONS
	BJ	BDR	395BJ, 430-1BJ, - 395BDR, 430-1BDR 120 CODE
	J AJ	DR ADR	157J, 430-1AJ, - 157DR, 430-1ADR 180 CODE
CODE DETECTING UNIT	CDU		1CDU, 2CDU
CODE FOLLOWING TRACK RELAY	TR		7TR, 395TR, 430-A1TR
CODE FOLLOWING TRACK REPEATING RELAY	F5A	TFPR	1F5A, 2F5A - FRONT CONTACT REPEATERS
	B5A	TBPR	1B5A, 2B5A - BACK CONTACT REPEATERS
CODE TRANSMITTER	CT		CTA, CTB, 75CT, 120CT, 180CT
CODE TRANSMITTER REPEATER	CTM	CTPR	1CTM, 2CTM
DECODING TRANSFORMER	DT		1DT, 2DT, 430-1DT
DECODING UNIT	DU		120DU, 180DU
FREQUENCY CONVERTER	FC		1FC, 117FC
IMPULSE RELAY	IR		395IR, 430-A1IR
IMPULSE TRANSFORMER	IT		395IT, 430-A1IT
LOCKOUT RELAY	LOR		395LOR, 430-A1LOR
RELAY - RETURN CODE CONTROLLED	AP	ATPR	395TAP
RESONANT TRANSFORMER RECTIFIER UNIT	RTR		4LRTR, 25RTR
REVERSIBLE CODED TRACK RELAY	TR		W1TR, E1TR, 5X1TR, NX1TR
STEADY ENERGY DETECTOR RELAY	TRAS		67TRAS, 78TRAS
TRACK RELAY - RETURN CODE	AR	ATR	1TAR, 395TAR
TRACK TRANSFORMER	TT		X1TT, 395TT
TRACK TRANSFORMER-PRIMARY CODE	TP		X1TP, 395TP
TUNED ALTERNATOR	TA		1TA, X1TA, 395TA

NOTE:
A.A.R. CIRCUIT NOMENCLATURE SHALL BE USED FOR ALL NEW WORK AND EXTENSIVE RENEWALS.
FOR COMPLETE A.A.R. CIRCUIT NOMENCLATURE SEE SHEETS 4 AND 5.

REVISIONS

OCTOBER 3, 1949.
A.A.R. CIRCUIT NOMENCLATURE ADDED.
APPROVED:
(SIGN) H. G. Salmonson

SUPERSEDES APPROVED PLAN S-802 DATED 4-16-23. DESIGNATIONS FOR CODED TRACK CIRCUITS ADDED.

SHEET 2 OF 5

S-802

THE PENNSYLVANIA RAILROAD
STANDARD

DESIGNATION OF INSTRUMENTS & APPARATUS INDICATED ON SIGNAL CIRCUIT PLANS

OFFICE OF CHIEF ENGINEER.
PHILA., PA., MAY 5, 1947.

APPROVED: H. C. Griffith
ASST. CHIEF ENGINEER, T-C-S.

APPROVED: W. Gemmill
CHIEF ENGINEER

G.S.B.
H.G.M.

C.T.C. AND ALL-RELAY INSTALLATIONS

INSTRUMENTS & APPARATUS		DESIGNATION P.R.R.	DESIGNATION A.A.R.	EXAMPLES & EXPLANATIONS
CARRIER CONTROL (100 CYCLE) RELAY FOR ELECTRIC SWITCH LOCKS		LWKR	WLR	3LWKR, 7LWKR - 3WLR, 7WLR
CODE RECEIVING OR LEVER REPEATING STICK RELAYS	SIGNALS	HS	HSR	2RHS, 2LHS, 110RHS, 110LHS - 2RHSR, 2LHSR
	BLOCK SIGNALS (PERM.)	PHS	PHSR	95RPHS, 97LPHS - 95RPHSR
	BLOCK SIGNALS (CLEAR)	CHS	CHSR	95RCHS, 97LCHS - 95RCHSR
	CALLING-ON SIGNALS	CR	COR	2CR, 110CR - 2COR
	D.E.D. RESTORE	DTMS	DEDSR	108DTMS, 140DTMS - 108DEDSR
	ELECTRIC SWITCH LOCKS	WKS	WLSR	89WKS, 121WKS - 89WLSR
	MAINTAINER'S CALL	MC	MCR	59MC - 59MCR
	SWITCHES	NWS, RWS	NWSR, RWSR	3NWS, 3RWS — 3NWSR, 3RWSR (N-NORMAL, R-REVERSE)
	TRAFFIC	FS	FSR	8EFS, 8WFS, 10NFS, 10SFS E, W, N, S = DIRECTION.
	TROLLEY SECTIONALIZING SW'S.	OS, CS		22-OS, 22-CS O = OPEN, C = CLOSED
DIRECTION SELECTING RELAYS		DS	FR	1EDS, 1WDS, 2EDS, 2WDS - 1EFR, 1WFR
DIRECTION STICK RELAYS		S	SR	82RS, 82LS - 82RSR
ROUTE CHECK NETWORK		HSM	HSPR	110RHSM, 110LHSM - 110RHSPR
SIGNAL INDICATION STICK RELAYS		KM	ASR	2RKM, 2LKM, 110RKM, 110LKM - 2RASR, 2LASR
SPECIAL STICK RELAYS		TS	TKSR	2TS, 26TS - 2TKSR
SPECIAL TRAFFIC CHECKING RELAYS		F, FS	FR, FSR	1TWF, 1TWFS, 2TEF 2TEFS - 1WFR, 1WFSR
SPECIAL REPEATING RELAY FOR ELEC. SW. LOCKS		WKS	WLSR	3WKS, 7WKS - 3WLSR, 7WLSR
SWITCH INDICATION LOCK RELAYS		KM	LR	105KM, 107KM - 105LR, 107LR
SWITCH (SS & WR) AGREEMENT RELAYS		NM, RM	NWCR, RWCR	3NM, 3NMA, 3NMB, 3RM, 3RMA, 3RMB - 3NWCR, 3RWCR
TIME ELEMENT CONTROL RELAYS		LRKM	ASPR	2LRKM, 26LRKM - 2ASPR, 26ASPR
TIME ELEMENT SELECTION RELAYS		S, ST	STR	112S, 112ST (ST = SHORT TIME) - 112STR
TIME ELEMENT RELAYS		TER, STER, LTER		26TER, 26STER (SHORT TIME), 26LTER (LONG TIME)
TRAFFIC INDICATION LOCK RELAYS		KM	FLR	110KM, 115KM - 110FLR, 115FLR
TROLLEY SECTIONALIZING SWITCH IND. RELAY		OK, CK		22-OK, 22-CK O = OPEN, C = CLOSED

C.T.C. MACHINE NETWORK

INSTRUMENTS & APPARATUS	DESIGNATION P.R.R.	DESIGNATION A.A.R.	EXAMPLES & EXPLANATIONS
D.E.D. INDICATING RELAYS	DTK	DEK	124DTK - 124DEK.
"L" SIGNAL CONTROL RELAYS	LG		142LG
"R" SIGNAL CONTROL RELAYS	RG		142RG
NORMAL SIGNAL CONTROL RELAYS	NG		142NG
"L" SIGNAL INDICATING RELAYS	LHK		142LHK
"R" SIGNAL INDICATING RELAYS	RHK		142RHK
SWITCH INDICATING RELAYS	WK		141NWK, 141RWK (N = NORMAL, R = REVERSE).
SWITCH LOCK CONTROL RELAYS	WLP		134WLP
SWITCH LOCK INDICATION RELAYS	K	WLK	141K - 141WLK
TRACK INDICATING RELAYS	TK		141TK, 134ETK, 134WTK
TRAFFIC CONTROL RELAYS	LP	FLP	134LP - 134FLP
TRAFFIC INDICATING RELAYS	FK		134EFK, 134WFK

NOTE:
A.A.R. CIRCUIT NOMENCLATURE SHALL BE USED FOR ALL NEW WORK AND EXTENSIVE RENEWALS.
FOR COMPLETE A.A.R. CIRCUIT NOMENCLATURE SEE SHEETS 4 AND 5.

REVISIONS

OCTOBER 3, 1949.
A.A.R. CIRCUIT NOMENCLATURE ADDED.
APPROVED:
H. G. Salmonson
H.G.H.

SHEET 3 OF 5

S-802

THE PENNSYLVANIA RAILROAD
STANDARD
DESIGNATION OF INSTRUMENTS & APPARATUS INDICATED ON SIGNAL CIRCUIT PLANS

OFFICE OF CHIEF ENGINEER,
PHILA., PA., MAY 5, 1947.

APPROVED:
P. K. Griffith
ASST. CHIEF ENGINEER, T.C.S.

APPROVED:
J. Thomas
CHIEF ENGINEER.

A.A.D.
W.D.M.

TABLE OF MEANING OF LETTERS
DESCRIPTIVE AND DESIGNATIVE TERMS.

A — APPROACH
B — BLOCK – BUTTON – POSITIVE ENERGY – BRIDGE – BACK
C — COMMON – CHANGER – COUNTER – CORRESPONDENCE – CIRCUIT – CONTROLLER – CODE – CHECKING CONTACTS – CHANGE
D — PROCEED INDICATION OF A SIGNAL – DETECTOR – DECODING – DRAGGING
E — EAST – EASTWARD – ELECTRIC LIGHT – ELEMENT – EQUIPMENT – ELECTRONIC
F — TRAFFIC – FRONT – FREQUENCY
G — GREEN – SIGNAL (OPERATING MECHANISM) – GROUND – GATE
H — HOME – APPROACH INDICATION OF A SIGNAL
J — SKATE – DUAL CONTROL
K — INDICATOR
L — LEFT – LOCK PREVENTING INITIAL MOVEMENT OF A LEVER FROM NORMAL OR REVERSE POSITION – LOCKING – LEVER – LIGHT – SPLIT BATTERY – LOCK VALVE – LOCK
M — LOCK PREVENTING FINAL OR INDICATING MOVEMENT OF A LEVER – MAGNETIC – MARKER – MANUAL
N — NORMAL – NORTH – NORTHWARD – NEGATIVE
O — ORDER – OPERATION – OFF – OVERLOAD – OUT – OVER
P — POLE – POWER – PURPLE – PUSH – REPEATING – PRIMARY
Q — LOCAL OR SECONDARY COIL (AS IN DOUBLE-ELEMENT RELAY OR MECHANISM)
R — RIGHT – RED – REVERSE – RELAY – POWER OPERATED CONTROLLER OR CONTACTOR – ROUTE – STOP INDICATION ON SIGNAL – RAIL
S — SOUTH – SOUTHWARD – STICK – STORAGE
T — TRACK – TIME – TRAIN – TELEPHONE – TRANSFORMER – TRANSMITTER
U — RETARDER – UNIT
V — TRAIN STOP (TRACK ELEMENT) – ELECTRO-PNEU. STOP VALVE
W — SWITCH (OPERATING MECHANISM) – WEST – WESTWARD – WHITE
X — CROSSING – INTERLOCKING – BELL – BUZZER – A.C.
Y — SLOT – YELLOW – HOLD CLEAR
Z — USE FOR ANY SPECIAL TERM (TO BE NOTED ON PLAN)

IN ORDER TO DISTINGUISH BETWEEN RIGHT AND LEFT POSITION OF THREE-POSITION LEVERS, USE R (RIGHT) OR L (LEFT) AFTER THE LEVER NUMBER, AS 10R, 10L.
WHEN ONE LEVER CONTROLS TWO OR MORE FUNCTIONS, USE LETTERS A, B, C. ETC., AFTER THE LEVER NUMBERS: FOR EXAMPLE, 10A, 10B, 10C, ETC.
IN CASE OF THREE-POSITION LEVERS CONTROLLING TWO OR MORE FUNCTIONS IN EACH POSITION, USE COMBINATIONS AS FOLLOWS: 10RA, 10LA, ETC.

EXAMPLES OF COMBINATIONS USED TO DESIGNATE WIRES AND OPERATED UNITS

ENERGY WIRES

(SUFFIX FIGURE SHOULD BE USED TO INDICATE VOLTAGES: FOR EXAMPLE, CX110 MEANING COMMON A.C. 110 VOLTS.)

C — COMMON D.C.
EC — COMMON EAST, MEANING D.C. FROM SYSTEM EAST, LIKEWISE NORTH, SOUTH AND WEST.
FC — COMMON TRAFFIC LOCKING
CX — COMMON A.C.
ENX — NEGATIVE ENERGY A.C. FROM POR FOR AN ELECTRIC LIGHT, OR EAST NEGATIVE A.C. ENERGY, LIKEWISE NORTH, SOUTH AND WEST.
NX — NEGATIVE A.C. ENERGY
BL — POSITIVE SIDE OF SPLIT BATTERY
NL — NEGATIVE SIDE OF SPLIT BATTERY.
CL — COMMON OF SPLIT BATTERY
N — NEGATIVE D.C. ENERGY
B — POSITIVE D.C. ENERGY
EB — POSITIVE ENERGY EAST, LIKEWISE NORTH, SOUTH AND WEST
BB — BATTERY, SECOND BATTERY
BBB — BATTERY, THIRD BATTERY
BX — POSITIVE A.C. ENERGY
EBX — POSITIVE ENERGY A.C. FROM POR FOR AN ELECTRIC LIGHT, OR EAST POSITIVE A.C. ENERGY, LIKEWISE NORTH, SOUTH AND WEST

OPERATED UNITS RELATING TO TRACK CIRCUITS

T — TRACK SECTION
TR — TRACK RELAY
TPR — RELAY REPEATING TRACK RELAY
TPPR — RELAY REPEATING TRACK REPEATING RELAY
TSR — TRACK STICK RELAY
TSPR — RELAY REPEATING TRACK STICK RELAY
TK — INDICATOR, INDICATING CONDITION OF A TRACK CIRCUIT
TRSR — STICK RELAY REPEATING TRACK RELAY
BPR — BLOCK REPEATER RELAY, RELAY REPEATING THE TRACK CIRCUITS IN A BLOCK
BK — BLOCK INDICATOR

WIRES RELATING TO TRACK CIRCUITS

TB — TRACK POSITIVE — POSITIVE ENERGY TO RAIL
TN — TRACK NEGATIVE – NEGATIVE ENERGY TO RAIL
RB — RELAY POSITIVE — WIRE FROM POSITIVE RAIL TO RELAY
RN — RELAY NEGATIVE — WIRE FROM NEGATIVE RAIL TO RELAY
TQ — POSITIVE CONTROL OF LOCAL COIL, DOUBLE ELEMENT A.C RELAY
WB — POSITIVE RAIL TO SWITCH CIRCUIT CONTROLLER
WN — NEGATIVE RAIL TO SWITCH CIRCUIT CONTROLLER

OPERATED UNITS RELATING TO SWITCHES

W — SWITCH OPERATING MECHANISM OR LOCK VALVE
WR — RELAY, CONTROLLER OR CONTACTOR CONTROLLING BOTH NORMAL AND REVERSE OPERATIONS OF A SWITCH OR AN ELECTRIC SWITCH LOCK.
WNR — RELAY, CONTROLLER OR CONTACTOR CONTROLLING THE NORMAL OPERATION OF A SWITCH OR AN ELECTRIC SWITCH LOCK
WRR — RELAY, CONTROLLER OR CONTACTOR CONTROLLING THE REVERSE OPERATION OF A SWITCH OR AN ELECTRIC SWITCH LOCK
WRPR — RELAY REPEATING WR
WNRPR — RELAY REPEATING WNR OR NORMAL POSITION OF WR
WRRPR — RELAY REPEATING WRR OR REVERSE POSITION OF WR
WPR — RELAY REPEATING POSITION OF SWITCH
NWPR — RELAY REPEATING NORMAL POSITION OF SWITCH OR NORMAL POSITION OF WPR
RWPR — RELAY REPEATING REVERSE POSITION OF SWITCH OR REVERSE POSITION OF WPR
WK — INDICATOR INDICATING THE POSITIONS OF A SWITCH
WL — SWITCH LOCK OPERATING MECHANISM ON A SWITCH
NWLPR — RELAY REPEATING NORMAL POSITION OF SWITCH LOCK
NJPR — RELAY REPEATING NORMAL POSITION OF DUAL-CONTROL LEVER
RJPR — RELAY REPEATING REVERSE POSITION OF DUAL-CONTROL LEVER
NWK — INDICATOR INDICATING THE NORMAL POSITION OF A SWITCH
RWK — INDICATOR INDICATING THE REVERSE POSITION OF A SWITCH
WAK — INDICATOR INDICATING THE CONDITION APPROACHING A SWITCH
RWLPR — RELAY REPEATING REVERSE POSITION OF A SWITCH LOCK
WCR — SWITCH CORRESPONDENCE RELAY

OPERATING UNITS RELATING TO SIGNALS

HR — RELAY CONTROLLING APPROACH INDICATION OF A THREE-POSITION SIGNAL OR THE PROCEED INDICATION OF A TWO-POSITION SIGNAL IN ONE-ARM SIGNALING
DR — RELAY CONTROLLING PROCEED INDICATION OF A SIGNAL
HDR — RELAY CONTROLLING APPROACH AND PROCEED INDICATION OF A SIGNAL
HPR — RELAY REPEATING HR OR APPROACH INDICATION POSITION OF HDR
HSR — HOME STICK RELAY CONTROLLING THE APPROACH INDICATION OF A SIGNAL
DPR — RELAY REPEATING DR OR PROCEED INDICATION POSITION OF HDR
RGPR — RELAY REPEATING SIGNAL MECHANISM AT STOP
HGPR — RELAY REPEATING SIGNAL MECHANISM AT APPROACH
RHGPR — RELAY REPEATING SIGNAL MECHANISM AT APPROACH AND STOP
DGPR — RELAY REPEATING SIGNAL MECHANISM AT PROCEED
RGK — INDICATOR INDICATING SIGNAL MECHANISM AT STOP
HGK — INDICATOR INDICATING SIGNAL MECHANISM AT APPROACH
DGK — INDICATOR INDICATING SIGNAL MECHANISM AT PROCEED
ETOHR — EAST TRAIN ORDER HR, LIKEWISE WEST, NORTH AND SOUTH
ETOHDR — EAST TRAIN ORDER HDR, LIKEWISE WEST, NORTH AND SOUTH
ETOPHR — EAST TRAIN ORDER REPEATER HR, LIKEWISE WEST, NORTH AND SOUTH
ETOPDR — EAST TRAIN ORDER REPEATER DR, LIKEWISE WEST, NORTH AND SOUTH
HDGPR — RELAY REPEATING SIGNAL MECHANISM IN THE APPROACH AND PROCEED POSITION
HDGK — INDICATOR INDICATING SIGNAL MECHANISM IN THE APPROACH AND PROCEED POSITION
HY — HOLD CLEAR OR RETAINING MECHANISM OF THE APPROACH INDICATION OF A SIGNAL
DY — HOLD CLEAR OR RETAINING MECHANISM OF THE PROCEED INDICATION OF A SIGNAL
HG — APPROACH INDICATION OPERATING MECHANISM OF A SIGNAL
DG — PROCEED INDICATION OPERATING MECHANISM OF A SIGNAL
RG — STOP INDICATION OPERATING MECHANISM OF A SIGNAL

CIRCUIT NOMENCLATURE IN ACCORDANCE WITH PART 33, A.A.R. SIGNAL SECTION MANUAL, COMPLETE TO 1949.

FOR ALL NEW WORK AND EXTENSIVE RENEWALS

REVISIONS

SHEET 4 OF 5

S-802

THE PENNSYLVANIA RAILROAD
STANDARD

DESIGNATION OF INSTRUMENTS & APPARATUS INDICATED ON SIGNAL CIRCUIT PLANS

OFFICE OF CHIEF ENGINEER,
PHILA., PA., OCTOBER 3, 1949.

APPROVED: H. G. Salmonson
ASST. CHIEF ENGINEER-SIGNALS

APPROVED: J. Hamilton
CHIEF ENGINEER

STICK, TRAFFIC AND DIRECTIONAL OPERATED UNITS

SR — STICK RELAY
ESR — EAST STICK RELAY, LIKEWISE NORTH, SOUTH AND WEST
LSR — LOCKING STICK RELAY
EASR — EAST APPROACH STICK RELAY, LIKEWISE NORTH, SOUTH AND WEST
ASR — APPROACH STICK RELAY
FL — TRAFFIC LOCK PREVENTING INITIAL MOVEMENT OF A TRAFFIC LEVER FROM NORMAL OR REVERSE
FLM — TRAFFIC LOCK PREVENTING INITIAL MOVEMENT OF A TRAFFIC LEVER FROM NORMAL OR REVERSE AND ALSO PREVENTING FINAL OR INDICATION MOVEMENT OF SAME LEVER
FR — TRAFFIC RELAY
FLR — TRAFFIC LOCK RELAY CONTROLLING FL
FLMR — TRAFFIC LOCK RELAY CONTROLLING FLM
FLK — TRAFFIC LOCK INDICATOR
FSR — TRAFFIC STICK RELAY
EFSR — EAST TRAFFIC STICK RELAY, LIKEWISE NORTH, SOUTH AND WEST

OPERATED UNITS RELATING TO INDICATORS, LOCKS, INDICATION MAGNETS, AND RELAYS USED FOR LOCKING PURPOSES

M — LOCK PREVENTING THE FINAL MOVEMENT OF A LEVER
L — LOCK PREVENTING THE INITIAL MOVEMENT OF A CONTROLLED FUNCTION OR LEVER
NK — NORMAL INDICATOR INDICATING NORMAL POSITION OF A UNIT
RK — REVERSE INDICATOR INDICATING REVERSE POSITION OF A UNIT
TER — TIME ELEMENT RELAY
NM — LOCK PREVENTING THE FINAL MOVEMENT OF A LEVER TO THE NORMAL POSITION
RM — LOCK PREVENTING THE FINAL MOVEMENT OF A LEVER TO THE REVERSE POSITION
NL — LOCK PREVENTING THE MOVEMENT OF A LEVER OR A CONTROLLED FUNCTION FROM ITS NORMAL POSITION
RL — LOCK PREVENTING THE MOVEMENT OF A LEVER OR A CONTROLLED FUNCTION FROM ITS REVERSE POSITION
LR — RELAY CONTROLLING L LOCK
LPR — REPEATER OF L LOCK RELAY
MR — RELAY CONTROLLING M LOCK
MPR — REPEATER OF M LOCK RELAY
TE — TIME ELEMENT
TESR — TIME ELEMENT STICK RELAY
LK — LOCK INDICATOR REPEATING ELECTRIC LOCKING
TEPR — RELAY REPEATING ENERGIZED POSITION OF TE
TECPR — RELAY REPEATING CHECKING CONTACT OF TE

OPERATED UNITS RELATING TO HIGHWAY CROSSING SIGNALS

XX — CROSSING BELL
EXR — EASTWARD INTERLOCKING OR CROSSING RELAY, LIKEWISE NORTH, SOUTH AND WEST
XG — WIG-WAG MECHANISM — CROSSING GATE MECHANISM
XY — SLOT FOR WIG-WAG MECHANISM — CROSSING GATE MECHANISM
EOR — ELECTRIC LIGHT OPERATING RELAY (FLASHER RELAY)
XSR — DIRECTIONAL RELAY TO HOLD CROSSING SIGNAL CLEAR AS TRAIN RECEDES FROM CROSSING

OPERATED UNITS RELATING TO APPROACH AND ANNUNCIATING OF TRAINS

AX — ANNUNCIATOR INDICATING APPROACH TRAFFIC
EAX — EASTWARD ANNUNCIATOR INDICATING APPROACH OF EASTWARD TRAFFIC, LIKEWISE NORTH, SOUTH AND WEST
AER — RELAY USED FOR APPROACH LIGHTING

MISCELLANEOUS OPERATED UNITS

AK — APPROACH INDICATOR
AR — APPROACH RELAY
PCR — POLE CHANGING RELAY
NLPR — RELAY REPEATING THE NORMAL POSITION OF A LEVER
RLPR — RELAY REPEATING THE REVERSE POSITION OF A LEVER
E — ELECTRIC LIGHT
TO — TRAIN ORDER
WTO — WEST TRAIN ORDER SIGNAL GOVERNING WESTWARD TRAFFIC, LIKEWISE NORTH, SOUTH AND WEST
RR — ROUTE RELAY
VR — TRAIN STOP RELAY
VSR — TRAIN STOP STICK RELAY
VPR — TRAIN STOP REPEATER RELAY
VY — TRAIN STOP RETAINING MECHANISM
XR — INTERLOCKING RELAY
TOR — TRAIN ORDER RELAY
POR — POWER OFF RELAY
LOR — LIGHT OUT RELAY
ME — MARKER LIGHT
OR — OVERLOAD RELAY
GDR — GROUND DETECTOR RELAY
CT — CODE TRANSMITTER
DU — DECODING UNIT
RLNPR — RAIL LOCK NORMAL REPEATING RELAY
RLRPR — RAIL LOCK REVERSE REPEATING RELAY
DEDR — DRAGGING EQUIPMENT DETECTOR
FCOR — FREQUENCY CHANGE OVER RELAY

WIRES RELATING TO RELAYS ENDING WITH DESIGNATION SHOWN BELOW MAY BE DESIGNATED AS INDICATED

WIRE	RELAY
BP	BPR
D	DR
H	HR
HD	HDR
P	PR
S	SR
TE	TER
WC	WCR

CIRCUIT NOMENCLATURE IN ACCORDANCE WITH PART 33, A.A.R. SIGNAL SECTION MANUAL, COMPLETE TO 1949.

FOR ALL NEW WORK AND EXTENSIVE RENEWALS

REVISIONS

SHEET 5 OF 5

S-802

THE PENNSYLVANIA RAILROAD
STANDARD

DESIGNATION OF INSTRUMENTS & APPARATUS INDICATED ON SIGNAL CIRCUIT PLANS

OFFICE OF CHIEF ENGINEER,
PHILA., PA., OCTOBER 3, 1949.

APPROVED: H. G. Salmonson
ASST. CHIEF ENGINEER-SIGNALS

APPROVED: J. Barnett
CHIEF ENGINEER

XOX

JPH.

NOTES:-

1. RAIL BONDS AND CONNECTORS FOR TRACK CIRCUITS AND SWITCHES SHALL BE IN ACCORDANCE WITH P.R.R. STANDARD PLANS, BASIC NOS. S-179, S-180, S-182 AND S-184, FOR STEAM AND A.C. ELECTRIFIED TERRITORY; AND IN ACCORDANCE WITH CHIEF OF MOTIVE POWER PLANS FOR D.C. ELECTRIFIED TERRITORY. (SEE LIST ON THIS SHEET FOR DETAIL REFERENCES.)

2. THE POLARITY OF TRACK CIRCUIT CONNECTIONS ON CIRCUIT PLANS SHALL BE INDICATED.

3. INSULATING JOINTS, TRACK CIRCUIT ON BOTH SIDES.

4. INSULATING JOINTS, TRACK CIRCUIT ON ONE SIDE ONLY.

5. ----- TRACK CIRCUIT WIRE.

6. INSULATING JOINTS IN TURNOUTS, CROSSOVERS, MOVABLE POINT CROSSINGS AND DOUBLE SLIP CROSSINGS, MARKED ✱ OR ◉, SHALL NOT BE STAGGERED MORE THAN FIVE FEET. AT OTHER LOCATIONS THEY SHALL BE IN ACCORDANCE WITH CURRENT ISSUE OF C.E. 78.

7. INSULATING JOINTS BETWEEN FROGS IN CROSSOVERS, MARKED ◉, MAY BE LOCATED AT HEEL END OF FROG WHERE DESIGN OF FROG IS SUCH THAT SINGLE RAIL HEEL JOINTS ARE PROVIDED FOR. THE MINIMUM LENGTH OF RAIL USED SHALL CONFORM TO THAT PRESCRIBED BY THE CURRENT ISSUE OF C.E. 78 EXCEPT SHORTER RAILS OF MINIMUM LENGTH GIVEN IN FOLLOWING TABLE MAY BE LOCATED IN THE CROSSOVER AND CONNECTED TO HEEL OF FROG TO AVOID STAGGERING THE INSULATING JOINTS AT THE CENTER OF THE CROSSOVER MORE THAN FIVE FEET:

CROSSOVER	MINIMUM LENGTH OF RAIL 100 & 130-LB.	131-LB. & HEAVIER
NO. 8	7'-0"	11'-0"
NO. 10	8'-0"	11'-0"
NO. 15	11'-0"	—

8. INSULATING JOINTS MARKED ✱ SHALL BE LOCATED AS PROVIDED FOR IN CURRENT ISSUE OF C.E. 78, APPENDIX-PLANS OF LEAD RAILS.

9. INSULATING JOINTS MARKED ✱-15 (ARROW AND NUMBER INDICATING THE SWITCH FOR WHICH FOULING IS PROVIDED) ARE FOR FOULING PROTECTION.

10. INSTRUCTIONS FOR LOCATING INSULATING RAIL JOINTS FOR FOULING PROTECTION:-
INSULATING RAIL JOINTS FOR FOULING PROTECTION SHALL BE LOCATED BY DETERMINING THE POINT WHERE THE DISTANCE BETWEEN TRACKS IS THAT OF THE ESTABLISHED INTER-TRACK SPACING. WHERE TRACKS DIVERGE BACK OF THAT POINT, THE JOINTS SHALL BE LOCATED NOT LESS THAN TEN FEET BACK OF SAID POINT TO PROVIDE FOR THE MAXIMUM OVERHANG OF EQUIPMENT BEYOND THE CONTACT POINT OF THE WHEELS; OR, WHERE TRACKS ARE PARALLEL AT THAT POINT, THE JOINTS SHALL BE LOCATED AT OR BACK OF SAID POINT; TO ESTABLISH THE CLEARANCE POINT.
IN GENERAL, INSULATING RAIL JOINTS FOR FOULING PROTECTION SHALL BE SO LOCATED AS TO AFFORD THE SAME CLEARANCE BETWEEN EQUIPMENT ON THE CONVERGING TRACKS AS IS PROVIDED ON PARALLEL TRACKS WITH THE ESTABLISHED INTER-TRACK SPACING.

REFERENCES FOR DETAIL BONDING

TERRITORY	S-803 SHEET NO. INTER-LOCKED	S-803 SHEET NO. NON-INTER-LOCKED	TRACK CIRCUIT CONNECTIONS	TRACK BONDS RAIL HEAD	TRACK BONDS LONG BOND	SWITCH POINT INTER-LOCKED	SWITCH POINT NON-INTER-LOCKED	FROG INTER-LOCKED	FROG NON-INTER-LOCKED	FOULING CONNECTION INTER-LOCKED	FOULING CONNECTION NON-INTER-LOCKED	INTERLOCKED SERIES TRACK CIRCUIT CONN.	INTERLOCKED DOUBLE SLIP SWITCH	NON-INTERLOCKED SHUNT CIRCUIT SWITCH POINT	NON-INTERLOCKED SHUNT CIRCUIT CLEARANCE POINT	NON-INTERLOCKED SHUNT CIRCUIT M.P.W. PLAN 73930-A
STEAM ROAD																
NON-CAB SIGNAL	2	4	S-184	S-180	S-179	S-182, SH. 2, FIG. J(A)	S-182, SH. 1, FIG. E	S-182, SH. 2, FIG. I	S-182, SH. 1, FIG. D	S-182, SH. 2, FIG. H	S-182, SH. 1, FIG. C	S-182, SH. 2, FIG. K	S-182, SH. 2, FIG. P	S-182, SH. 1, FIG. A		S-182, SH. 1, FIG. G
CAB SIGNAL	3	5	S-184	S-180	S-179	S-182, SH. 2, FIGS. J(A), J(B)	S-182, SH. 1, FIG. E	S-182, SH. 2, FIG. I	S-182, SH. 1, FIG. D	S-182, SH. 2, FIGS. H, L, M, N, O	S-182, SH. 1, FIG. C		S-182, SH. 2, FIG. P	S-182, SH. 1, FIG. A	S-182, SH. 1, FIG. B OR FIG. F	S-182, SH. 1, FIG. G
A.C. ELECTRIFIED																
NON-CAB SIGNAL	2	4	S-184	S-180	S-179	S-182, SH. 2, FIG. J(A)	S-182, SH. 1, FIG. E	S-182, SH. 2, FIG. I	S-182, SH. 1, FIG. D	S-182, SH. 2, FIG. H	S-182, SH. 1, FIG. C	S-182, SH. 2, FIG. K	S-182, SH. 2, FIG. P	S-182, SH. 1, FIG. A		S-182, SH. 1, FIG. G
CAB SIGNAL	3	5	S-184	S-180	S-179	S-182, SH. 2, FIGS. J(A), J(B)	S-182, SH. 1, FIG. E	S-182, SH. 2, FIG. I	S-182, SH. 1, FIG. D	S-182, SH. 2, FIGS. H, L, M, N, O	S-182, SH. 1, FIG. C		S-182, SH. 2, FIG. P	S-182, SH. 1, FIG. A	S-182, SH. 1, FIG. B OR FIG. F	S-182, SH. 1, FIG. G
D.C. ELECTRIFIED																
NON-CAB SIGNAL △	2	4	S-184	F89011		F407399	F407399	F407399	F407399	F407399	F407399	F407399	F407399	F407399		F407399
CAB-SIGNAL △	3	5	S-184	F89011		F407399	F407399	F407399	F407399	F407399	F407399		F407399	F407399	F407399	F407399

△ = FOR BONDING AND INSULATION OF SWITCHES IN D.C. ELECTRIFIED TERRITORY CHIEF OF MOTIVE POWER PLAN REFERENCES ARE GIVEN. REQUISITES AS SHOWN ON PLAN S-803, AND APPLICATIONS AS SHOWN ON PLAN S-182, SHOULD BE FOLLOWED.

REVISIONS

SUPERSEDES S-803, SH. 1, DATED 5-15-38 AND C OF M.P. PLAN ET-7930, DATED 4-11-38.

GENERAL NOTES AND DETAIL REFERENCES

SHEET 1 OF 5

S-803

THE PENNSYLVANIA RAILROAD
STANDARD
BONDING AND INSULATION OF SWITCHES

OFFICE OF CHIEF ENGINEER,
PHILA., PA., DEC. 29, 1948.

APPROVED: H. R. Griffith
ASST. CHIEF ENGINEER, T.-C.-S.

APPROVED: G. Rennie
CHIEF ENGINEER

K.C.H.
4-5-6.

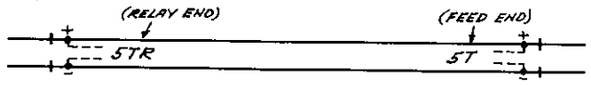

FEED AND RELAY LEADS FOR TRACK CIRCUITS
FIGURE 2A

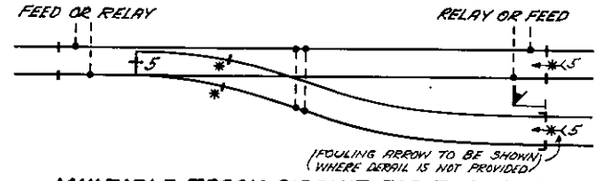

MULTIPLE TRACK CIRCUIT FOR TURNOUT
FIGURE 2B

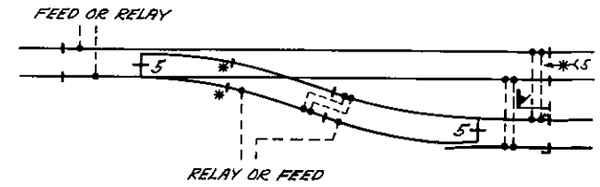

SERIES TRACK CIRCUIT FOR TURNOUT
FIGURE 2C

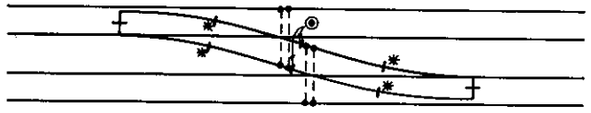

CROSSOVER
FIGURE 2D

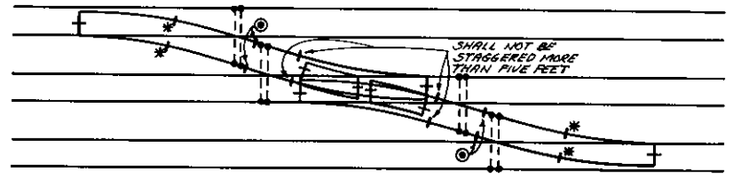

DOUBLE SLIP CROSSING
FIGURE 2E

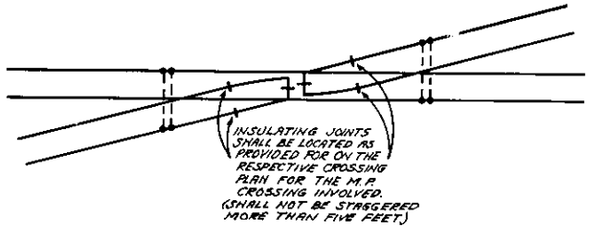

MOVABLE POINT CROSSING
FIGURE 2F

NOTES:-

1. FOR GENERAL NOTES AND DETAIL REFERENCES SEE SHEET NO. 1.
   ◉ = SEE SHEET NO. 1, NOTES 6 & 7.
   ✱ = SEE SHEET NO. 1, NOTES 6 & 8.

2. FROGS SHALL BE BONDED IN ACCORDANCE WITH PLAN S-182, SH. 2, FIG. I.

3. SWITCH POINTS SHALL BE BONDED IN ACCORDANCE WITH PLAN S-182, SH. 2, FIG. J USING J(A) RAIL BOND LOCATION.

INTERLOCKED SWITCHES

STERM ROAD
ELECTRIFIED TERRITORY
NON-CAB SIGNAL TERRITORY
OR WHERE
NO CODE OR CAB SIGNAL
PROTECTION IS REQUIRED
OVER SWITCHES IN CAB
SIGNAL TERRITORY

REVISIONS

SUPERSEDES S-803, SH. 2, DATED 5-13-27.

SHEET 2 OF 5

S-803

THE PENNSYLVANIA RAILROAD
STANDARD
BONDING AND INSULATION OF SWITCHES

OFFICE OF CHIEF ENGINEER,
PHILA., PA., DEC. 29, 1948.
APPROVED: H.C. Griffith
ASST. CHIEF ENGINEER, T.-C.-S.
APPROVED: S. Prescott
CHIEF ENGINEER

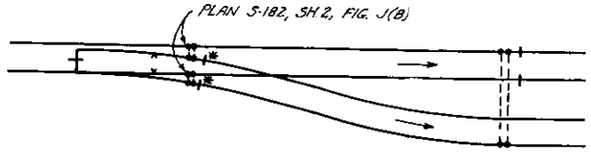

TURNOUT - MEDIUM SPEED FACING
WITH INTERVENING TRACK CIRCUIT BETWEEN TURNOUT AND REVERSE SIGNAL ON EITHER TRACK.

FIGURE 3A

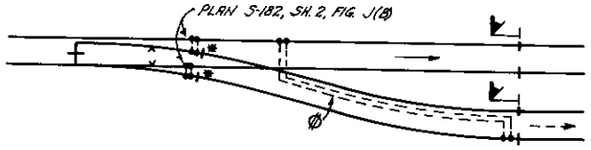

TURNOUT - MEDIUM SPEED FACING
WITH NO INTERVENING TRACK CIRCUIT BETWEEN TURNOUT AND REVERSE SIGNAL.

TURNOUT - MAIN TRACK AND SIDE TRACK
FOR OVERRUN PROTECTION WHERE DERAIL IS NOT PROVIDED ON SIDE TRACK. (SEE PLAN S-881.)

FIGURE 3B

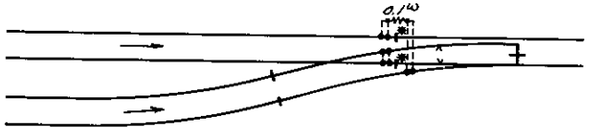

TURNOUT - MEDIUM SPEED TRAILING
INTERVENING TRACK CIRCUIT BETWEEN SIGNAL AND TURNOUT SHALL BE PROVIDED ON EITHER TRACK FOR OVERRUN PROTECTION. (SEE PLAN S-881.)
STEAM ROAD ONLY

FIGURE 3C

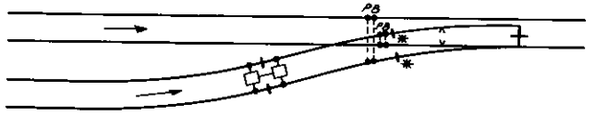

TURNOUT - MEDIUM SPEED TRAILING
INTERVENING TRACK CIRCUIT BETWEEN SIGNAL AND TURNOUT SHALL BE PROVIDED ON EITHER TRACK FOR OVERRUN PROTECTION. (SEE PLAN S-881.)
ELECTRIFIED TERRITORY ONLY

FIGURE 3D

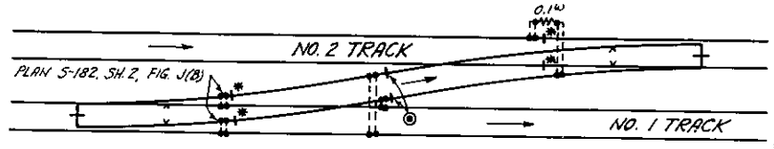

CROSSOVER - MEDIUM SPEED IN ONE DIRECTION
WITH NO INTERVENING TRACK CIRCUIT BETWEEN HOME SIGNAL AND CROSSOVER ON NO. 2 TRACK.
STEAM ROAD ONLY

FIGURE 3E

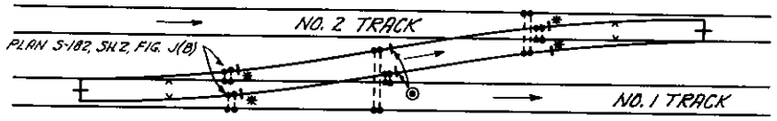

CROSSOVER - MEDIUM SPEED IN ONE DIRECTION
STEAM ROAD - EXCEPT AS SPECIFIED IN FIG. 3E
ELECTRIFIED TERRITORY

FIGURE 3F

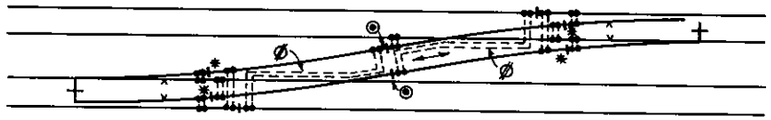

CROSSOVER - MEDIUM SPEED IN BOTH DIRECTIONS

FIGURE 3G

NOTES:-

1. FOR GENERAL NOTES AND DETAIL REFERENCES SEE SHEET NO. 1.
   ◉ = SEE SHEET NO. 1, NOTES 6 & 7.
   ✱ = SEE SHEET NO. 1, NOTES 6 & 8.
2. BONDING AND INSULATION OF TURNOUTS AND CROSSOVERS OVER WHICH RESTRICTING CAB SIGNAL INDICATIONS ONLY ARE DISPLAYED SHALL BE IN ACCORDANCE WITH SHEET NO. 2, EXCEPT AS SPECIFIED IN FIG. 3B.
3. FROGS SHALL BE BONDED IN ACCORDANCE WITH PLAN S-182, SH. 2, FIG. I.
4. SWITCH POINTS SHALL BE BONDED IN ACCORDANCE WITH PLAN S-182, SH. 2, FIG. J, USING J(A) RAIL BOND LOCATION EXCEPT WHERE J(B) IS SPECIFIED BY NOTE.
5. BONDS MARKED Ø SHALL BE LOCATED INSIDE AND ADJACENT TO RAIL AS SHOWN.
6. ⟶ = DIRECTION OF TRAFFIC FOR WHICH CODE IS GIVEN.
7. ⌃ = HEEL OF SWITCH.

INTERLOCKED SWITCHES

STEAM ROAD
ELECTRIFIED TERRITORY
CAB SIGNAL TERRITORY

REVISIONS

SUPERSEDES S-803, SH. 6, DATED 5-15-38, AND SH. 7, DATED 1-11-29.

SHEET 3 OF 5

S-803

THE PENNSYLVANIA RAILROAD
STANDARD
BONDING AND INSULATION OF SWITCHES

OFFICE OF CHIEF ENGINEER,
PHILA., PA., DEC. 29, 1948.
APPROVED: ASST. CHIEF ENGINEER, T-C-S.
APPROVED: CHIEF ENGINEER

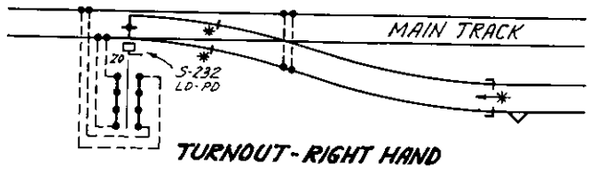

TURNOUT - RIGHT HAND

FIGURE 4A

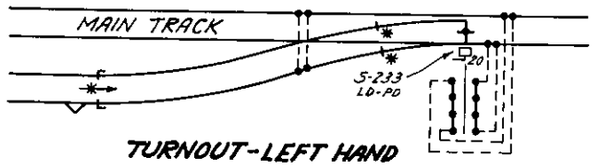

TURNOUT - LEFT HAND

FIGURE 4B

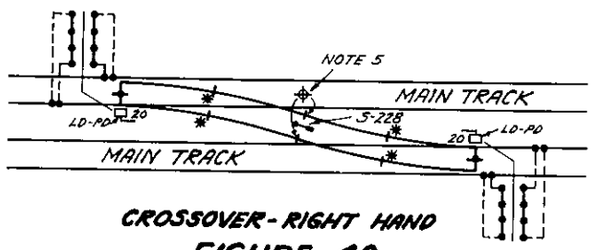

CROSSOVER - RIGHT HAND

FIGURE 4C

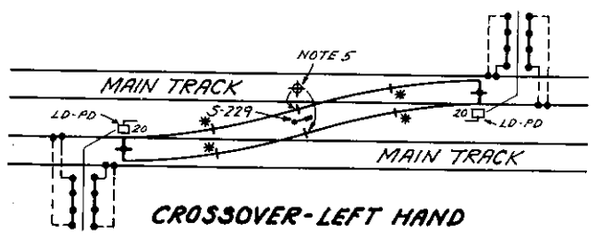

CROSSOVER - LEFT HAND

FIGURE 4D

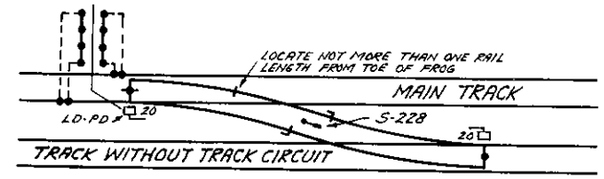

CROSSOVER - RIGHT HAND

BETWEEN MAIN TRACK AND SIDE TRACK
(SEE FIGURE 4H)

FIGURE 4E

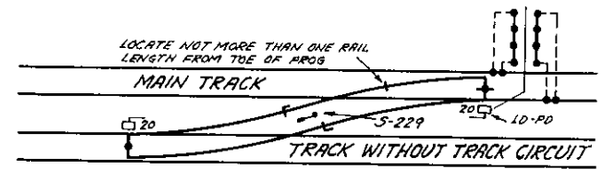

CROSSOVER - LEFT HAND

BETWEEN MAIN TRACK AND SIDE TRACK
(SEE FIGURE 4H)

FIGURE 4F

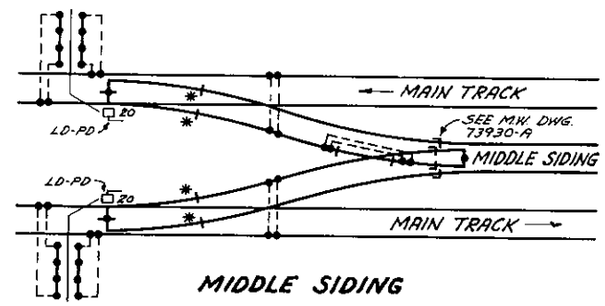

MIDDLE SIDING

FIGURE 4G

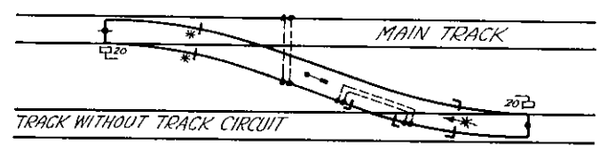

CROSSOVER

FOULING CIRCUIT TO BE PROVIDED BETWEEN MAIN TRACK AND SIDE TRACK WHERE DISTANCE BETWEEN FROGS IS EXCESSIVE. SHUNT CIRCUITS AS SHOWN IN FIGURES 4E, 4F, 5D OR 5H SHALL BE PROVIDED AS CONDITIONS REQUIRE.

FIGURE 4H

NOTES:-

1. FOR GENERAL NOTES AND DETAIL REFERENCES SEE SHEET NO. 1.
   ✱ = SEE SHEET NO. 1, NOTES 6 & 7.
2. FROGS SHALL BE BONDED IN ACCORDANCE WITH PLAN S-182, SH. 1, FIG. D.
3. SWITCH POINTS SHALL BE BONDED IN ACCORDANCE WITH PLAN S-182, SH. 1, FIG. E.
4. ARRANGEMENT FOR LOCKING OF TURNOUTS AND CROSSOVERS SHALL BE IN ACCORDANCE WITH STD. PLAN BASIC NOS. S-228, S-229, S-232 & S-233 AS INDICATED.
5. INSULATING JOINTS MARKED ⊕ IN CENTER OF CROSSOVER BETWEEN MAIN TRACKS, FIGS. 4C & 4D, SHALL BE INSTALLED IN ELECTRIFIED TERRITORY ONLY. FOULING WIRES SHALL NOT BE USED.
6. IN A.C. AND D.C. ELECTRIFIED TERRITORY POWER BONDING SHALL BE IN ACCORDANCE WITH REFERENCES SHOWN IN TABLE ON SHEET NO. 1; T20 HEAVY DUTY CIRCUIT CONTROLLERS SHALL BE PROVIDED, AND SHUNT CIRCUITS ARRANGED AS FOLLOWS:-

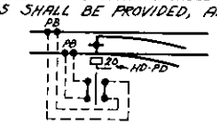

NON-INTERLOCKED SWITCHES

NON-CAB SIGNAL TERRITORY
STEAM ROAD
FOR A.C. AND D.C. ELECTRIFIED TERRITORY. (SEE NOTE 6.)

REVISIONS

SUPERSEDES S-803, SHS. 3 & 4, DATED 5-13-27.

SHEET 4 OF 5

S-803

THE PENNSYLVANIA RAILROAD
STANDARD
BONDING AND INSULATION OF SWITCHES

OFFICE OF CHIEF ENGINEER,
PHILA., PA., DEC. 29, 1948.

APPROVED: H. C. Griffith
ASST. CHIEF ENGINEER, T.-C.-S.

APPROVED: [illegible]
CHIEF ENGINEER

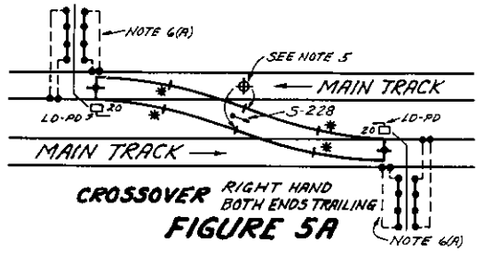

CROSSOVER RIGHT HAND BOTH ENDS TRAILING

FIGURE 5A

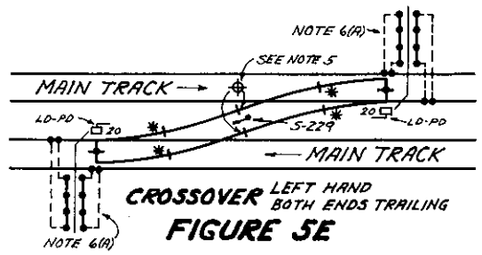

CROSSOVER LEFT HAND BOTH ENDS TRAILING

FIGURE 5E

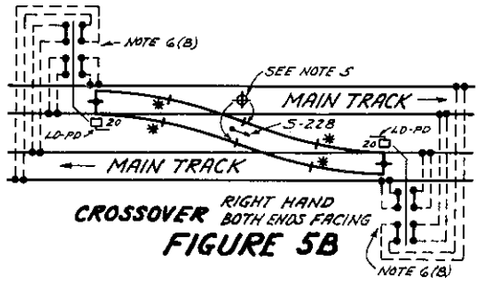

CROSSOVER RIGHT HAND BOTH ENDS FACING

FIGURE 5B

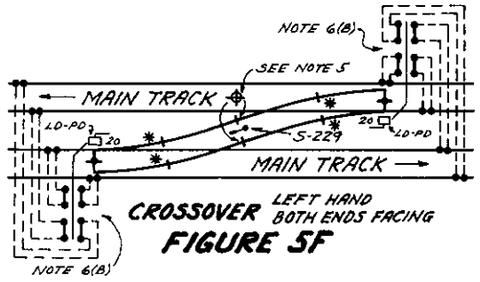

CROSSOVER LEFT HAND BOTH ENDS FACING

FIGURE 5F

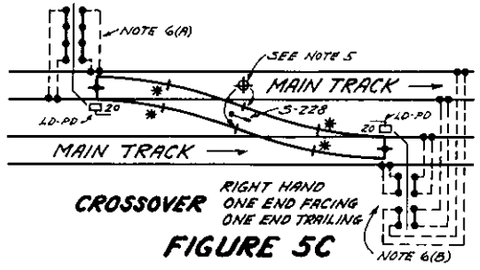

CROSSOVER RIGHT HAND ONE END FACING ONE END TRAILING

FIGURE 5C

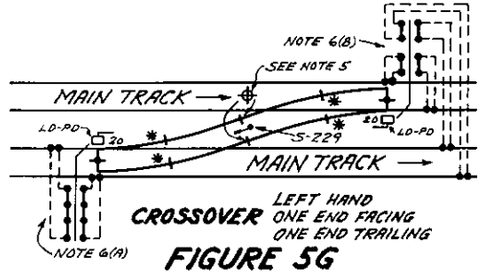

CROSSOVER LEFT HAND ONE END FACING ONE END TRAILING

FIGURE 5G

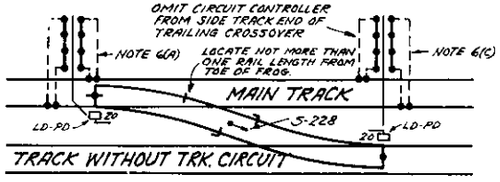

CROSSOVER RIGHT HAND TRAILING OR FACING

(SEE FIGURE 4H)

FIGURE 5D

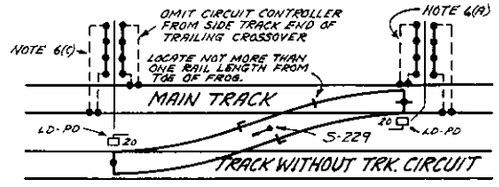

CROSSOVER LEFT HAND TRAILING OR FACING

(SEE FIGURE 4H)

FIGURE 5H

NOTES:-

1. FOR GENERAL NOTES AND DETAIL REFERENCES SEE SHEET NO. 1.
   ✱ = SEE SHEET NO. 1, NOTES 6 & 7.

2. FROGS SHALL BE BONDED IN ACCORDANCE WITH PLAN S-182, SH. 1, FIG. D.

3. SWITCH POINTS SHALL BE BONDED IN ACCORDANCE WITH PLAN S-182, SH. 1, FIG. E.

4. ARRANGEMENT FOR LOCKING OF TURNOUTS AND CROSSOVERS SHALL BE IN ACCORDANCE WITH STD. PLAN BASIC NOS. S-228, S-229, S-232 & S-233 AS INDICATED.

5. INSULATING JOINTS MARKED ✚ IN CENTER OF CROSSOVER BETWEEN MAIN TRACKS, FIGS. 5A, 5B, 5C, 5E, 5F & 5G, SHALL BE INSTALLED IN ELECTRIFIED TERRITORY ONLY. FOULING WIRES SHALL NOT BE USED.

6. IN A.C. ELECTRIFIED TERRITORY POWER BONDING SHALL BE IN ACCORDANCE WITH REFERENCES SHOWN IN TABLE ON SHEET NO. 1; HEAVY DUTY CIRCUIT CONTROLLERS SHALL BE PROVIDED, AND SHUNT CIRCUITS ARRANGED AS FOLLOWS:

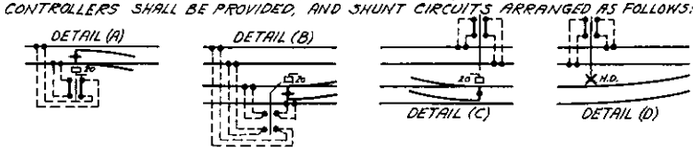

7. IN D.C. ELECTRIFIED TERRITORY POWER BONDING SHALL BE IN ACCORDANCE WITH REFERENCES SHOWN IN TABLE ON SH. 1; HEAVY DUTY CIRCUIT CONTROLLERS SHALL BE PROVIDED AND SHUNT CIRCUITS ARRANGED SIMILAR TO DETAILS (A), (C) & (D) IN NOTE 6; EXCEPT FOR FIGS. 5B, 5C, 5F & 5G WHERE D.C. TYPE HEAVY DUTY CONTROLLERS SO CONNECTED TO OPERATE WITH MECHANICAL LOCKING OF T20 MECHANISMS, FOR CAB SIGNAL SHUNT, WITH SHUNT CIRCUITS ARRANGED SIMILAR TO DETAIL (B) IN NOTE 6, SHALL BE PROVIDED. MECHANICAL STICK CONTACTS IN T20 MECHANISM TO BE USED AS FOLLOWS FOR POINT DETECTOR PROTECTION:

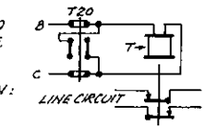

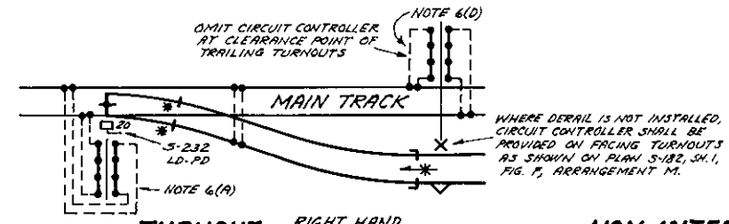

TURNOUT RIGHT HAND TRAILING OR FACING

FIGURE 5J

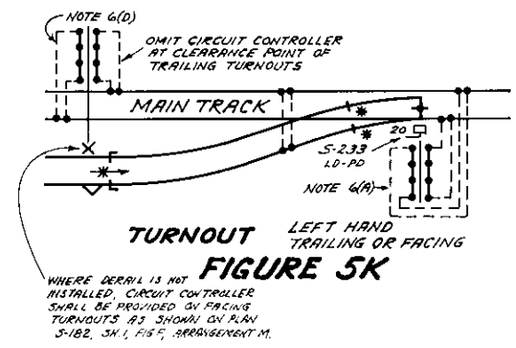

TURNOUT LEFT HAND TRAILING OR FACING

FIGURE 5K

NON-INTERLOCKED SWITCHES

CAB SIGNAL TERRITORY

STEAM ROAD

FOR A.C. ELECTRIFIED TERRITORY (SEE NOTE 6)

FOR D.C. ELECTRIFIED TERRITORY (SEE NOTE 7)

REVISIONS

SUPERSEDES S-803, SH. 5, DATED 5-13-27

SHEET 5 OF 5

S-803

THE PENNSYLVANIA RAILROAD

STANDARD

BONDING AND INSULATION OF SWITCHES

OFFICE OF CHIEF ENGINEER,
PHILA., PA., DEC. 29, 1948.

APPROVED: R. E. Griffith
ASST. CHIEF ENGINEER, T.-C.-S.

APPROVED: R. Trimble
CHIEF ENGINEER

N.O.K.
A.S.B.

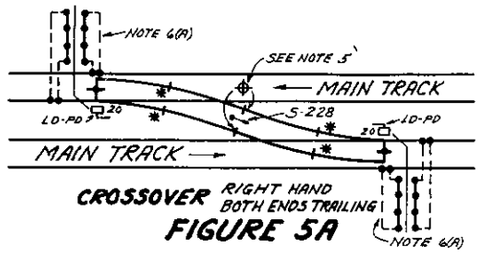

CROSSOVER RIGHT HAND BOTH ENDS TRAILING

FIGURE 5A

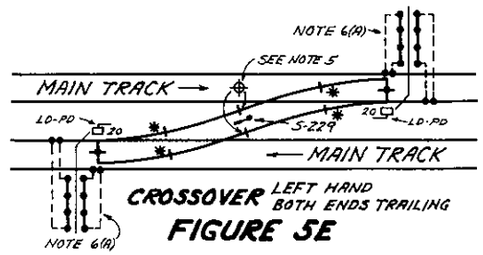

CROSSOVER LEFT HAND BOTH ENDS TRAILING

FIGURE 5E

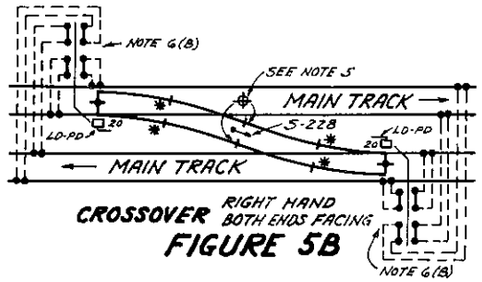

CROSSOVER RIGHT HAND BOTH ENDS FACING

FIGURE 5B

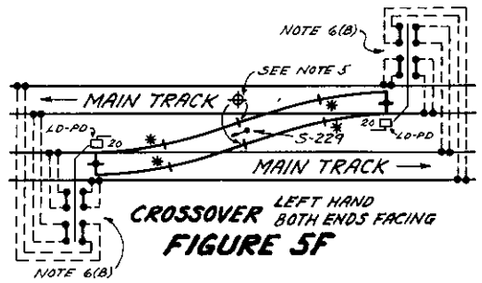

CROSSOVER LEFT HAND BOTH ENDS FACING

FIGURE 5F

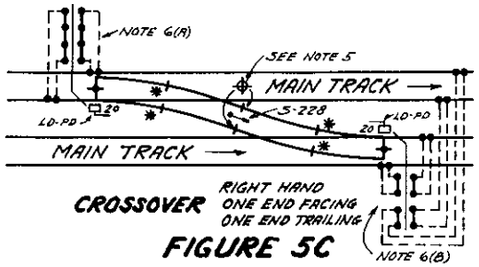

CROSSOVER RIGHT HAND ONE END FACING ONE END TRAILING

FIGURE 5C

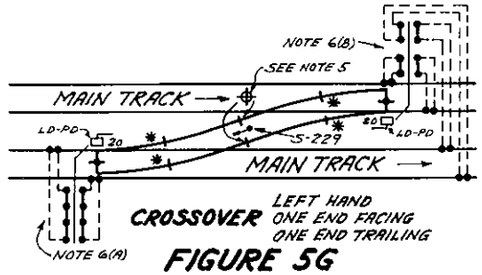

CROSSOVER LEFT HAND ONE END FACING ONE END TRAILING

FIGURE 5G

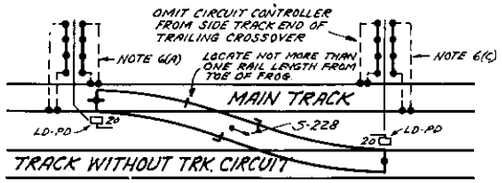

CROSSOVER RIGHT HAND TRAILING OR FACING

(SEE FIGURE 4H)

FIGURE 5D

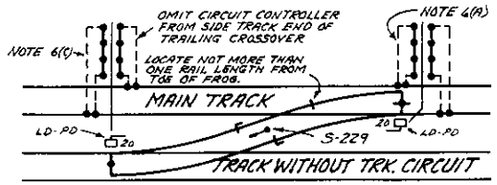

CROSSOVER LEFT HAND TRAILING OR FACING

(SEE FIGURE 4H)

FIGURE 5H

NOTES:-

1. FOR GENERAL NOTES AND DETAIL REFERENCES SEE SHEET NO. 1.
   ✱ = SEE SHEET NO. 1, NOTES 6 & 7.

2. FROGS SHALL BE BONDED IN ACCORDANCE WITH PLAN S-182, SH. 1, FIG. D.

3. SWITCH POINTS SHALL BE BONDED IN ACCORDANCE WITH PLAN S-182, SH. 1, FIG. E.

4. ARRANGEMENT FOR LOCKING OF TURNOUTS AND CROSSOVERS SHALL BE IN ACCORDANCE WITH STD. PLAN BASIC NOS. S-228, S-229, S-232 & S-233 AS INDICATED.

5. INSULATING JOINTS MARKED ⊕ IN CENTER OF CROSSOVER BETWEEN MAIN TRACKS, FIGS. 5A, 5B, 5C, 5E, 5F & 5G, SHALL BE INSTALLED IN ELECTRIFIED TERRITORY ONLY. FOULING WIRES SHALL NOT BE USED.

6. IN A.C. ELECTRIFIED TERRITORY POWER BONDING SHALL BE IN ACCORDANCE WITH REFERENCES SHOWN IN TABLE ON SHEET NO. 1; HEAVY DUTY CIRCUIT CONTROLLERS SHALL BE PROVIDED, AND SHUNT CIRCUITS ARRANGED AS FOLLOWS:

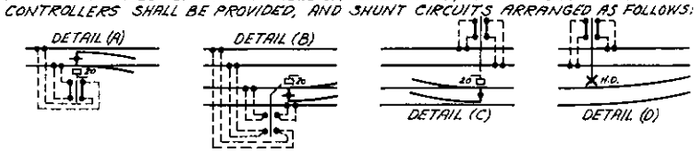

7. IN D.C. ELECTRIFIED TERRITORY POWER BONDING SHALL BE IN ACCORDANCE WITH REFERENCES SHOWN IN TABLE ON SH. 1; HEAVY DUTY CIRCUIT CONTROLLERS SHALL BE PROVIDED AND SHUNT CIRCUITS ARRANGED SIMILAR TO DETAILS (A), (C) & (D) IN NOTE 6; EXCEPT FOR FIGS. 5B, 5C, 5F & 5G WHERE D.C. TYPE HEAVY DUTY CONTROLLERS SO CONNECTED TO OPERATE WITH MECHANICAL LOCKING OF T20 MECHANISMS. FOR CAB SIGNAL SHUNT, WITH SHUNT CIRCUITS ARRANGED SIMILAR TO DETAIL (B) IN NOTE 6, SHALL BE PROVIDED. MECHANICAL STICK CONTACTS IN T20 MECHANISM TO BE USED AS FOLLOWS FOR POINT DETECTOR PROTECTION:

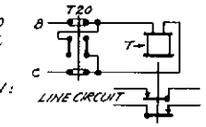

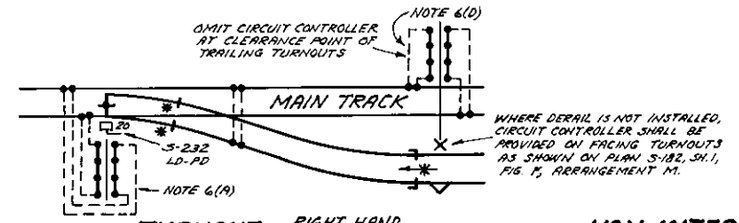

TURNOUT RIGHT HAND TRAILING OR FACING

FIGURE 5J

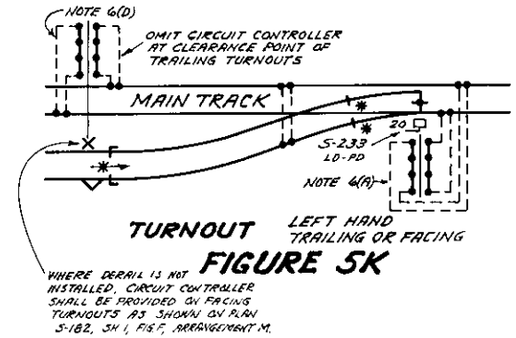

TURNOUT LEFT HAND TRAILING OR FACING

FIGURE 5K

NON-INTERLOCKED SWITCHES

CAB SIGNAL TERRITORY

STEAM ROAD

FOR A.C. ELECTRIFIED TERRITORY (SEE NOTE 6)

FOR D.C. ELECTRIFIED TERRITORY (SEE NOTE 7)

REVISIONS

SUPERSEDES S-803, SH. 5, DATED 5-13-27.

SHEET 5 OF 5

S-803

THE PENNSYLVANIA RAILROAD

STANDARD

BONDING AND INSULATION OF SWITCHES

OFFICE OF CHIEF ENGINEER,
PHILA., PA., DEC. 29, 1948.

APPROVED: H.G. Griffith
ASST. CHIEF ENGINEER, T.-C.-S.

APPROVED: R. Quiggle
CHIEF ENGINEER

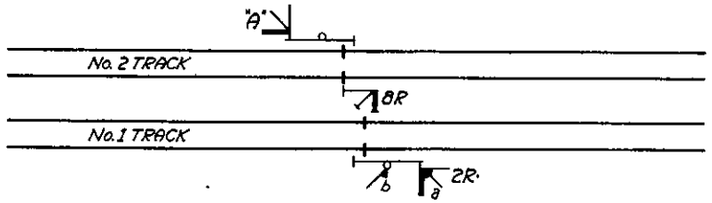

ENERGY FOR POWER-OFF RELAY IS SUPPLIED FROM SECONDARY OF LIGHTING TRANS, THIS BEING THE PREFERABLE ARRANGEMENT. RELAYS WOUND FOR 110V. MAY BE USED, ENERGY BEING SUPPLIED FROM THE 110 V. BUS.

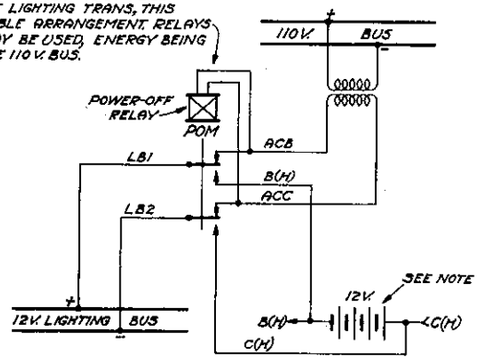

ARRANGEMENT SHALL BE USED WHERE NOT MORE THAN 10 AMPERES ARE REQUIRED.

FIG. 1

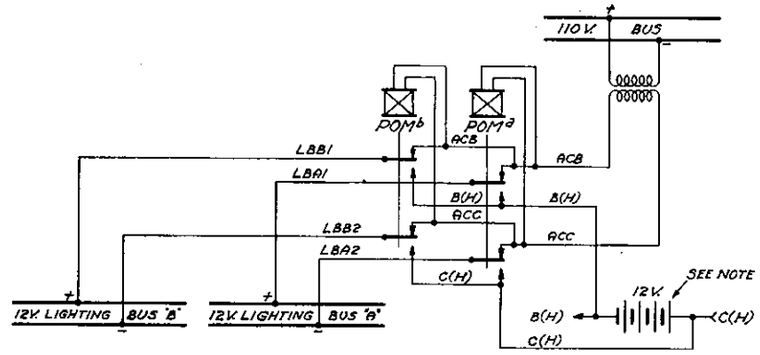

ARRANGEMENT SHALL BE USED WHERE MORE THAN 10 AMPERES ARE REQUIRED, A SEPARATE POWER-OFF RELAY AND LIGHTING BUS BEING PROVIDED FOR EACH 10 AMPERES TO BE SUPPLIED.

FIG. 2

NOTE :-

BATTERY OF SUFFICIENT CAPACITY FOR EIGHT HOURS CONTINUOUS SERVICE SHALL BE PROVIDED. EACH SIGNAL MAY BE CONSIDERED AS CONSUMING 2½ AMPERES IN DETERMINING CAPACITY OF BATTERY.

REVISIONS.

SUPERSEDES PLAN S-805 DATED 10-18-21.

1 SHEET

S-805

THE PENNSYLVANIA RAILROAD

TYPICAL

ARRANGEMENT FOR LIGHTING POSITION LIGHT SIGNALS WHEN NORMAL POWER FAILS

OFFICE OF CHIEF SIGNAL ENGINEER
PHILA., PA., MAY 10, 1928.

NOT TO SCALE

Approved
Chief Signal Engineer

Approved
Chief Engineer

TWO POSITION

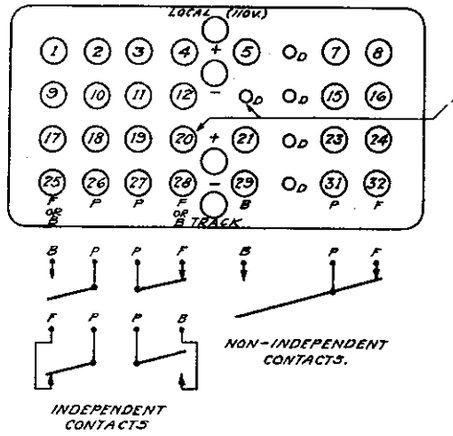

THREE POSITION

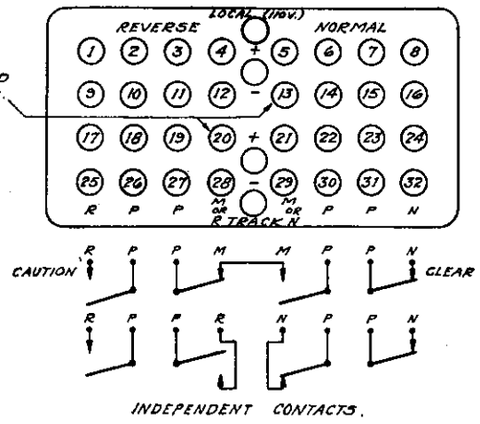

TWO POSITION

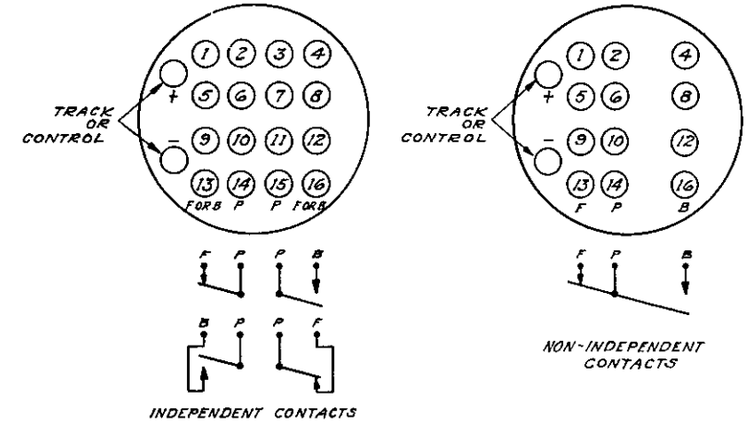

STYLE TV-30 TRACK RELAY (NON-FREQUENCY). U.S.&S.CO.

FOR USE ON STEAM ROAD OR ELECTRIFIED TERRITORY--D.C. PROPULSION. SERVICE INTENDED SHALL BE SPECIFIED IN ORDERING.

ANY COMBINATION OF CONTACTS, NOT EXCEEDING FIFTEEN (15) FRONTS AND ONE (1) BACK FOR A TWO POSITION RELAY AND SEVEN (7) NORMAL, SEVEN (7) REVERSE AND ONE (1) DE-ENERGIZED CONTACT FOR A THREE POSITION RELAY, MAY BE PROCURED.

WHERE LOOP CIRCUITS ARE USED, TERMINAL POST 29 IS NOT AVAILABLE FOR A CONTACT SPACE, BEING USED FOR THE LOOP CONNECTION TO THE MID TAP OF THE TRACK WINDING.

STYLE SLV13 - VANE (NON-FREQUENCY). U.S.&S.CO.

MAY BE WOUND AS A TRACK (FOR USE WITHIN INTERLOCKING LIMITS ON STEAM ROAD OR ELECTRIFIED TERRITORY--D.C. PROPULSION) OR LINE RELAY. SERVICE INTENDED SHALL BE SPECIFIED IN ORDERING.

WHEN WOUND AS A LINE RELAY IT SHALL BE USED ONLY WHERE ITS CONTROLLING CIRCUIT IS ENTIRELY CONFINED TO THE CASE OR BUILDING WHERE THE RELAY IS LOCATED.

ANY COMBINATION OF CONTACTS, NOT EXCEEDING A TOTAL OF EIGHT (8), MAY BE PROCURED.

TWO POSITION

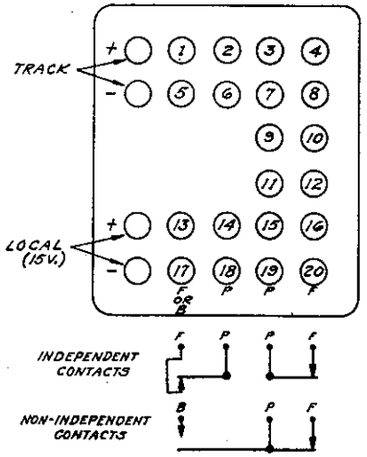

RESONANT CENTRIFUGAL FREQUENCY. U.S.&S.CO.

ELECTRICALLY BRAKED.

FOR USE ON TRACK CIRCUITS IN ELECTRIFIED TERRITORY, A.C. PROPULSION.

ANY COMBINATION OF CONTACTS NOT EXCEEDING A TOTAL OF TEN (10), MAY BE PROCURED.

TWO POSITION

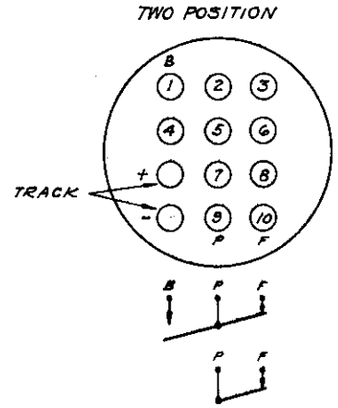

VANE FREQUENCY. U.S.&S.CO.

FOR USE ON TRACK CIRCUITS WITHIN INTERLOCKING LIMITS IN ELECTRIFIED TERRITORY, A.C. PROPULSION.

MAXIMUM NUMBER OF CONTACTS:- FOUR (4) FRONT AND TWO (2) BACK, NON-INDEPENDENT.

REVISIONS

6-7-26. STYLE TV30 RELAY ADDED AND CONTACT TERMINAL POSTS RENUMBERED.
APPROVED:- A.H. Rudd

REDRAWN FROM SHEET 2 OF PLAN S-806, DATED 3-9-23.

SHEET 1 OF 2

S-806

THE PENNSYLVANIA RAILROAD
CONTACT ARRANGEMENT
OF ALTERNATING CURRENT RELAYS

OFFICE OF CHIEF SIGNAL ENGINEER
PHILA., PA., JUNE 7, 1926

NOT TO SCALE

Approved A.H. Rudd
Chief Signal Engineer

Approved J.B. Murray
Asst. Chief Engineer

TWO POSITION.

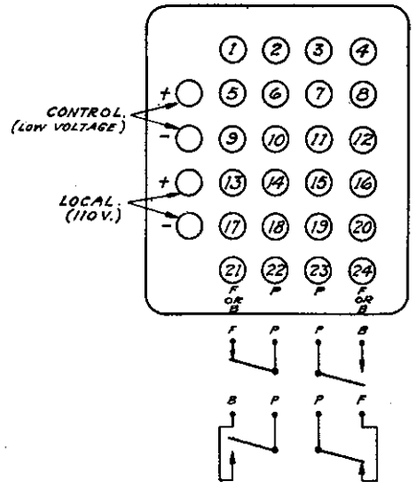

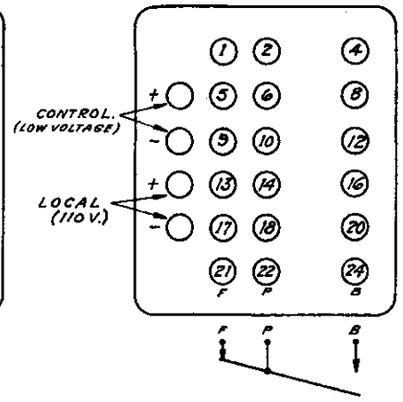

THREE POSITION.

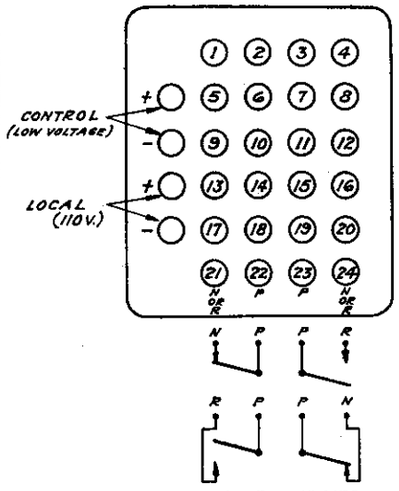

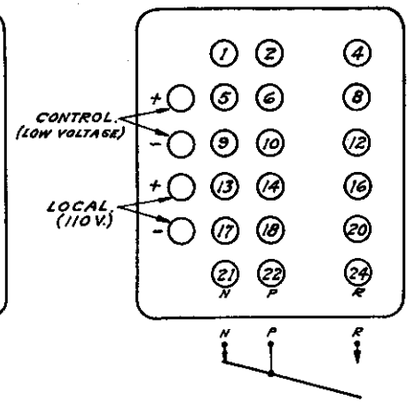

TWO POSITION

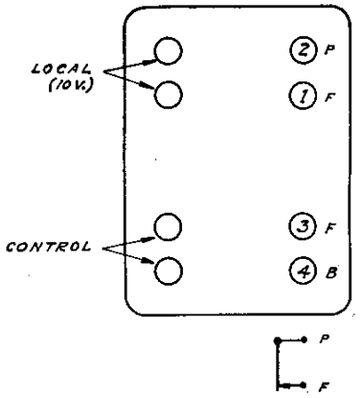

STYLE T2LV14 (LIGHT-OUT). U.S.&S.CO.
(SEE NOTE)

MAXIMUM NUMBER OF CONTACTS :- TWO (2) FRONT.

MODEL 15 VANE LINE RELAY. U.S.& S. CO.

ANY COMBINATION OF CONTACTS, NOT EXCEEDING A TOTAL OF TWELVE (12), MAY BE PROCURED.

TWO POSITION.

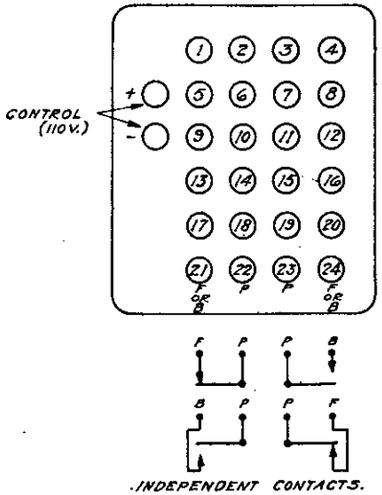

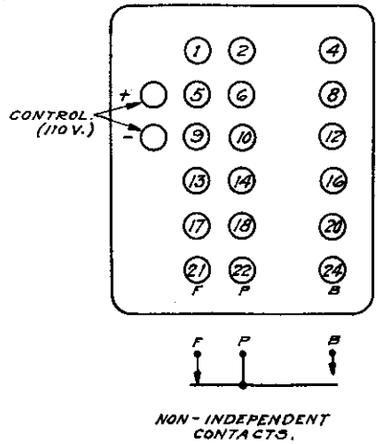

STYLE SV30 (SLOW ACTING) VANE. U.S.& S. CO.

ANY COMBINATION OF CONTACTS, NOT EXCEEDING A TOTAL OF TWELVE (12), OF WHICH NOT MORE THAN TEN (10) CAN BE FRONT, MAY BE PROCURED.

NOTE :-
STYLE T2LV14 RELAYS MAY BE USED UNTIL THE STOCK OF THIS TYPE IS EXHAUSTED. WHEN NECESSARY TO ORDER NEW "LIGHT-OUT" RELAYS, STANDARD MODEL 15 VANE, WITH 110V. LOCAL, SHALL BE ORDERED.

REVISIONS.

6-7-26. MODEL 15 VANE FORMERLY ALSO USED AS A TRACK & "38" RELAY, MODEL 16 INDUCTION TYPE ELIMINATED AND CONTACT TERMINAL POSTS RENUMBERED.
APPROVED:- A.H. Rudd

REDRAWN FROM SHTS. 1&3 OF PLAN S-806, DATED 3-9-23.

SHEET 2 OF 2

S-806

THE PENNSYLVANIA RAILROAD
CONTACT ARRANGEMENT
OF ALTERNATING CURRENT RELAYS

OFFICE OF CHIEF SIGNAL ENGINEER
PHILA., PA., JUNE 7, 1926

NOT TO SCALE

Approved A.H. Rudd
Chief Signal Engineer

Approved J.B. Murray
Asst. Chief Engineer

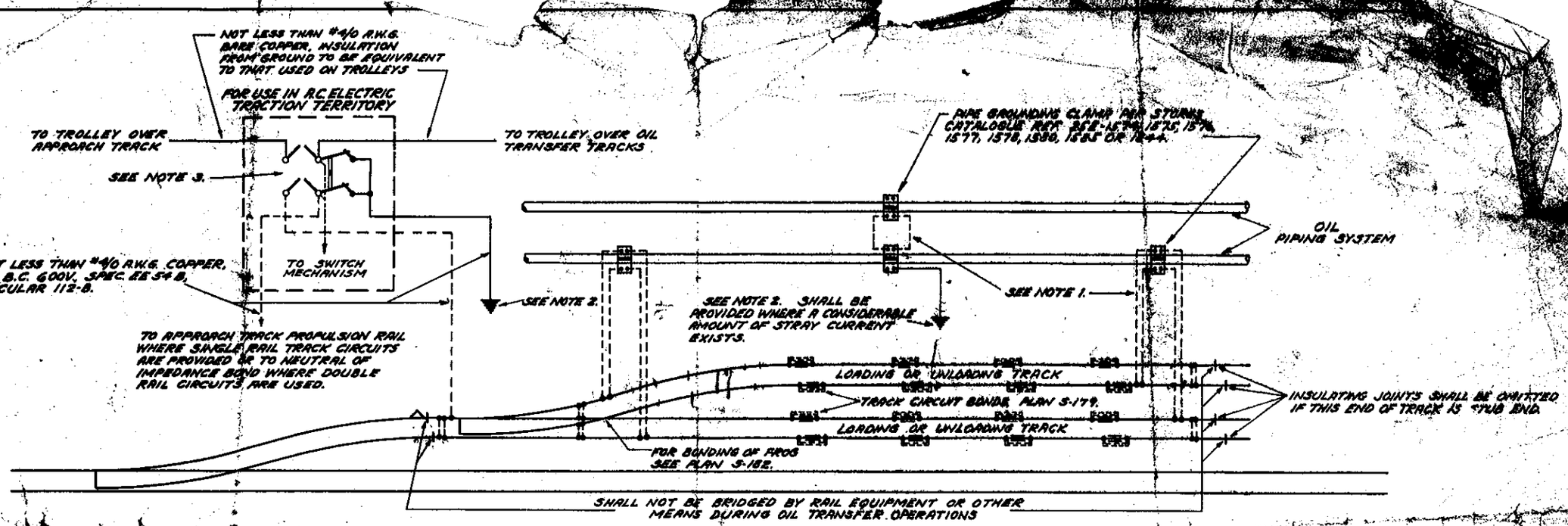

NOTE:-

1. BONDS BETWEEN PIPES, RAILS, PIPING SYSTEM AND RAILS, AND PIPING SYSTEM AND GROUND SHALL HAVE A COMBINED CONDUCTIVITY OF NOT LESS THAN A NO. 0 COPPER CABLE. THREE COPPER COVERED CABLES OR TWO COPPER CABLES (7 STRAND-NO. 10 AWG., PLAN S-182) ARE EQUIVALENT TO ONE NO. 0 COPPER CABLE IN CONDUCTIVITY.
2. GROUNDING IN GENERAL SHALL BE IN ACCORDANCE WITH G.S.T. SPEC. 2001, USING GROUND ROD PER STORES CATALOGUE REF. 28-5228 AND CLAMP 28-4346.
3. THE DISCONNECTING SWITCH ARRANGEMENT REQUIRED MAY BE OBTAINED BY USING TWO DISCONNECTING, S.P.S.T., 15 K.V., 600 OR 1200 AMP., MANUALLY REMOTE CONTROLLED SWITCHES, ITEM 69 IN SPEC. P-230-7, EXCEPT BLADE IS TO BE GROUNDED WHEN IN OPEN POSITION; THE INSULATORS TO BE EQUAL TO LOCKE #23105. SWITCHES ARE TO BE MECHANICALLY CONNECTED TO OPERATE AS A DOUBLE-POLE UNIT, AND THE GROUNDING BLADE SOCKETS ARE TO BE ELECTRICALLY CONNECTED. WHERE SHORT CIRCUIT CURRENT FROM TROLLEYS WILL NOT EXCEED 25,000 AMPERES, A SWITCH OF 600 AMPERE RATING SHALL BE USED. WHERE SHORT CIRCUIT CURRENT FROM TROLLEYS IS ABOVE 25,000 AMPERES AND NOT EXCEEDING 50,000 AMPERES, A SWITCH OF 1200 AMPERE RATING SHALL BE USED.
4. THIS PLAN IS FOR USE IN CONNECTION WITH CURRENT ISSUE OF LETTER OF GENERAL PRACTICE NO. 140 FOR THE PREVENTION OF ELECTRIC SPARKS THAT MAY CAUSE FIRE DURING THE TRANSFER OF INFLAMMABLE LIQUIDS TO OR FROM RAIL EQUIPMENT.
5. IN A.C. ELECTRIFIED TERRITORY APPROVAL OF THE INDIVIDUAL CASE BY THE CHIEF ENGINEER AND CHIEF OF MOTIVE POWER SHALL BE OBTAINED PRIOR TO PLACING THE FACILITIES IN SERVICE.

STEAM ROAD TERRITORY
(OMIT DISCONNECT SWITCH, IT'S CONNECTIONS, AND THE REQUIREMENTS OF NOTE 3)

A.C. ELECTRIC TRACTION TERRITORY

REVISIONS

SUPERSEDES PLAN S-8[illegible] DATED [illegible]

SHEET 1 OF 2

S-80[illegible]

THE PENNSYLVANIA RAILROAD

TYPICAL

PROTECTION OF OIL SIDINGS FROM ELECTRIC SPARKS

OFFICE OF CHIEF ENGINEER,
PHILADELPHIA, PA., JUNE 22, 1945.

NOT TO SCALE

APPROVED: R. Griffith
ASST. CHIEF ENGINEER T.C.&S.

APPROVED: J. Stair, Jr.
ELECTRICAL ENGINEER

APPROVED:

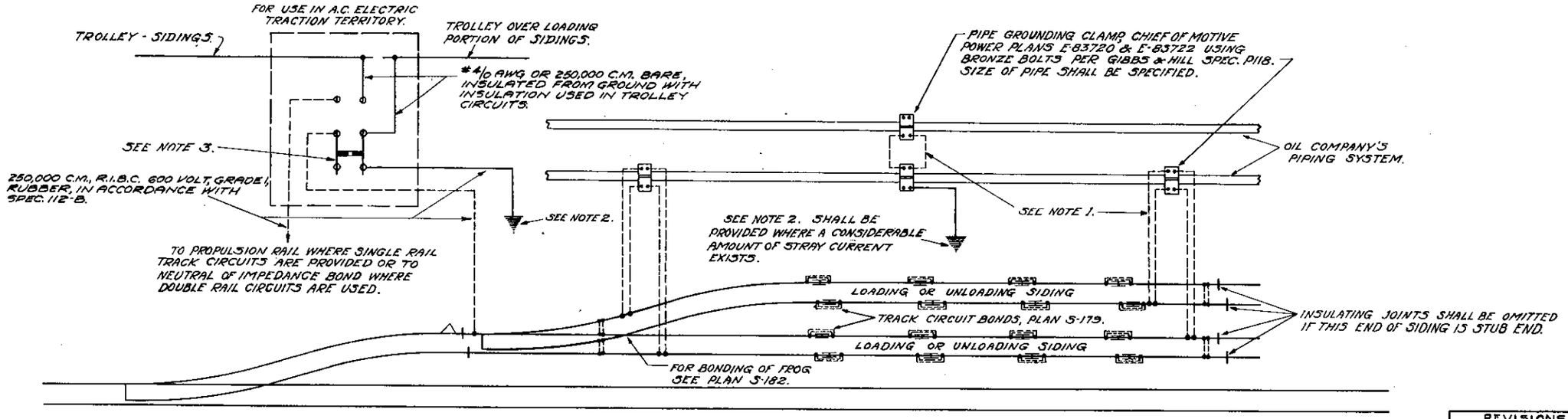

NOTE:-

1. BONDS BETWEEN PIPES, RAILS, PIPING SYSTEM & RAILS AND PIPING SYSTEM & GROUND SHALL HAVE A COMBINED CONDUCTIVITY OF NOT LESS THAN A NO. 0 COPPER CABLE. THREE COPPER COVERED CABLES OR TWO COPPER CABLES (7 STRAND - NO. 10 A.W.G., PLAN S-182) ARE EQUIVALENT TO ONE NO. 0 COPPER CABLE IN CONDUCTIVITY.
2. GROUNDING IN GENERAL SHALL BE IN ACCORDANCE WITH G.S.T. SPEC. 2001, USING GROUND ROD PER STORES CATALOGUE REF. 55-5224 AND CLAMP 55-5346.
3. DISCONNECTING SWITCH. SHALL BE IN ACCORDANCE WITH THE RAILWAY AND INDUSTRIAL ENGINEERING CO'S. TYPE DTAU-AU SWITCH, DRAWING NO. 44246-F, OR EQUIVALENT.

WHERE SHORT CIRCUIT CURRENT FROM TROLLEYS WILL NOT EXCEED 25,000 AMPERES, A SWITCH OF 600 AMPERE RATING SHALL BE USED.

WHERE SHORT CIRCUIT CURRENT FROM TROLLEYS IS ABOVE 25,000 AMPERES AND NOT EXCEEDING 50,000 AMPERES A SWITCH OF 1200 AMPERE RATING SHALL BE USED.

4. THIS PLAN IS FOR USE IN CONNECTION WITH CURRENT ISSUE OF C.E. 10 "PRACTICE FOR THE PROTECTION OF TRACKS USED IN THE LOADING OR UNLOADING OF INFLAMMABLE LIQUIDS FROM THE DANGER OF FIRE CAUSED BY ELECTRIC SPARKS."
5. IN CASES WHERE IT IS UNDESIRABLE TO DEENERGIZE THE TROLLEY THE MATTER MUST BE REFERRED TO THE CHIEF ENGINEER AND CHIEF OF MOTIVE POWER.

REVISIONS.

7-15-35. Notes referring to wires connecting to disconnect switch changed. Note 5 added.
Approved: Chief Sig. Engr. Approved: Elec. Engr.

A.C. ELECTRIC TRACTION TERRITORY

Sheet 1 of 2.

S-807

THE PENNSYLVANIA RAILROAD
TYPICAL
PROTECTION OF OIL SIDINGS FROM ELECTRIC SPARKS

OFFICE OF CHIEF SIGNAL ENGINEER, PHILA., PA., APRIL 11, 1933.

NOT TO SCALE.

APPROVED:- CHIEF SIGNAL ENGINEER. APPROVED:- ELECTRICAL ENGINEER. APPROVED:- CHIEF ENGINEER.

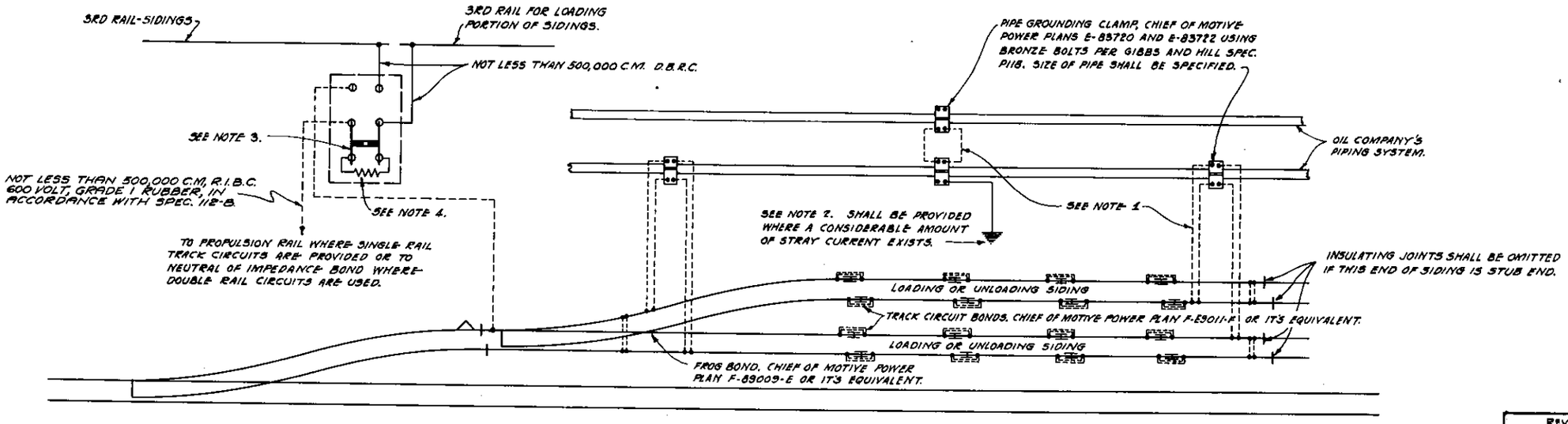

NOTE:-

1. BONDS BETWEEN PIPES, RAILS, PIPING SYSTEM AND PIPING SYSTEM AND GROUND SHALL HAVE A COMBINED CONDUCTIVITY OF NOT LESS THAN 250,000 C.M. COPPER CABLE.
2. GROUNDING IN GENERAL SHALL BE IN ACCORDANCE WITH G.S.T. SPEC. 2001, USING GROUND ROD PER STORES CATALOGUE REF. 55-5224 AND CLAMP 55-4346.
3. SPECIAL D.P.D.T. SWITCH — STORES CATALOGUE REF. 25-E-783049-L.
4. FOR DETAILS OF GROUNDING RESISTANCE AND MOUNTING, SEE CHIEF OF MOTIVE POWER DRAWING E-404775.
5. ELECTRICAL TESTS SHOULD BE MADE AT TIME OF BONDING TO INSURE THAT NO EXCESSIVE CURRENTS NOR OTHER UNDESIRABLE CONDITIONS DEVELOP.
6. THIS PLAN IS FOR USE IN CONNECTION WITH CURRENT ISSUE OF C.E. 10, "PRACTICE FOR THE PROTECTION OF TRACKS USED IN THE LOADING OR UNLOADING OF INFLAMMABLE LIQUIDS FROM DANGER OF FIRE CAUSED BY ELECTRIC SPARKS."

D.C. ELECTRIC TRACTION TERRITORY.

REVISIONS

Sheet 2 of 2

S-807

THE PENNSYLVANIA RAILROAD
TYPICAL
PROTECTION OF OIL SIDINGS FROM ELECTRIC SPARKS

Office of Chief Signal Engineer:
Phila., Pa., July 13, 1935.

Not to Scale.

Approved: Chief Signal Engineer

Approved: H. C. Griffith Electrical Engineer

Approved: Chief Engineer

NOTE:-
LETTERS "A", "B", "C", ETC, INDICATE INDIVIDUAL TRACK CIRCUITS. DOTTED LINES INDICATE TRACK CIRCUIT CONNECTIONS WHICH SHALL BE IN ACCORDANCE WITH PENNA. R.R. SYSTEM STANDARD PLAN BASIC NO. S-182.
⟹ INSULATING JOINTS.
INSULATING JOINTS MARKED * SHALL NOT BE LOCATED ON THE ARMS OF THE CROSSING FROGS, EXCEPT BY SPECIAL PERMISSION, NOR SHALL THEY BE LOCATED MORE THAN 33 FEET FROM THE ENDS OF THE ARMS.

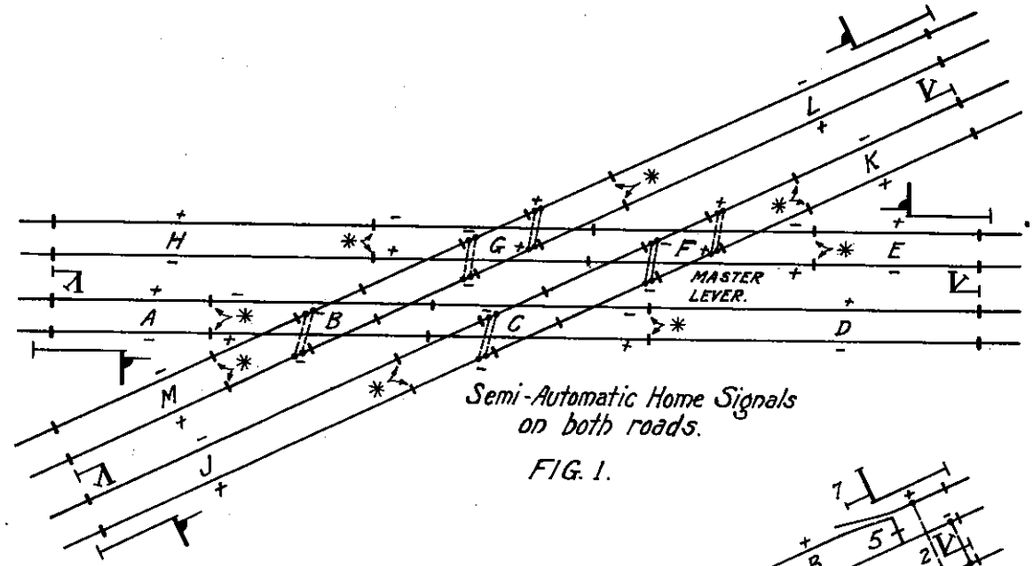

Semi-Automatic Home Signals on both roads.

FIG. 1.

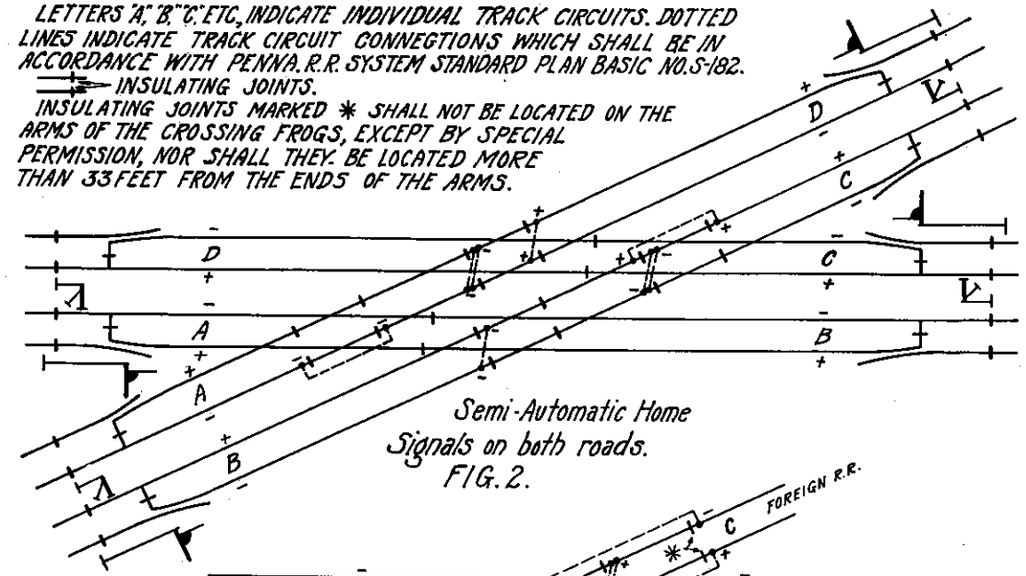

Semi-Automatic Home Signals on both roads.

FIG. 2.

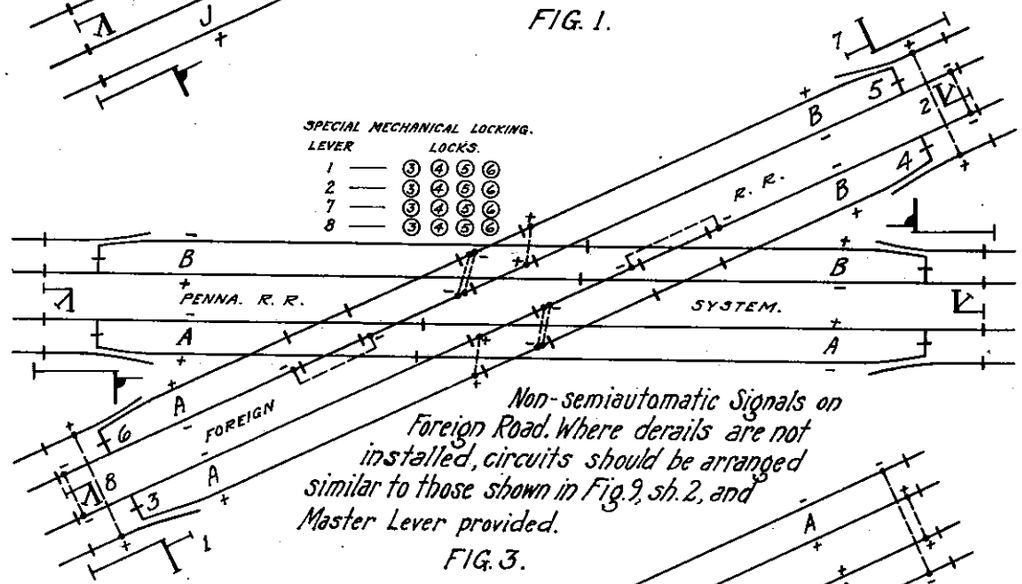

Non-semiautomatic Signals on Foreign Road. Where derails are not installed, circuits should be arranged similar to those shown in Fig. 9, sh. 2, and Master Lever provided.

FIG. 3.

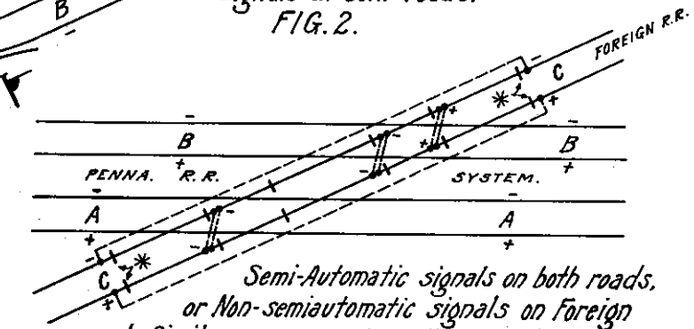

Semi-Automatic signals on both roads, or Non-semiautomatic signals on Foreign road. Similar arrangement shall be used where signals on both roads are semi-automatic and Penna. R.R. System is the single track road.

FIG. 4.

ARRANGEMENTS SHOWN SHALL BE USED WHEN ANGLE OF CROSSING IS FROM 9°30' UP TO AND NOT INCLUDING 30°.

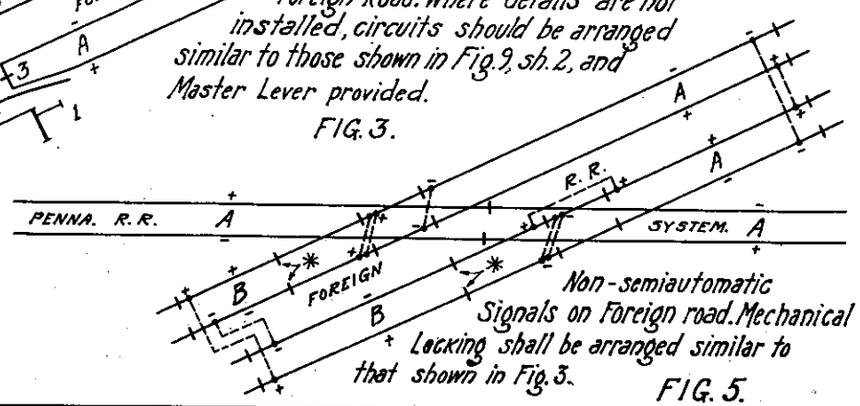

Non-semiautomatic Signals on Foreign road. Mechanical Locking shall be arranged similar to that shown in Fig. 3.

FIG. 5.

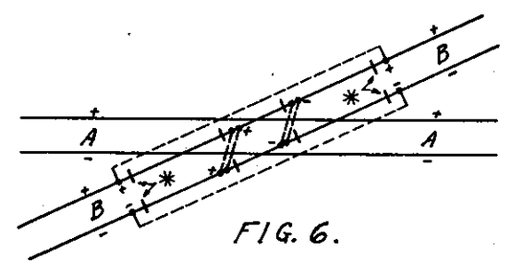

FIG. 6.

REVISIONS.

SHEET 1 OF 3

S-808

PENNSYLVANIA RAILROAD SYSTEM

TYPICAL TRACK CIRCUIT ARRANGEMENT

FOR CROSSING FROGS

OFFICE OF CHIEF SIGNAL ENGINEER, PHILA., PA., SEPT. 4, 1924.

NOT TO SCALE

Approved Chief Signal Engineer

Approved Engineer of Standards

Approved

N.C.
M.P.

MEMORANDA TO ACCOMPANY P.R.R. STANDARD MATERIAL PLANS
S-410-D, S-465-B, S-466-A, S-467-A, S-486-D,
S-487-D, S-497-D.

S-410-D. Plan redrawn and revised. Dwarf signal changed to show double lamps, new optical arrangement, and new design of case. Pedestal Signal 4102 added.

S-465-B. Plan redrawn and revised. Signs 4651 and 4652 changed to agree with A. R. A. Standard. Details of Adapter Clamp and Hook Bolt removed. New marker sign 4654 added.

S-466-A. New plan showing details of Signs shown on S-465-B.

S-467-A. New plan showing specifications for signs and reflector buttons shown on S-465-B.

S-486-D. Revised. Frosting removed and gasket addes to Lens 4864. Cover Glass 4867 removed.

S-487-D. Revised. Roundel 4877 added.

S-497-D. Fibre duct shifted and wood trunking removed on 4972. Wood trunking also removed on 4974. No. 4975 is new foundation for pedestal signal; the former 4975 has been removed from plan, as 4974 is sufficient foundation for both high and low type position light signals. No. 4973 redesigned for the new shape dwarf signal.

A.H.RUDD
Chief Signal Engineer

JPH

MEMORANDA TO ACCOMPANY P.R.R. STANDARD
MATERIAL PLANS S-184-E & S-513-E

S-184-E Plan Revised. Parts 1844 & 1846 redesigned and material formerly brass. Parts 1845 & 1847 formerly brass only. Specifications for Bronze added. Order No. 18412 added for Parkway Outlet.

S-513-E Plan Revised. Bus strip 51312 added. Dimensions of 51311 changed.

A. H. Rudd
Chief Signal Engineer

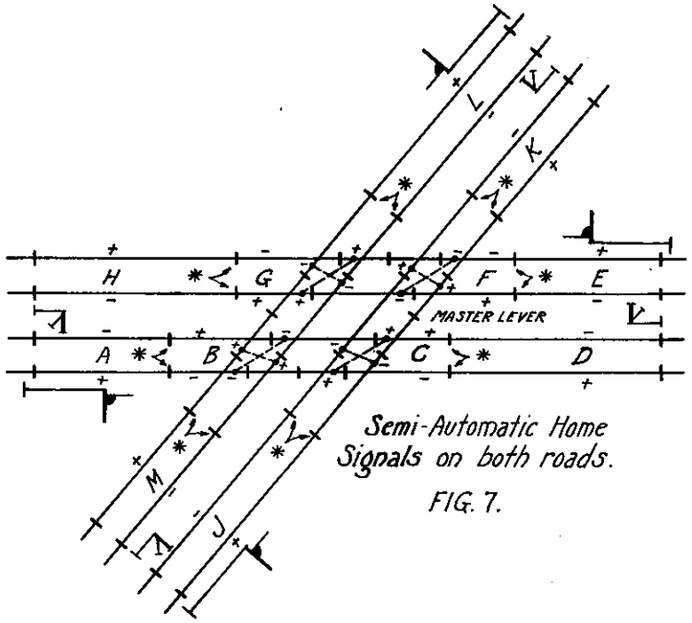

Semi-Automatic Home Signals on both roads.

FIG. 7.

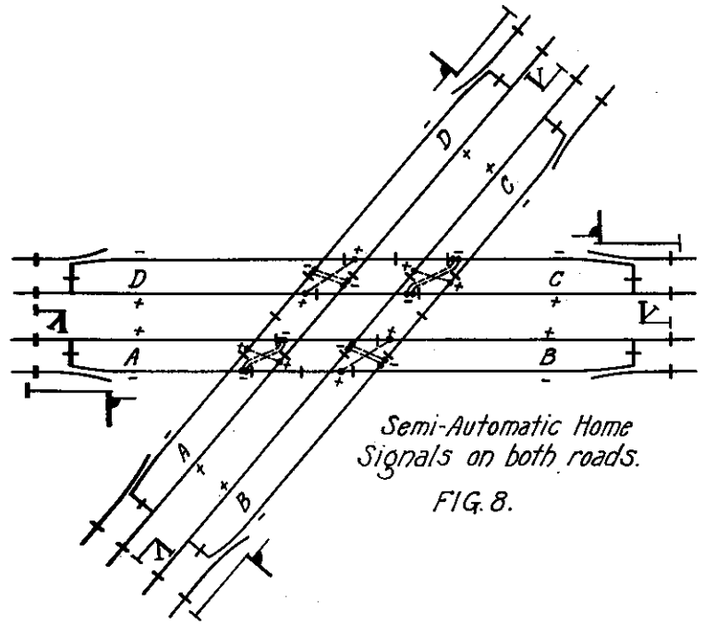

Semi-Automatic Home Signals on both roads.

FIG. 8.

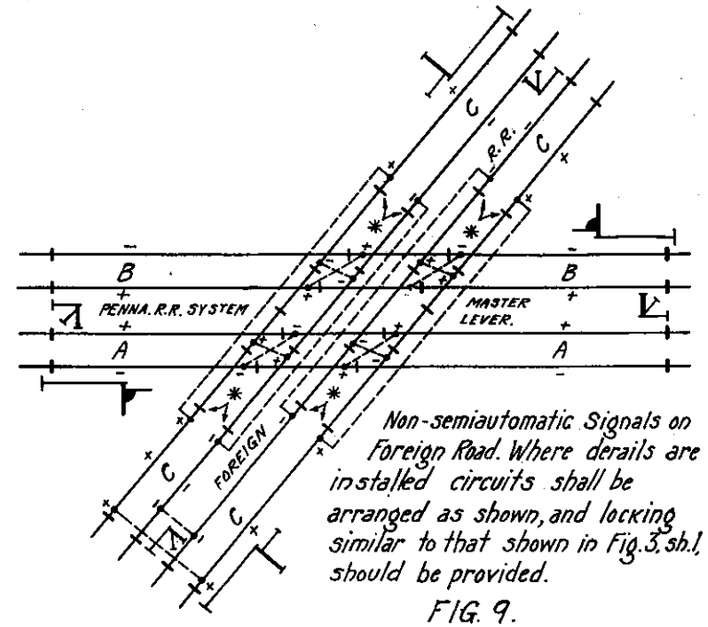

Non-semiautomatic Signals on Foreign Road. Where derails are installed circuits shall be arranged as shown, and locking similar to that shown in Fig. 3, sh. 1, should be provided.

FIG. 9.

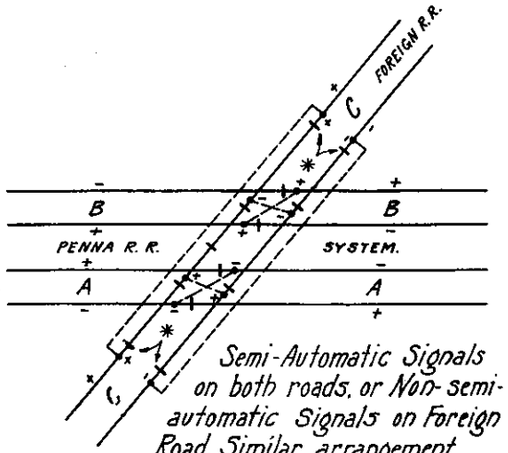

Semi-Automatic Signals on both roads, or Non-semi-automatic Signals on Foreign Road. Similar arrangement shall be used where signals on both roads are semi-automatic and Penna. R.R. System is the single track road.

FIG. 10.

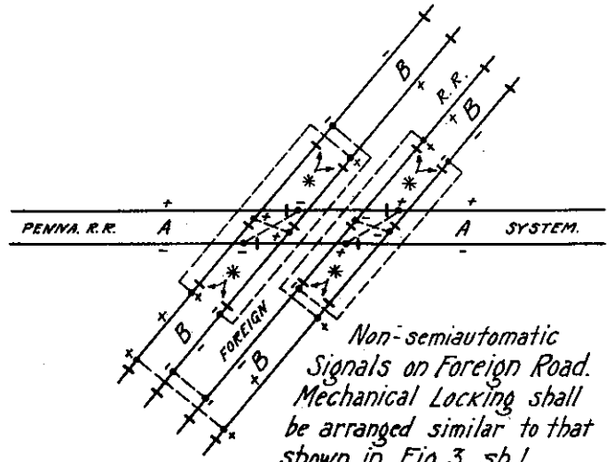

Non-semiautomatic Signals on Foreign Road. Mechanical Locking shall be arranged similar to that shown in Fig. 3, sh. 1.

FIG. 11.

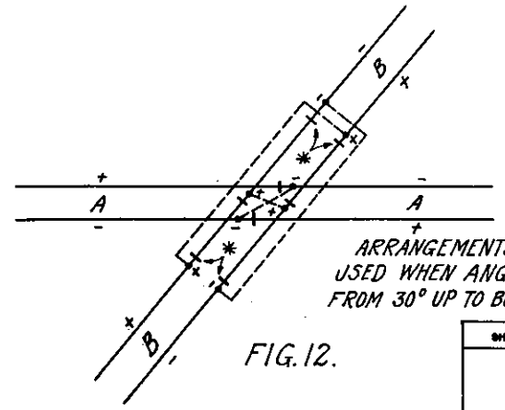

ARRANGEMENTS SHOWN SHALL BE USED WHEN ANGLE OF CROSSING IS FROM 30° UP TO BUT NOT INCLUDING 60°.

FIG. 12.

FOR GENERAL NOTES SEE SHEET NO. 1.

REVISIONS.

SUPERSEDES PLAN S-808 DATED 2-26-21 FOR ANGLES ABOVE 43°30'.

SHEET 2 OF 3

S-808

PENNSYLVANIA RAILROAD SYSTEM

TYPICAL TRACK CIRCUIT ARRANGEMENT

FOR CROSSING FROGS

OFFICE OF CHIEF SIGNAL ENGINEER, PHILA., PA., SEPT. 4, 1934.

NOT TO SCALE

Approved: Chief Signal Engineer

Approved: Engineer of Standards

Approved: Chief Engineer

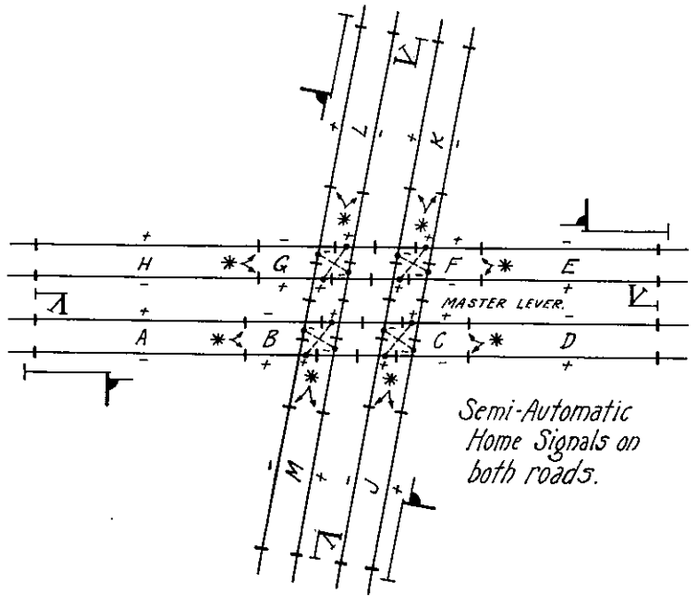

Semi-Automatic Home Signals on both roads.

FIG. 13.

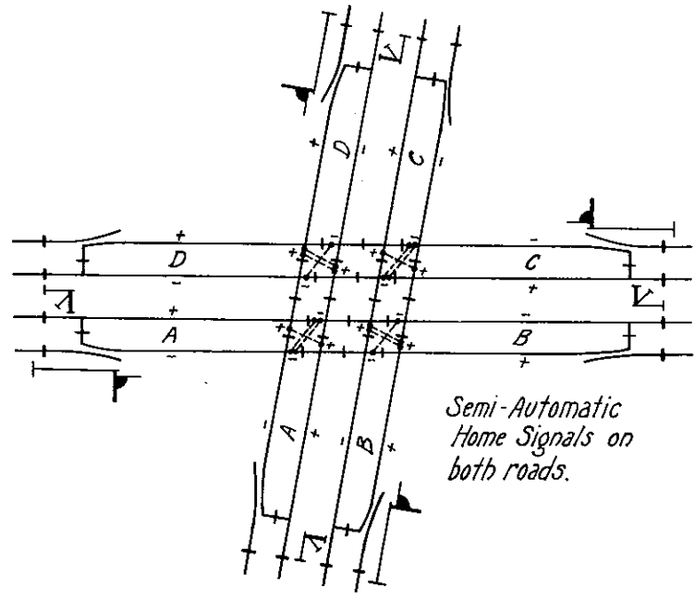

Semi-Automatic Home Signals on both roads.

FIG. 14.

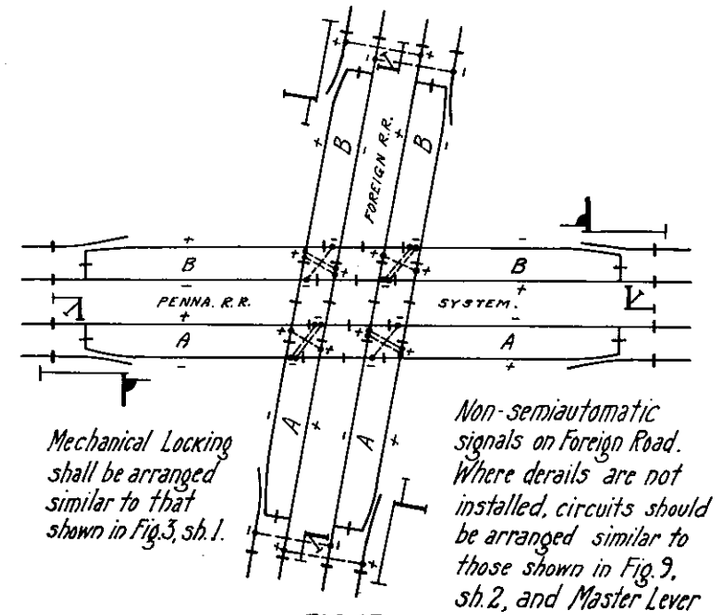

Mechanical Locking shall be arranged similar to that shown in Fig.3, sh.1.

Non-semiautomatic signals on Foreign Road. Where derails are not installed, circuits should be arranged similar to those shown in Fig.9, sh.2, and Master Lever provided.

FIG. 15.

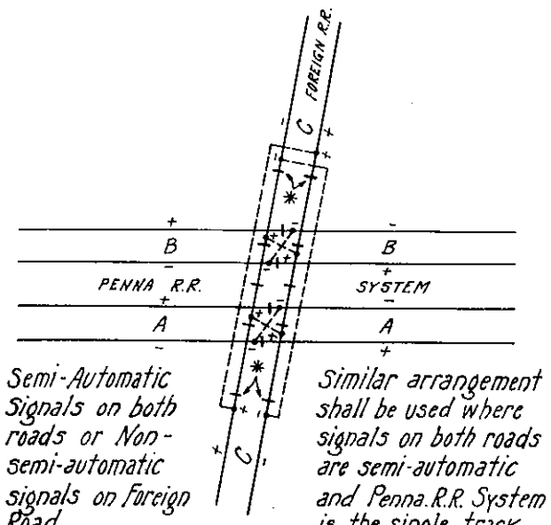

Semi-Automatic Signals on both roads or Non-semi-automatic signals on Foreign Road.

Similar arrangement shall be used where signals on both roads are semi-automatic and Penna. R.R. System is the single track road.

FIG. 16.

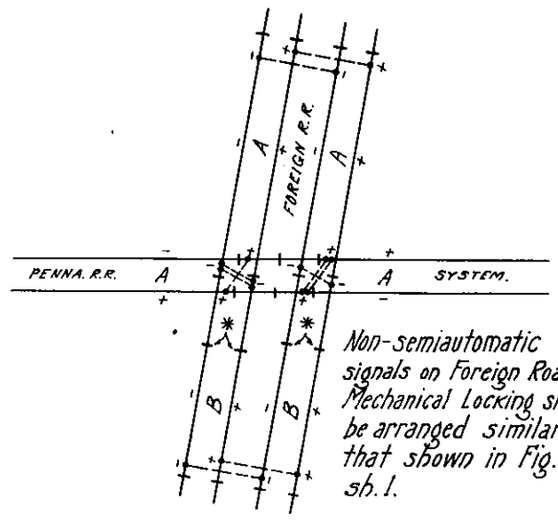

Non-semiautomatic signals on Foreign Road. Mechanical Locking shall be arranged similar to that shown in Fig.3, sh.1.

FIG. 17.

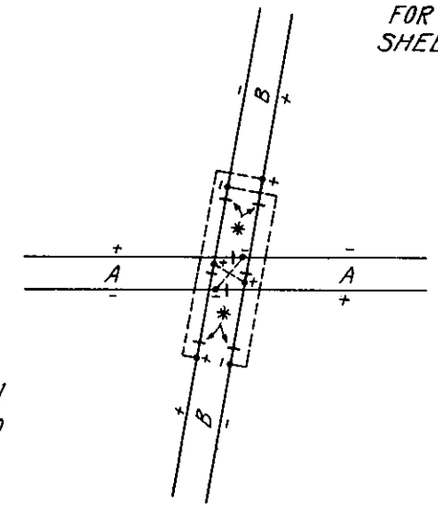

FIG. 18.

FOR GENERAL NOTES SEE SHEET NO. 1.

ARRANGEMENTS SHOWN SHALL BE USED WHEN ANGLE OF CROSSING IS FROM 60° TO 90°.

REVISIONS.

SUPERSEDES PLAN S-808 DATED 2-26-21 FOR ANGLES SHOWN.

SHEET 3 OF 3

S-808

PENNSYLVANIA RAILROAD SYSTEM

TYPICAL TRACK CIRCUIT ARRANGEMENT

FOR CROSSING FROGS

OFFICE OF CHIEF SIGNAL ENGINEER, PHILA., PA., SEPT. 4, 1924.

NOT TO SCALE

Approved — Chief Signal Engineer

Approved — Engineer of Standards

Approved — Chief Engineer

A.E.C.
H.A.H.

FOR NEUTRAL OR TWO POSITION TRACK RELAYS.

THE POLARITY OF ADJACENT TRACK SECTIONS SHALL BE OPPOSITE OR STAGGERED.

FOR POLARIZED OR THREE POSITION TRACK RELAYS.

AT INTERLOCKINGS:-

THE POLARITY OF ADJACENT TRACK SECTIONS SHALL BE OPPOSITE OR STAGGERED EXCEPT AS FOLLOWS:

AT HOME SIGNALS, WHEN THE POLE-CHANGER AT THE HOME SIGNAL LOCATION IS IN ITS NORMAL POSITION, IN CASE AN UNUSUAL ARRANGEMENT OF INSULATING JOINTS WOULD RESULT WITHIN THE INTERLOCKING IN ORDER TO SECURE LIKE POLARITIES AT THE HOME SIGNAL LOCATION, THE POLARITIES SHALL BE STAGGERED AND THE STANDARD ARRANGEMENT OF JOINTS PROVIDED WITHIN THE INTERLOCKING. SEE FIG. 1.

WHERE A SIGNAL LOCATED AT THE LEAVING END OF AN INTERLOCKING, IS DISTANT TO ANOTHER HOME SIGNAL, LIKE POLARITIES SHALL BE PROVIDED WHEN THE SIGNAL IS IN ITS NORMAL POSITION. SEE FIG. 2.

OUTSIDE OF INTERLOCKINGS:-

THE POLARITIES OF ADJACENT TRACK CIRCUITS SHALL BE OPPOSITE OR STAGGERED WHEN THE POLARITY OF THE TRACK SECTION BEYOND IS SUCH THAT THE RELAY FOR THAT SECTION IS IN ITS NORMAL OR CLEAR POSITION. SEE FIG. 3.

THE POLARITIES OF ADJACENT TRACK CIRCUITS AT CUT-SECTION LOCATION NEED NOT BE STAGGERED WHERE THE FEED FOR THE FIRST SECTION IS CONTROLLED OVER THE TRACK RELAY FOR THE SECTION BEYOND.

IN GENERAL, THE POLARITY IN POLARIZED TERRITORY SHOULD ALWAYS BE SO ARRANGED THAT, SHOULD THE INSULATING JOINTS BREAK DOWN WITH A TRAIN OR A BROKEN RAIL IN THE SECTION AHEAD, THE POLARITY OF THE SECTION APPROACHING A SIGNAL WILL BE SUCH AS TO HOLD OR SHIFT THE CONTACTS OF THE RELAY FOR THE SECTION BEYOND TO THE REVERSE (APPROACH) POSITION.

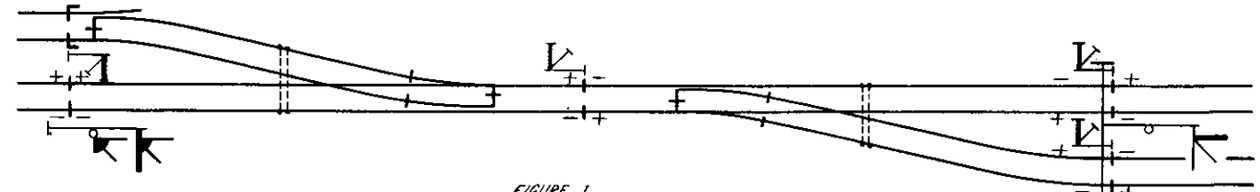

FIGURE 1

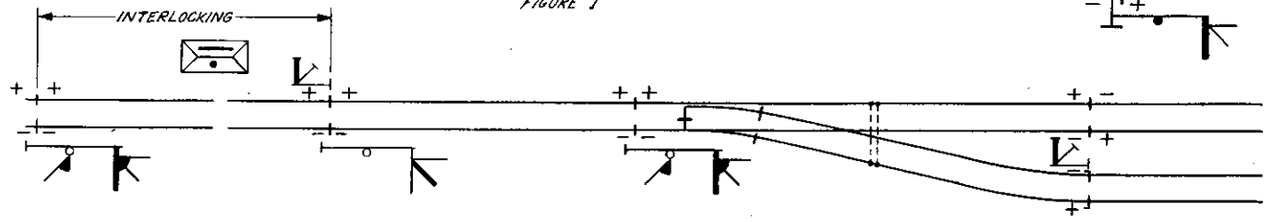

FIGURE 2

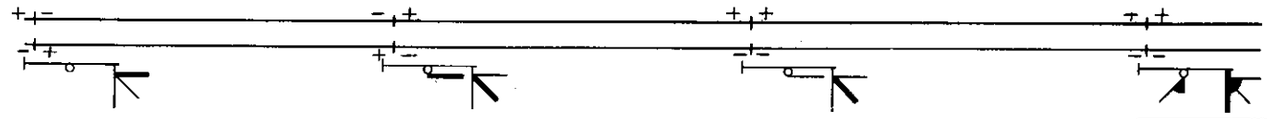

FIGURE 3

REVISIONS

SUPERSEDES PLAN S 809. DATED 12-13-20.

1 SHEET

S-809

THE PENNSYLVANIA RAILROAD
STANDARD

TRACK CIRCUIT POLARITY

OFFICE OF CHIEF SIGNAL ENGINEER,
PHILA., PA., APRIL 30, 1920.

NOT TO SCALE

Approved

Chief Signal Engineer

Approved

Chief Engineer

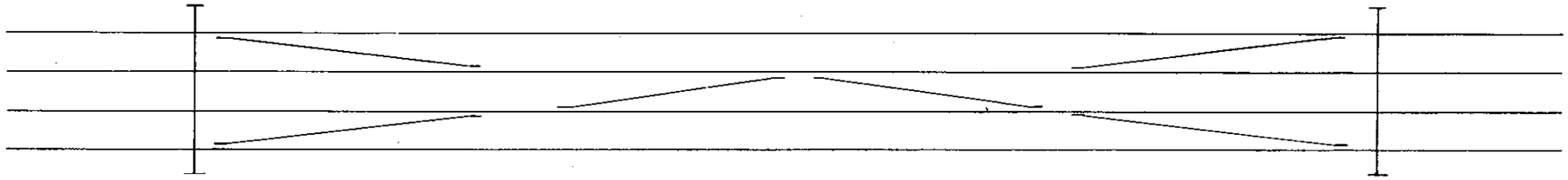

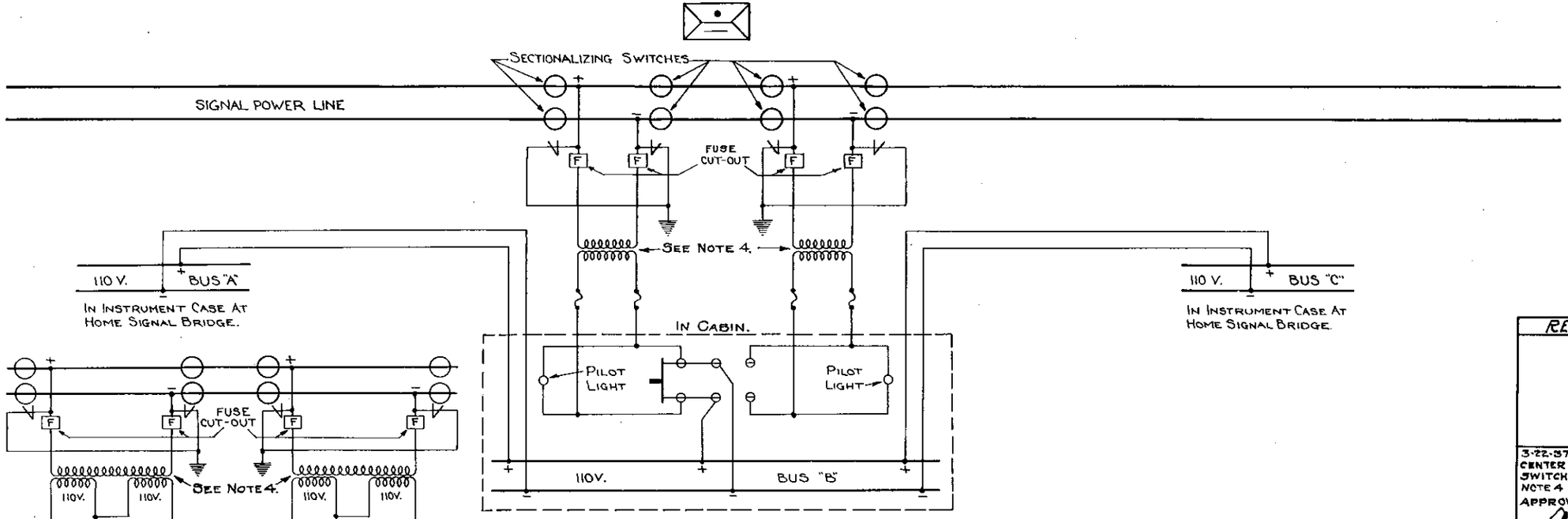

FIG. 1

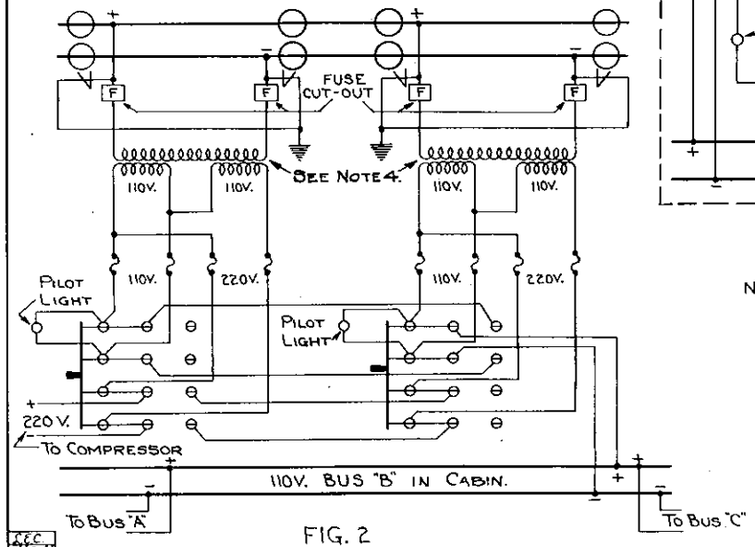

FIG. 2

NOTE:-

1. AUTOMATIC CIRCUIT BREAKERS OF A TYPE APPROVED BY CHIEF SIGNAL ENGINEER MAY BE USED IN SECONDARY SIDE OF LINE TRANSFORMERS IN LIEU OF FUSES.
2. FIG. 2 - SHALL BE USED WHERE AIR COMPRESSOR MOTOR IS OPERATED BY 220V. OBTAINED FROM SIGNAL POWER LINE.
3. FIG. 3 - SHALL BE USED ON LINES OF LIGHT TRAFFIC, WHERE IN THE OPINION OF THE SUPT. TELEG. & SIGNALS, ONE TRANSFORMER WILL BE SUFFICIENT FOR AN INTERLOCKING.
4. TRANSFORMERS AND THEIR SECTIONALIZING SWITCHES SHALL BE LOCATED ON ADJACENT POLES NEAREST CABIN.

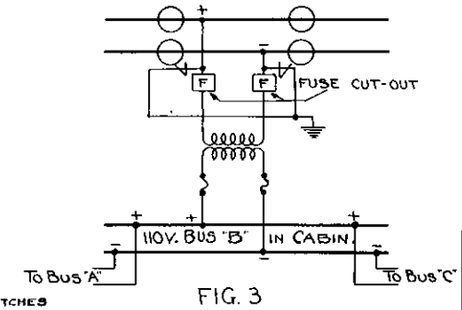

FIG. 3

REVISIONS.

3-22-37. ADDITIONAL CENTER SECTIONALIZING SWITCH PROVIDED AND NOTE 4 ADDED.
APPROVED:- A. H. Rudd

6-1-35. LINE TRANS. FIG. 1, FORMERLY LOCATED AT SIG. BRIDGES. FIG. 2 & NOTES 1 & 2 ADDED.
APPROVED: A. H. Rudd

1 SHEET

S-811

THE PENNSYLVANIA RAILROAD
TYPICAL
110 VOLT A. C. POWER SUPPLY FOR INTERLOCKINGS

OFFICE OF CHIEF SIGNAL ENGINEER, PHILA., PA., MAY 21, 1929.

NOT TO SCALE

Approved A. H. Rudd
Chief Signal Engineer

Approved
Chief Engineer

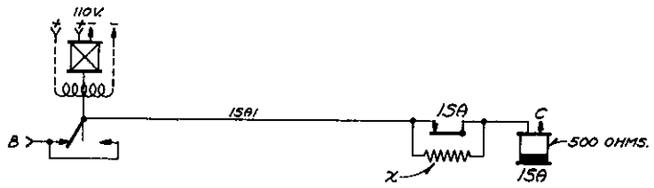

SLOW ACTING RELAY REPEATING 3 POSITION A.C. RELAY.

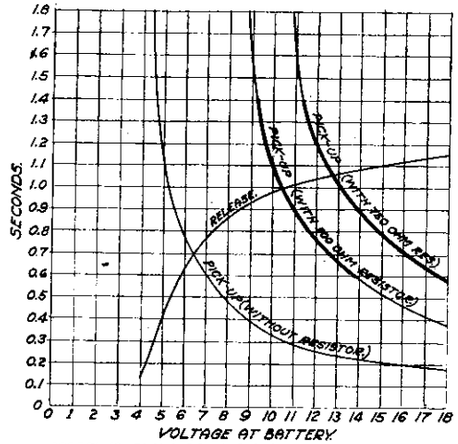

MODEL 13 SLOW-ACTING D.C. NEUTRAL RELAY.
500 OHMS, 4 FRONT-2 BACK CONTACTS-ROUND BASE.

FIG. 1.

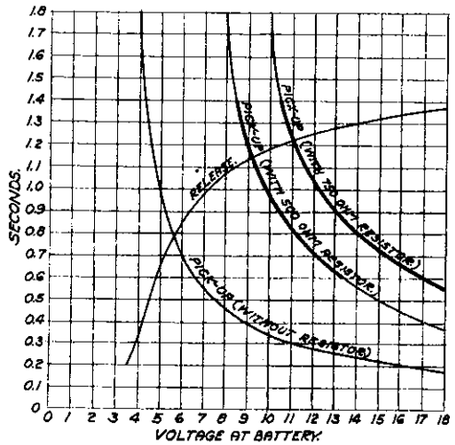

MODEL 13 SLOW-ACTING D.C. NEUTRAL RELAY.
500 OHMS, 4 FRONT-4 BACK CONTACTS-SQUARE BASE.

FIG. 2.

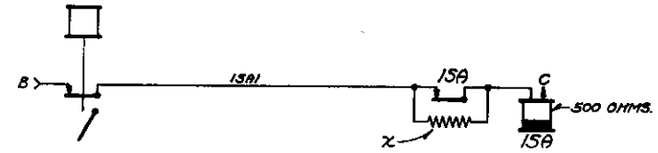

SLOW ACTING RELAY REPEATING D.C. POLARIZED RELAY.

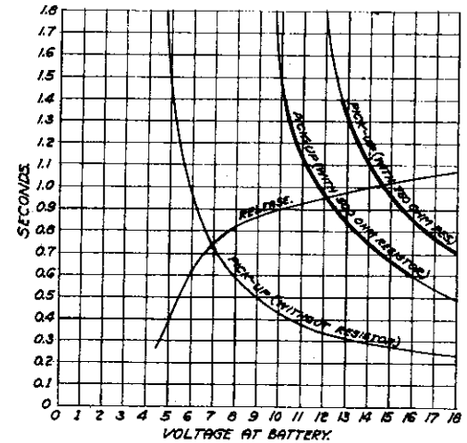

MODEL 13 SLOW-ACTING D.C. NEUTRAL RELAY
500 OHMS, 6 CONTACTS - SQUARE BASE.

FIG. 3

NOTE:-

1. RESISTANCE OF RESISTOR "X" SHALL BE DETERMINED BY CURVES, FIGURES 1, 2 & 3, THE RESISTOR SELECTED BEING OF SUCH VALUE THAT THE RETARDED PICK-UP FALLS ON THE CURVE BETWEEN 0.6 AND 1.4 SECONDS, AS INDICATED BY HEAVY LINE, ALLOWANCE BEING MADE FOR VOLTAGE VARIATION.
2. CIRCUITS SHALL BE ARRANGED AS SHOWN WHERE IT IS DESIRABLE TO RETARD THE PICK-UP OF THE RELAY.
3. WHERE A RETARDED PICK-UP IS NOT REQUIRED RELAY CONTACT "15A" AND RESISTOR "X" SHALL BE OMITTED.
4. RESISTOR TO BE MOUNTED ON STANDARD PORCELAIN TERMINAL BLOCK 5132, PLAN S-513, AND SHALL HAVE THREE WATTS CONTINUOUS CAPACITY.

REVISIONS.

1 SHEET

S-812

THE PENNSYLVANIA RAILROAD
STANDARD
CONTROL CIRCUITS FOR
D. C. SLOW ACTING RELAYS

OFFICE OF CHIEF SIGNAL ENGINEER,
PHILA., PA., AUG. 2, 1928.

NOT TO SCALE

Approved
Chief Signal Engineer

Approved
Chief Engineer

J.P.H

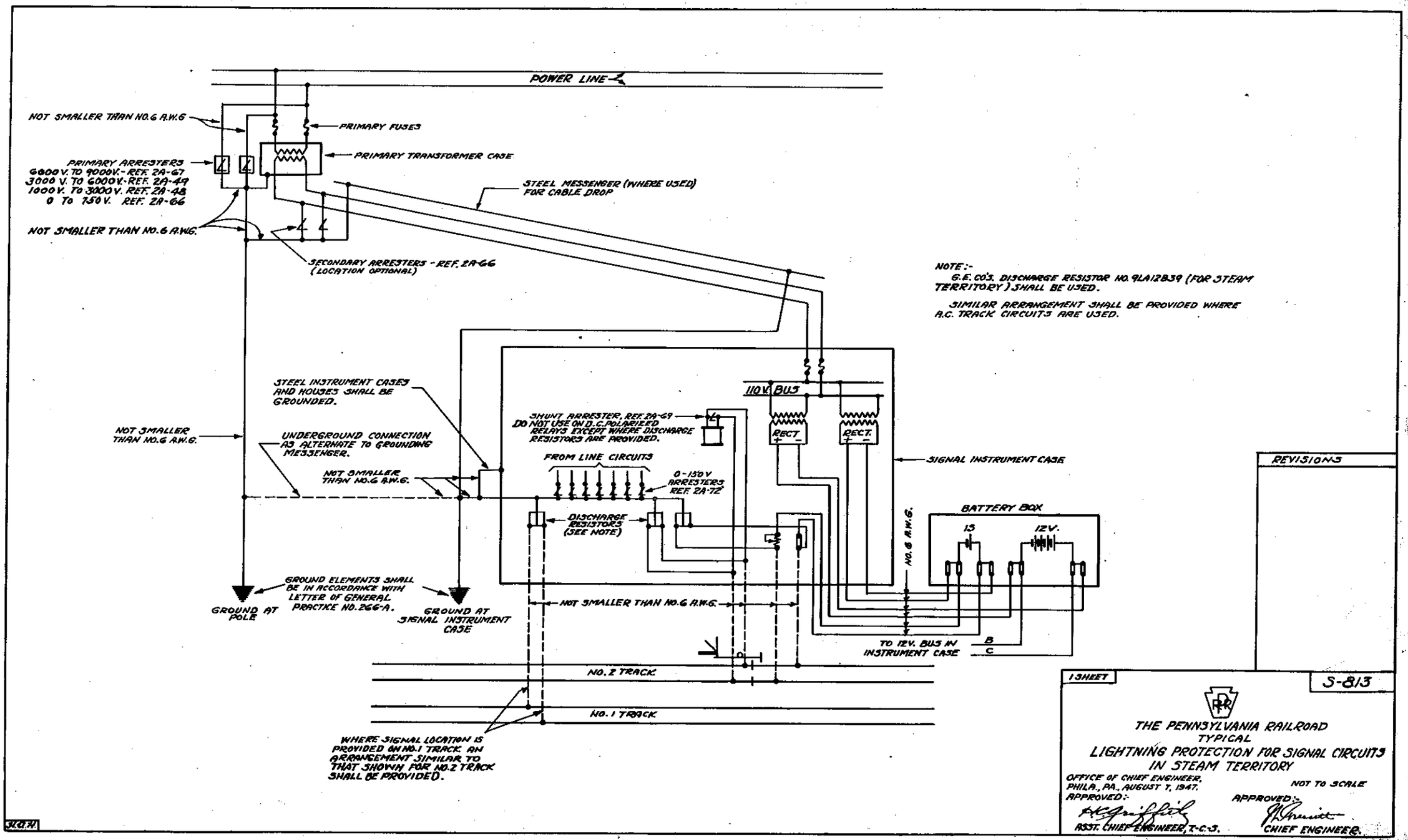
POWER LINE
NOT SMALLER THAN NO.6 A.W.G.
PRIMARY FUSES
PRIMARY ARRESTERS
6800 V. TO 9000V.-REF. 2A-67
3000 V. TO 6000V.-REF. 2A-49
1000 V. TO 3000V. REF. 2A-48
0 TO 150 V. REF. 2A-66
PRIMARY TRANSFORMER CASE
STEEL MESSENGER (WHERE USED) FOR CABLE DROP
NOT SMALLER THAN NO.6 A.W.G.
SECONDARY ARRESTERS - REF. 2A-66 (LOCATION OPTIONAL)
NOTE:-
G.E. CO'S. DISCHARGE RESISTOR NO. 9LA12839 (FOR STEAM TERRITORY) SHALL BE USED.
SIMILAR ARRANGEMENT SHALL BE PROVIDED WHERE A.C. TRACK CIRCUITS ARE USED.
STEEL INSTRUMENT CASES AND HOUSES SHALL BE GROUNDED.
NOT SMALLER THAN NO.6 A.W.G.
UNDERGROUND CONNECTION AS ALTERNATE TO GROUNDING MESSENGER.
NOT SMALLER THAN NO.6 A.W.G.
110V. BUS
SHUNT ARRESTER, REF. 2A-69
DO NOT USE ON D.C. POLARIZED RELAYS EXCEPT WHERE DISCHARGE RESISTORS ARE PROVIDED.
RECT.
RECT.
FROM LINE CIRCUITS
0-150 V ARRESTERS REF. 2A-72
SIGNAL INSTRUMENT CASE
DISCHARGE RESISTORS (SEE NOTE)
NO. 8 A.W.G.
BATTERY BOX
13
12V.
GROUND ELEMENTS SHALL BE IN ACCORDANCE WITH LETTER OF GENERAL PRACTICE NO. 266-A.
GROUND AT POLE
GROUND AT SIGNAL INSTRUMENT CASE
NOT SMALLER THAN NO.6 A.W.G.
TO 12V. BUS IN INSTRUMENT CASE
B
C
NO. 2 TRACK
NO. 1 TRACK
WHERE SIGNAL LOCATION IS PROVIDED ON NO.1 TRACK AN ARRANGEMENT SIMILAR TO THAT SHOWN FOR NO.2 TRACK SHALL BE PROVIDED.
REVISIONS
1 SHEET
S-813
THE PENNSYLVANIA RAILROAD
TYPICAL
LIGHTNING PROTECTION FOR SIGNAL CIRCUITS IN STEAM TERRITORY
OFFICE OF CHIEF ENGINEER,
PHILA., PA., AUGUST 7, 1947.
NOT TO SCALE
APPROVED:-
ASST. CHIEF ENGINEER, T.C.S.
APPROVED:-
CHIEF ENGINEER.

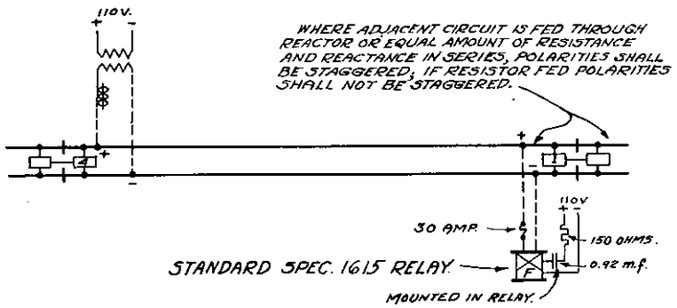

FOR USE ON TRACK CIRCUITS BETWEEN 3000' & 6000'.

FIG. 1.

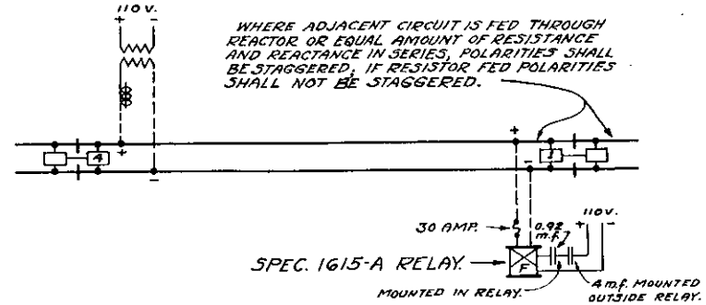

FOR USE ON TRACK CIRCUITS IN AUTOMATIC TERRITORY UP TO 3000'.

FIG. 2.

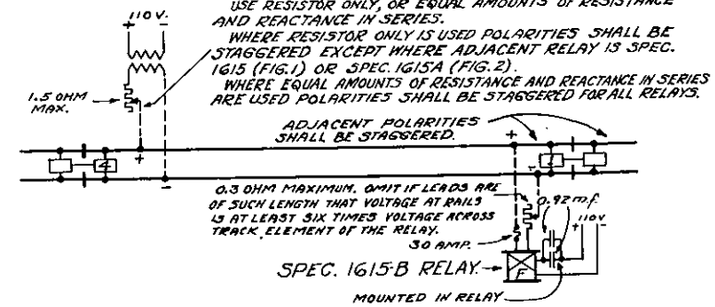

FOR USE ON INTERLOCKING TRACK CIRCUITS UP TO 2000'.
FOR USE ONLY WHEN SPEC. 1615 RELAYS ARE IN STOCK.
WHEN NEW RELAYS MUST BE OBTAINED USE SPEC. 2197, FIG. 6.

FIG 3.

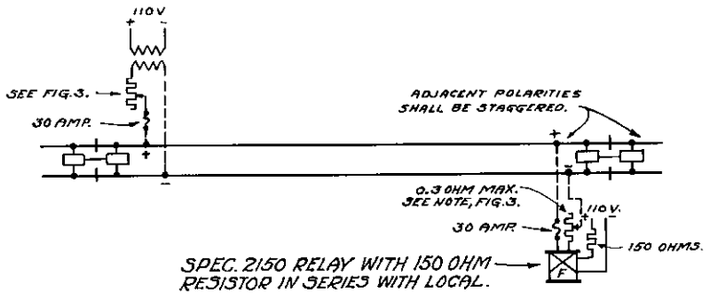

FOR USE IN NEW YORK DIV. A.C.-D.C. PROPULSION TERRITORY WHERE LOW IMPEDANCE BONDS ARE USED ON SHORT INTERLOCKING TRACK CIRCUITS UP TO 500'.

FIG. 4.

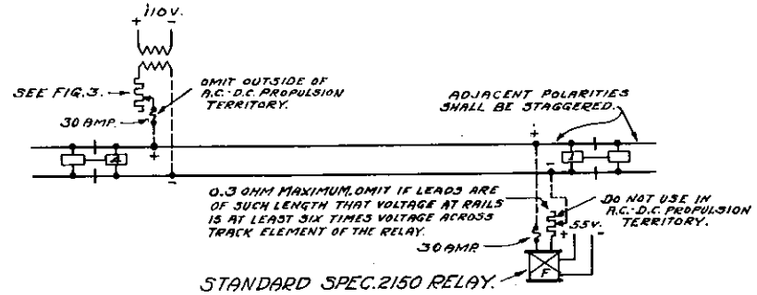

FOR USE ON INTERLOCKING TRACK CIRCUITS UP TO 3500'.
FOR USE IN NEW YORK DIV. A.C.-D.C. PROPULSION TERRITORY ON TRACK CIRCUITS BETWEEN 500' & 3500'.

FIG. 5.

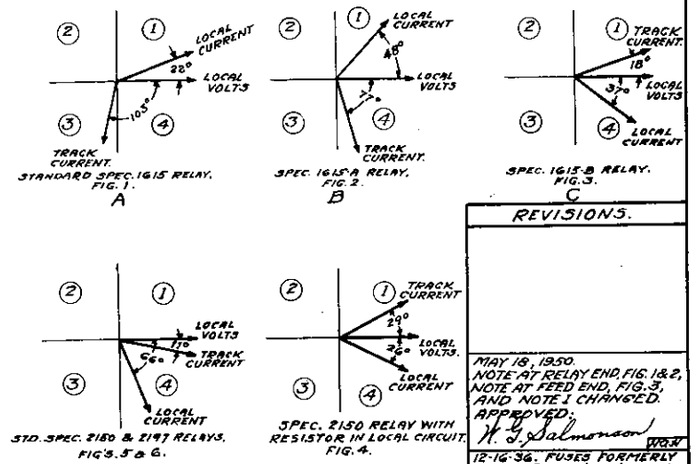

IDEAL PHASE RELATIONS

FIG. 7.

NOTE:-

1. TRACK CIRCUIT POLARITIES ARE ARRANGED TO PROVIDE BROKEN DOWN INSULATING RAIL JOINT PROTECTION. TESTS SHALL BE MADE IN ACCORDANCE WITH PARAGRAPH 35, C.E. 232, TO INSURE THAT SUCH PROTECTION IS OBTAINED. WHERE RELAY INSTALLED IN ACCORDANCE WITH FIGURES 2 OR 3 FAILS TO COMPLY WITH THE TESTS, RELAY SPEC. 2197, FIG. 6, SHALL BE SUBSTITUTED TO OBTAIN COMPLIANCE.
2. UNLESS OTHERWISE SPECIFIED ARRANGEMENTS SHOWN ARE FOR A.C. PROPULSION TERRITORY ONLY.

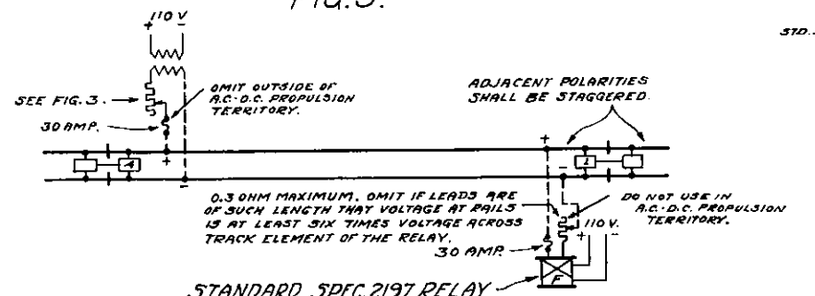

FOR USE ON INTERLOCKING TRACK CIRCUITS UP TO 3500'.
FOR USE IN NEW YORK DIV. A.C.-D.C. PROPULSION TERRITORY ON TRACK CIRCUITS BETWEEN 500' & 3500'.
MAY BE USED ON SAME TYPE OF TRACK CIRCUIT AS SPEC. 1615A (FIG. 2) AND SPEC. 1615B (FIG. 3) EXCEPT THE RANGE OF LENGTH IS UP TO 3500'.

FIG. 6.

REVISIONS.

MAY 18, 1950.
NOTE AT RELAY END, FIG. 1 & 2, NOTE AT FEED END, FIG. 3, AND NOTE 1 CHANGED.
APPROVED: H. G. Salmonson

12-16-36. FUSES FORMERLY SHOWN 20 AMP'S. NOTE IN FIG. 2 CHANGED. FIG'S. 6 & 7 FORMERLY 7 & 8, FIG. 6 BEING REMOVED.
APPROVED: A. H. Rudd

1 SHEET

S-816

THE PENNSYLVANIA RAILROAD
STANDARD
APPLICATION OF CENTRIFUGAL TRACK RELAYS ON DOUBLE RAIL TRACK CIRCUITS

OFFICE OF CHIEF SIGNAL ENGINEER.
PHILA., PA., OCT. 31, 1936.

NOT TO SCALE

APPROVED: A. H. Rudd
CHIEF SIGNAL ENGINEER.

APPROVED: W. Sheafer
CHIEF ENGINEER.

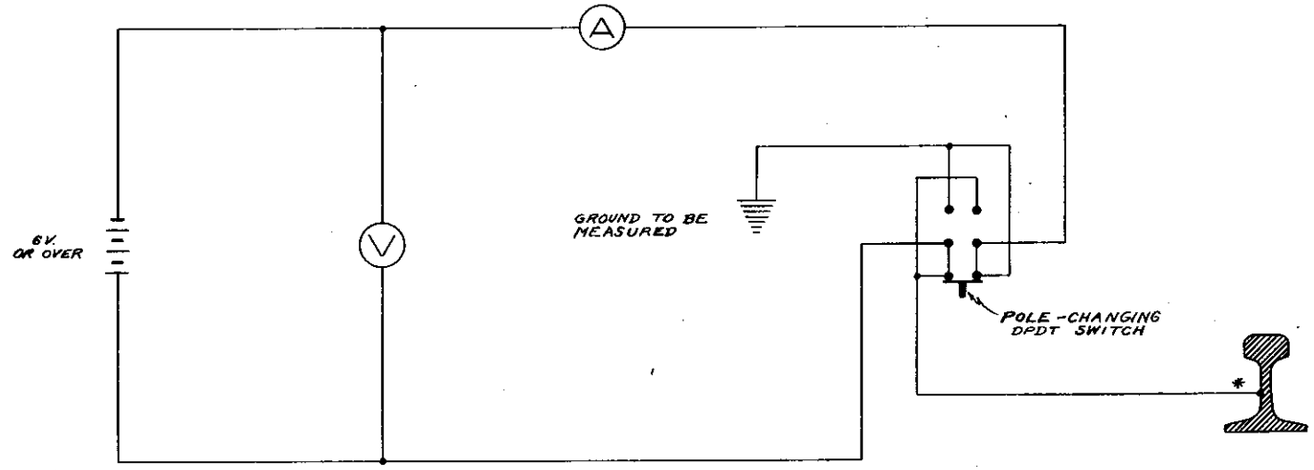

RESISTANCE OF GROUND EQUALS AVERAGE READING OF VOLTMETER DIVIDED BY AVERAGE READING OF AMMETER.

NOTE:- * CONNECTION TO RAIL MAY BE MADE BY MEANS OF A CLAMP OR TO EXISTING FEED OR RELAY WIRES.

DO NOT USE EXCEPT WHEN RELAY IS PICKED UP AND WHEN NO TRAIN IS APPROACHING SIGNAL. ALSO TRACK CIRCUIT SHOULD BE AT LEAST 2000 FT. LONG TO INSURE THAT RAIL BE OF LOW ENOUGH RESISTANCE TO BE SATISFACTORY.

REVISIONS

1 SHEET

S-817

THE PENNSYLVANIA RAILROAD

METHOD OF MEASURING RESISTANCE OF MADE GROUND

OFFICE OF ASST. CHIEF ENGINEER-SIGNALS

NOT TO SCALE

PHILA., PA., JULY 17, 1937

APPROVED N.C. Brunton
ASST. CHIEF ENGINEER-SIGNALS

APPROVED W. Wiggins
CHIEF ENGINEER

W.C.M.
R.M.

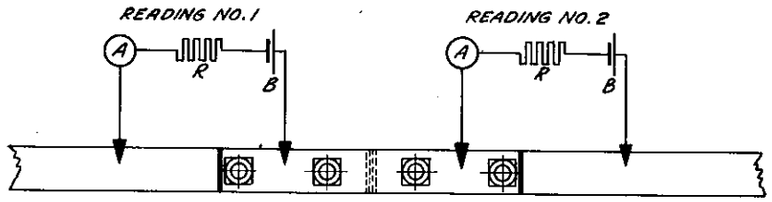

SWITCH ROD

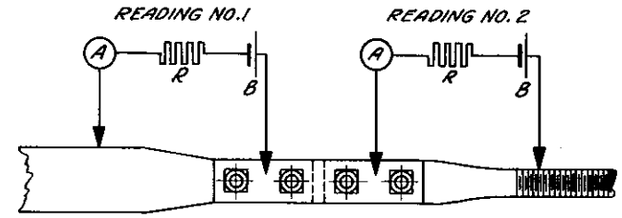

GAUGE ROD

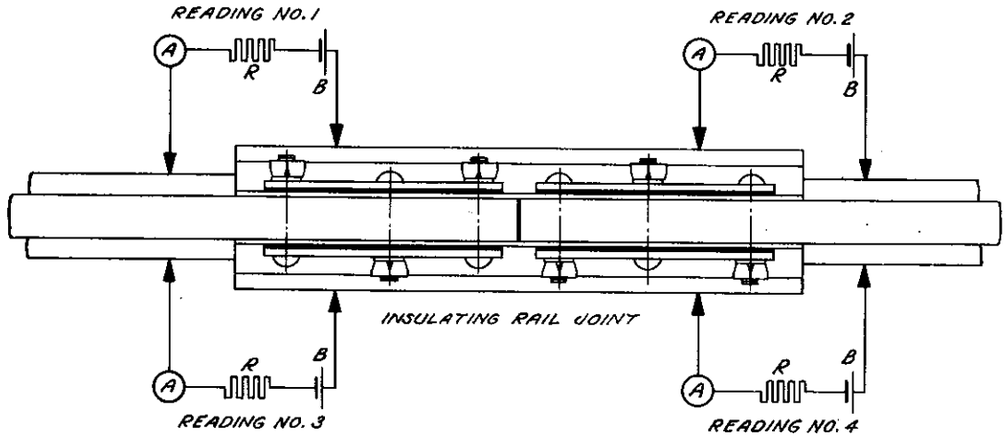

INSULATING RAIL JOINT

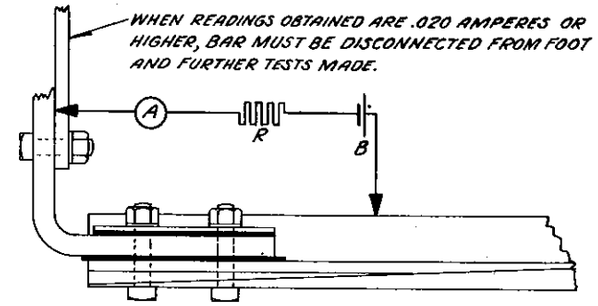

FRONT ROD - FOOT

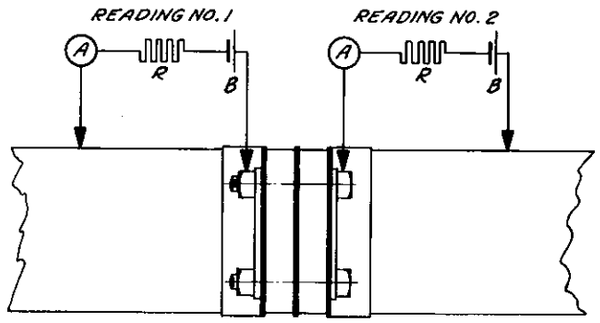

GAUGE PLATE

LEGEND

A = D.C. MILLI-AMMETER
B = 1 DRY CELL (APPROX. $1\frac{1}{2}$ VOLTS)
R = 4 TO 10 OHMS RESISTANCE (FOR LIMITING CURRENT FLOW IN CASE OF BROKEN DOWN INSULATION.)

NOTE:-

1. WHEN READINGS OBTAINED ARE .020 AMPERES OR HIGHER, INSULATION SHALL BE RENEWED, EXCEPT FOR INSULATING RAIL JOINTS.
2. ON INSULATING RAIL JOINTS, WHEN TOTAL READINGS, AS DETERMINED FROM NOTE 3, ARE .020 AMPERES OR HIGHER, THE INSULATING RAIL JOINT SHALL BE TAKEN APART AND RUST THOROUGHLY CLEANED WITH A WIRE BRUSH AND DEFECTIVE INSULATION AND INSULATING BUSHINGS RENEWED.
3. TO DETERMINE TOTAL READING ON INSULATING RAIL JOINT ADD THE HIGHER CURRENT READING OBTAINED FROM READING NO. 1 AND NO. 2 TO THE HIGHER CURRENT READING OBTAINED FROM READING NO. 3 AND NO. 4.
4. ON MECHANICALLY OPERATED SWITCHES - WHEN READINGS OBTAINED ARE .020 AMPERES OR HIGHER, PIPE LINE MUST BE DISCONNECTED FROM SWITCH AND FURTHER READINGS TAKEN.
5. FLEXIBLE METALLIC CONDUIT CONNECTED TO ANY GROUNDED APPARATUS, SUCH AS E.P. VALVES, SWITCH MECHANISMS ETC., SHALL BE FREE FROM METALLIC CONTACT WITH MECHANISM WHILE TEST IS BEING MADE.

REVISIONS

1 SHEET

S-818

THE PENNSYLVANIA RAILROAD

TRACK INSULATION TESTS

OFFICE OF ASSISTANT CHIEF ENGINEER-SIGNALS
PHILA., PA., JAN. 12, 1938.

NOT TO SCALE

Approved N. L. Stanton
Assistant Chief Engineer-Signals

Approved W. D. Wiggins
Chief Engineer

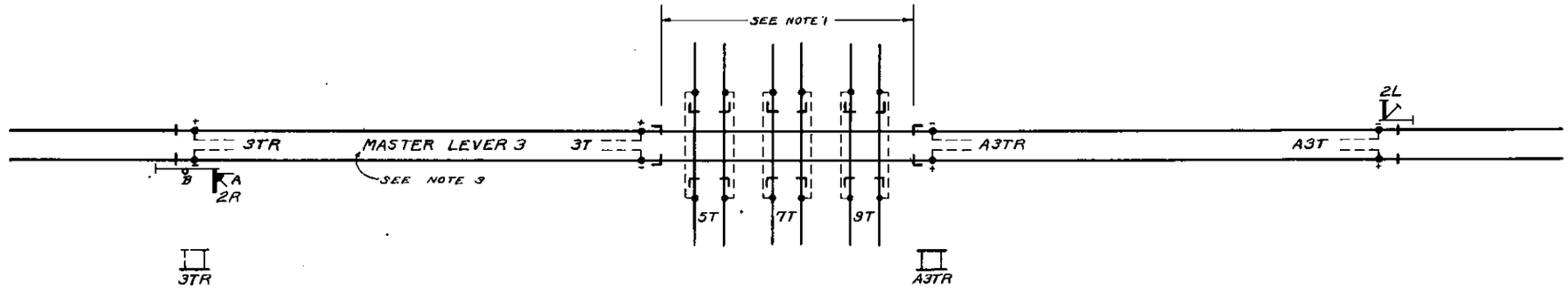

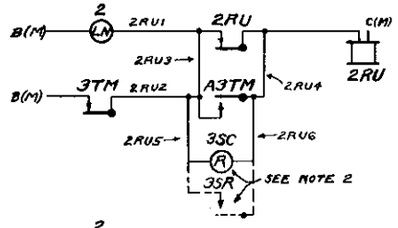

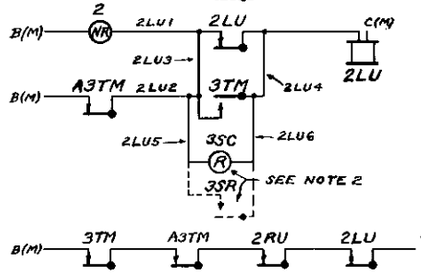

INCLUDE ALL TRAP CIRCUITS ON OTHER ROAD AND TRACK CIRCUITS BACK TO HOLDING SIGNALS FOR CONFLICTING MOVEMENTS.

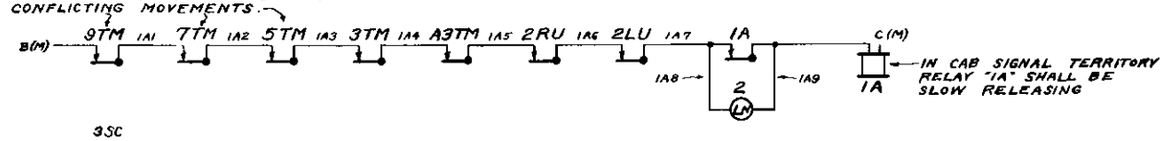

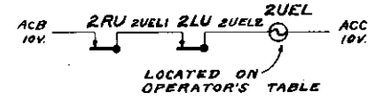

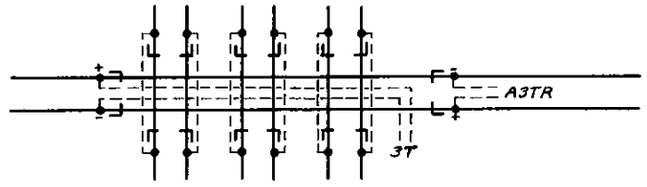

CAB SIGNAL TERRITORY

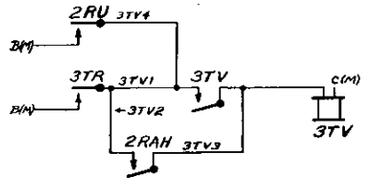

CONTROL OF 3TV IN CAB SIGNAL TERRITORY WHERE TRAP CIRCUITS ARE PROVIDED

NOTE:-

1. TRAP CIRCUITS SHALL BE PROVIDED WHERE LENGTH OF DEAD SECTION AT CROSSING EXCEEDS THIRTY FEET.
2. STANDARD CIRCUIT CONTROLLER WITH LATCH (3SC) SHALL BE PROVIDED AND SEALED IN NORMAL POSITION OR A CLOCKWORK TIME RELEASE WITHOUT LATCH USED TO MANUALLY RESTORE STICK RELAYS 2RU AND 2LU. CIRCUIT CONTROLLER OR TIME RELEASE MUST NOT BE USED UNTIL OPERATOR HAS DETERMINED THAT CROSSING IS UNOCCUPIED.
3. WHERE DERAILS ARE PROVIDED ARRANGE CIRCUITS FOR LEVER LOCK SIMILAR TO THOSE SHOWN FOR MASTER LEVER 3.
4. WHERE ROUTE LOCKING IS REQUIRED CIRCUITS SHALL BE ARRANGED SO THAT ROUTE LOCKING IS EFFECTIVE WITH TRAIN ON "DEAD SECTION".

REVISIONS

1 SHEET

S-819

THE PENNSYLVANIA RAILROAD

TYPICAL

TRAP CIRCUITS

OFFICE OF CHIEF SIGNAL ENGINEER
PHILA., PA. MARCH 23, 1937

NOT TO SCALE

Approved: A. H. Reed, Chief Signal Engineer

Approved: M. Rigling, Chief Engineer

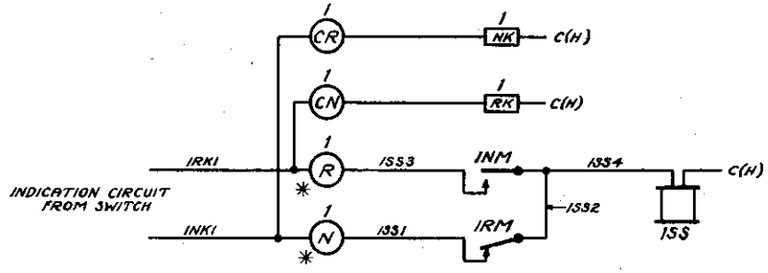

ELECTRO-MECHANICAL (U.S.& S. CO.)
SEE PLAN S-821
FIG. 1

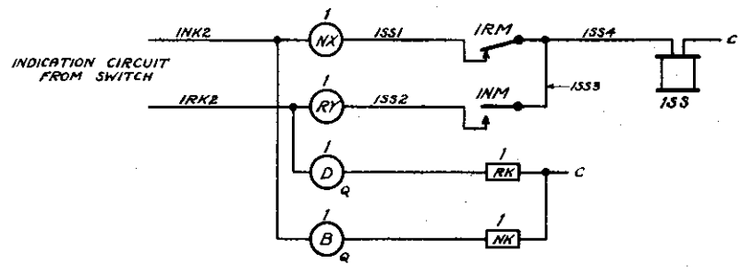

ELECTRO-PNEUMATIC MODEL 14 S.& L. MOVEMENT WITH STYLE "C" VALVE
SEE PLAN S-822, SH. 2
FIG. 2

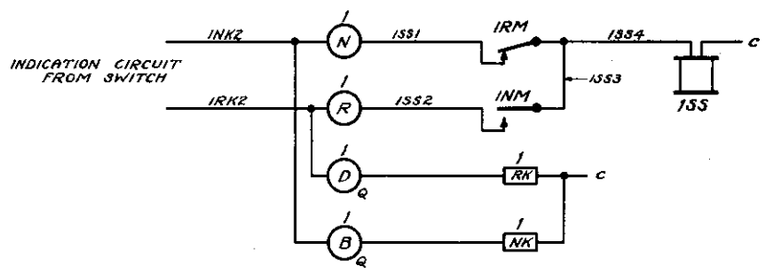

ELECTRO-PNEUMATIC MODEL 14 S.& L. MOVEMENT WITH OLD STYLE VALVE
SEE PLAN S-822, SH.3
FIG. 3.

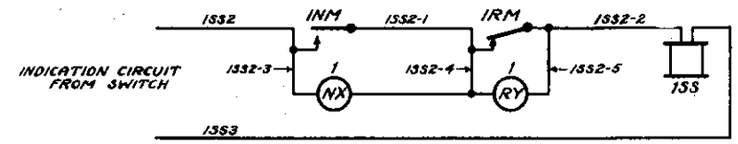

POLARIZED "SS" CONTROLS
SEE PLAN S-822, SHEETS 1,4,5 & 8.
" " S-823, " 1 & 2.
FIG. 4.

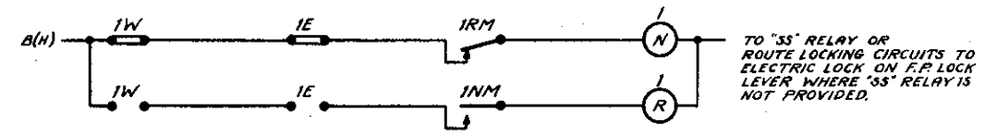

MECHANICAL
FIG. 5.

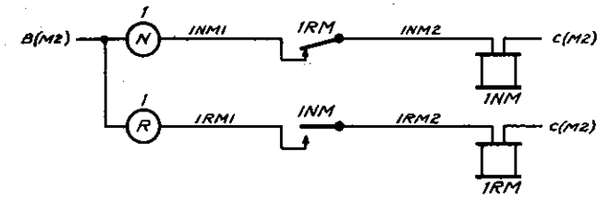

CONTROL CIRCUITS FOR
SWITCH LEVER REPEATING RELAYS
FIG. 6.

REVISIONS

1 SHEET

S-820

THE PENNSYLVANIA RAILROAD
TYPICAL
CIRCUITS FOR LEVER REPEATING RELAYS

OFFICE OF CHIEF SIGNAL ENGINEER,
PHILA., PA., MAY 19, 1931

NOT TO SCALE

Approved
Chief Signal Engineer

Approved
Chief Engineer

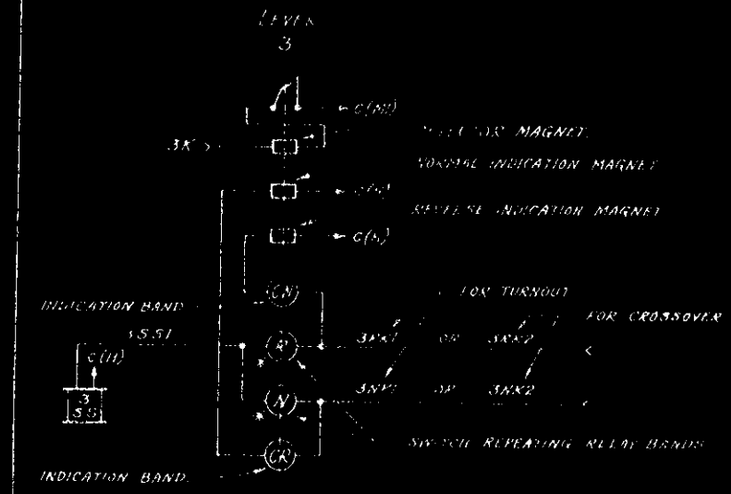

TYPE "P" & "S-8" (U.S. & S. Co.)

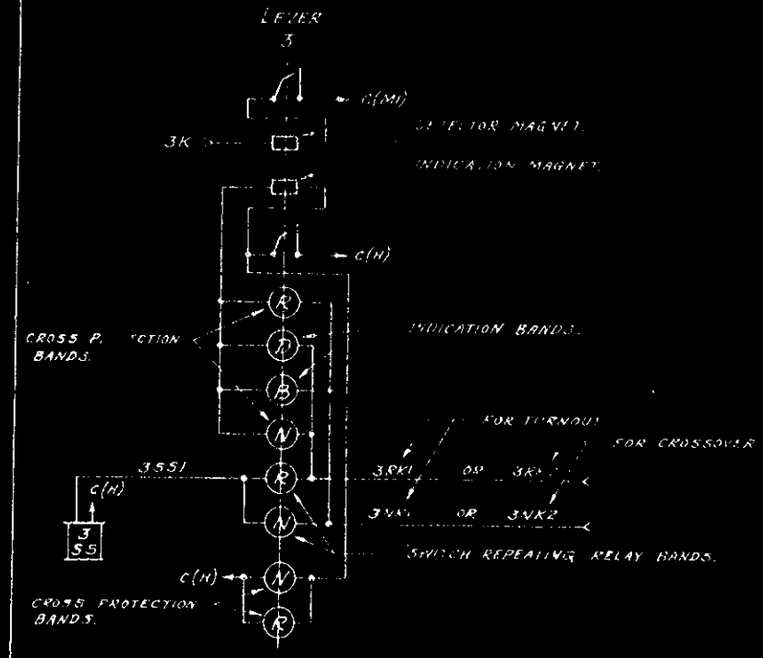

MODEL "2B" (G.R.S. Co.)

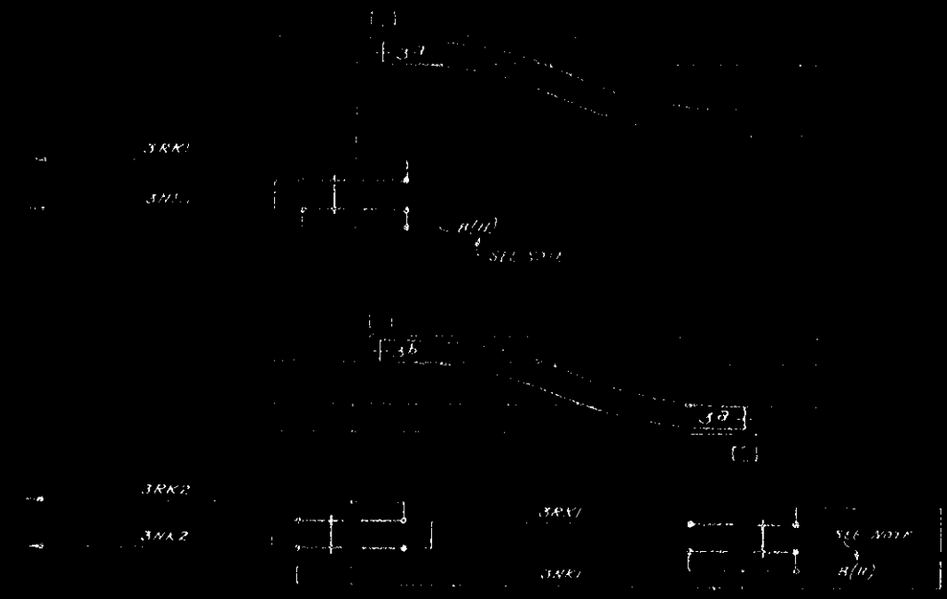

NOTE:—

THE "H" BATTERY MOST CONVENIENTLY LOCATED SHALL BE USED FOR EACH INDICATION CIRCUIT AND THE BATTERY USED SHALL BE INDICATED ON DETAIL CIRCUIT PLAN AT EACH

"DS" RELAY THUS: C(H) DS

* ON "S-8" LEVERS "L" & "N" CONTACTS SHALL BE DESIGNATED "NS" & "RS" AND SHALL BE SO ADJUSTED AS NOT TO BREAK WHILE THE LEVER IS MECHANICALLY LOCKED NORMAL OR REVERSED RESPECTIVELY BUT MUST BREAK BEFORE THE DETECTOR LOCKING TOOTH IS REACHED.

WIRES MARKED "C(NI)" & "C(RI)" SHALL BE CONNECTED DIRECT TO THEIR RESPECTIVE MAIN COMMON BUS.

REVISED.

SWITCH TRANSFORMER MODULE CONNECTED BY C.S.A. DOS TRACKS, INSTEAD OF SUPPLYING LOCK CONTACTS PROVIDED BY "DS" TRACKS.

AS ADVISED:

APPROVED:

REPRINT FROM PLAN S-821, 5 SHEETS, DATED 4-21-20.

1 SHEET

S-821

PENNSYLVANIA RAILROAD SYSTEM
STANDARD

CIRCUITS FOR ELECTRO-MECHANICAL SWITCH

OFFICE OF CHIEF SIGNAL ENGINEER
PHILA., PA., MAY 7, 1934

Approved

Chief Signal Engineer

Approved

Chief Engineer

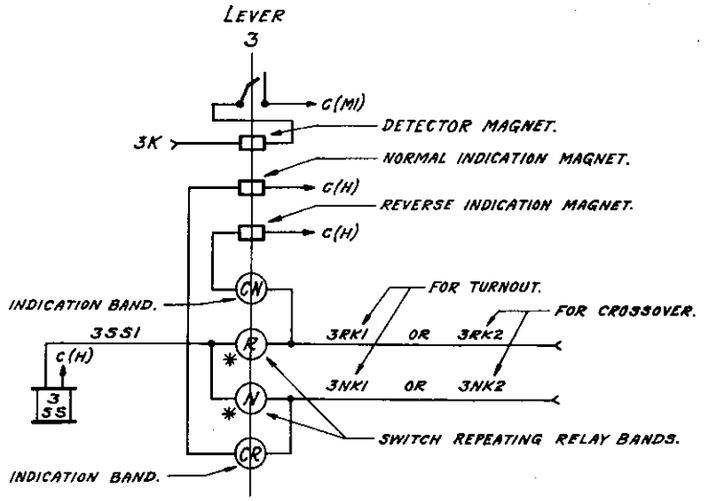

TYPE "P" & "S-8" (U.S. & S. Co.)

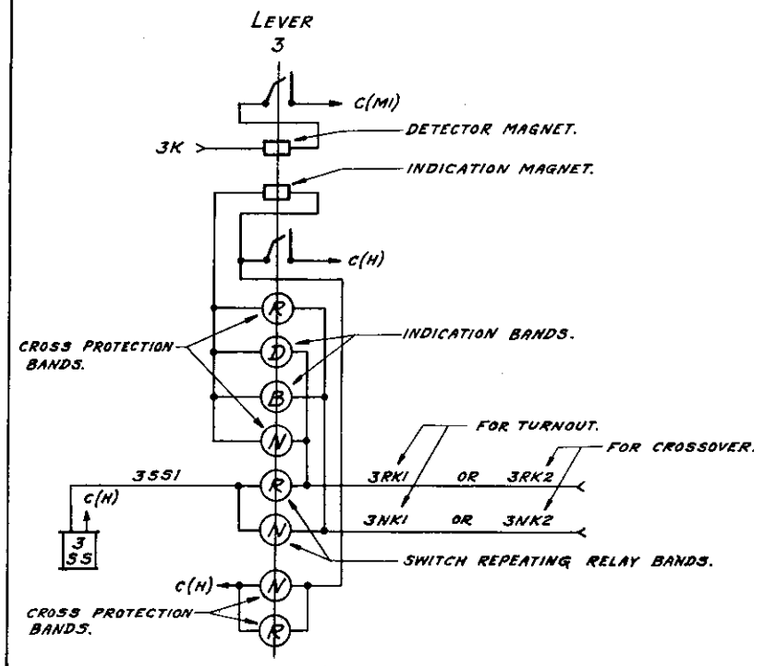

MODEL "2B" (G.R.S. Co.)

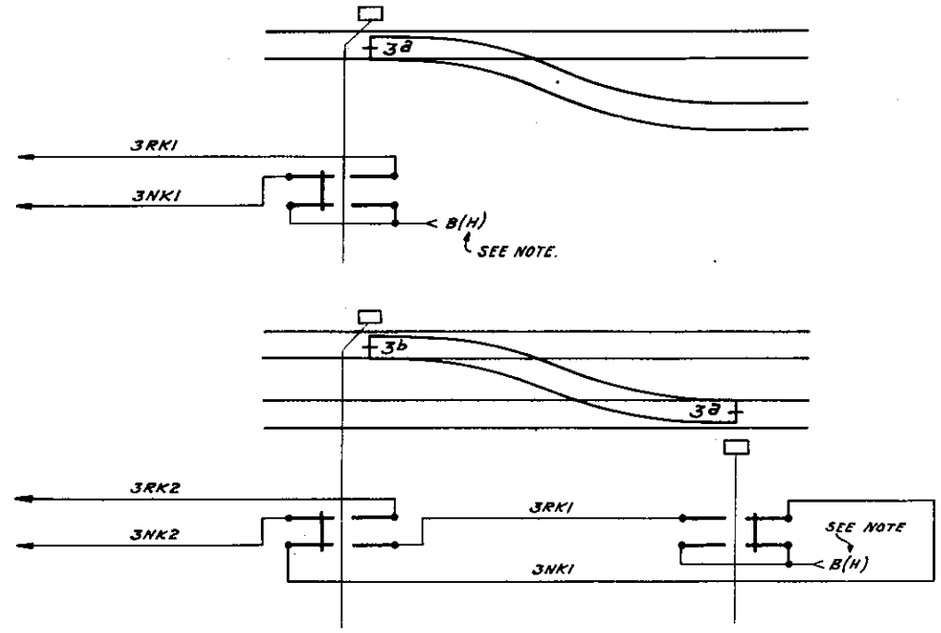

NOTE:-

THE "H" BATTERY MOST CONVENIENTLY LOCATED SHALL BE USED FOR EACH INDICATION CIRCUIT AND THE BATTERY USED SHALL BE INDICATED ON DETAIL CIRCUIT PLAN AT EACH "SS" RELAY THUS: — $\frac{C(H^a)}{\frac{3}{SS}}$

* ON "S-8" LEVERS "N" & "R" CONTACTS SHALL BE DESIGNATED "NS" & "RS" AND SHALL BE SO ADJUSTED AS NOT TO BREAK WHILE THE LEVER IS MECHANICALLY LOCKED NORMAL OR REVERSED RESPECTIVELY BUT MUST BREAK BEFORE THE DETECTOR LOCKING TOOTH IS REACHED.

WIRES MARKED "C(MI)" & "C(H)" SHALL BE CONNECTED DIRECT TO THEIR RESPECTIVE MAIN COMMON BUS.

REVISIONS.

5-7-24. ARRANGEMENT OF MAGNET COMMONS ON U.S.&S. CO'S. MACHINE CHANGED AND SEPARATE LATCH CONTACTS PROVIDED ON "2B" MACHINE. NOTES ADDED. APPROVED:- A.H. Rudd

REDRAWN FROM PLAN S-821, 5 SHEETS, DATED 4-23-20.

1 SHEET

S-821

PENNSYLVANIA RAILROAD SYSTEM
STANDARD

CIRCUITS FOR ELECTRO-MECHANICAL SWITCHES

OFFICE OF CHIEF SIGNAL ENGINEER
PHILA., PA., MAY 7, 1924.

NOT TO SCALE

Approved A.H. Rudd
Chief Signal Engineer

Approved
Chief Engineer

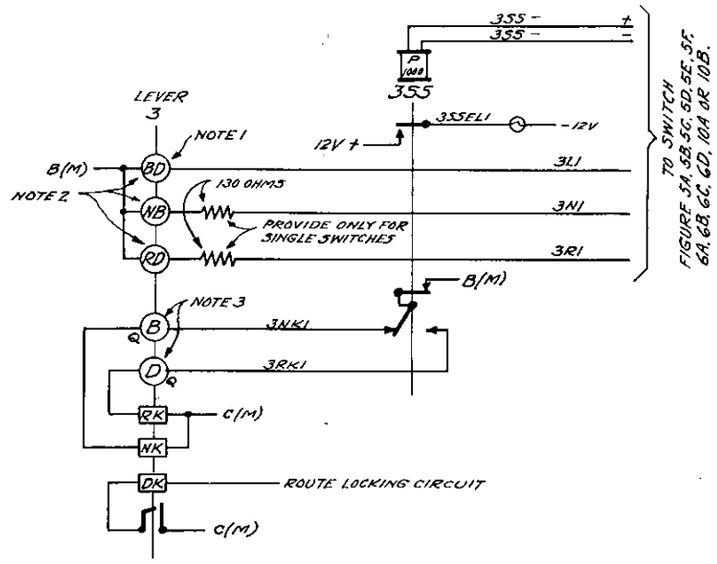

FIG. 1A

SEGMENTS AND QUADRANTS SHALL BE IN ACCORDANCE WITH THOSE LISTED ON SHEET NO. 3.

NOTE:

1. "BD" CONTACT SHALL BE OPEN WHEN MOVEMENT OF LEVER IS PREVENTED BY SWITCH LEVER DETECTOR LOCK.
2. SWITCH CONTROL BANDS SHALL BE PLACED ON LARGE SECTION OF ROLLER WHERE ANGULAR MOVEMENT OF ROLLER IS LESS THAN NINETY (90) DEGREES.
3. Q = QUICK SWITCH.
4. EACH SINGLE SWITCH, CROSSOVER OR DOUBLE SLIP SWITCH OPERATED BY ONE LEVER, SHALL HAVE AN INDIVIDUAL COMMON CONNECTION TO COMMON BUS IN NEAREST INSTRUMENT CASE.
5. A TURNOUT AND DERAIL SHALL BE OPERATED THE SAME AS A CROSSOVER.

LEVER - CONTROL AND INDICATION CIRCUITS

STYLE A1 OR A5 SWITCH & LOCK MOVEMENTS WITH STYLE C VALVES

REVISIONS

SUPERSEDES LEVER CONTROL AND INDICATION CIRCUITS FORMERLY SHOWN ON S-822, SH.1 DATED 7-18-28, SH.8 DATED 1-10-31 AND SHTS. 15, 16, 17, 18, 19 & 20 DATED 8-15-34.

SHEET 1 OF 15

S-822

THE PENNSYLVANIA RAILROAD
STANDARD

CIRCUITS FOR ELECTRO-PNEUMATIC SWITCHES

OFFICE OF CHIEF ENGINEER,
PHILA., PA., MAY 24, 1950.

APPROVED: W. G. Salmonson
ASST. CHIEF ENGINEER-SIGNALS

APPROVED: J. Pennell
CHIEF ENGINEER

H.G.R.

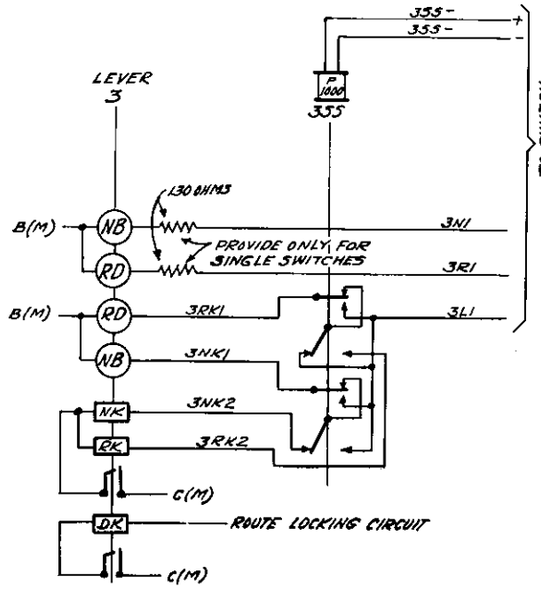

MODEL 12 OR STYLE DP14 POLAR INDICATION RELAYS DO NOT USE FOR NEW WORK OR RENEWALS.

FIG. 2A

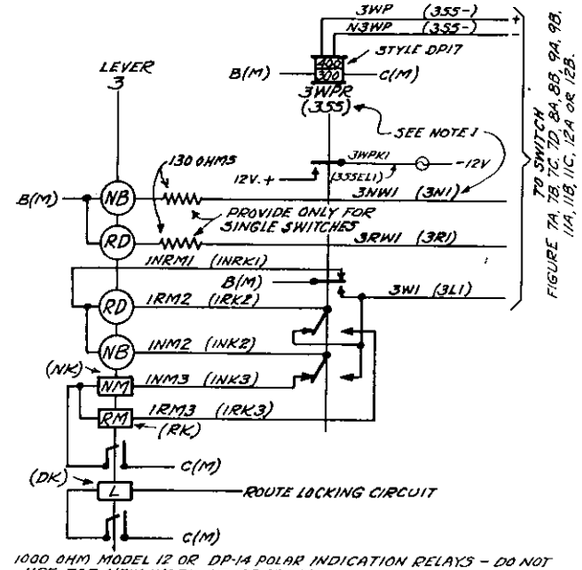

1000 OHM MODEL 12 OR DP-14 POLAR INDICATION RELAYS – DO NOT USE FOR NEW WORK OR RENEWALS.
STYLE DP-17 POLAR INDICATION RELAYS – FOR ALL NEW WORK AND RENEWALS, EXCEPT WHERE PLUG-IN RELAYS ARE PROVIDED.

FIG. 2B

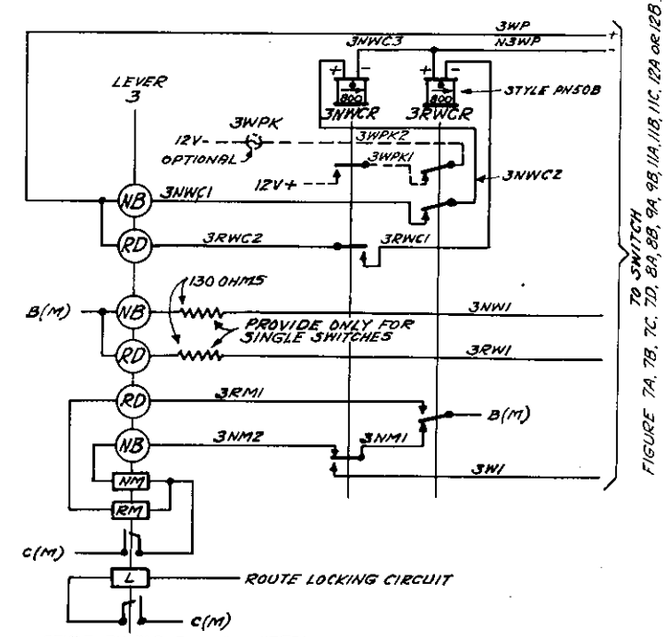

STYLE PN-50B BIASED NEUTRAL PLUG-IN TYPE INDICATION RELAYS

FIG. 2C

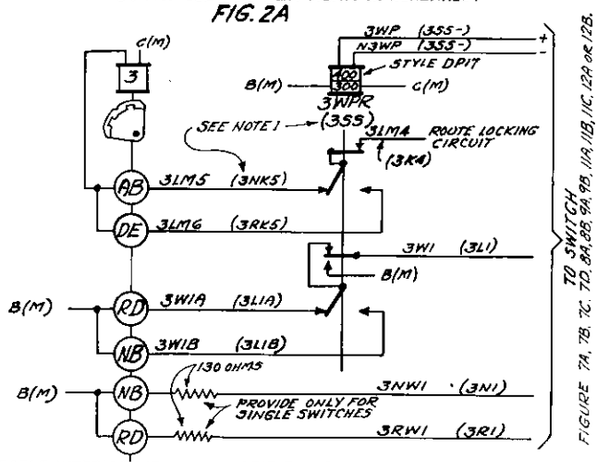

TABLE INTERLOCKER – STYLE DP17 POLAR INDICATION RELAY

FIG. 2D

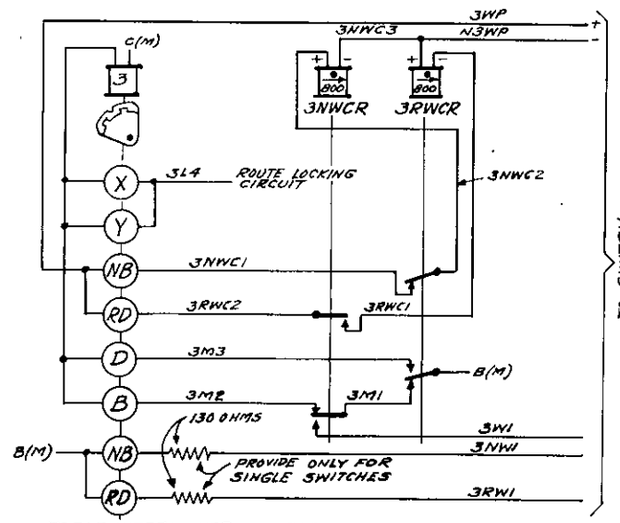

TABLE INTERLOCKER – PN-50B BIASED NEUTRAL RELAYS

FIG. 2E

NOTE:
1. A.A.R. CIRCUIT NOMENCLATURE USED FOR DESIGNATING INSTRUMENTS IN FIGS. 2B AND 2D. FORMER P.R.R. CIRCUIT NOMENCLATURE AND WIRE NUMBERS SHOWN IN PARENTHESIS.

LEVER-CONTROL AND INDICATION CIRCUITS

STYLE A1 OR A5 SWITCH AND LOCK MOVEMENTS WITH STYLE CP VALVES (QUICK SWITCH OMITTED)

MAINTAINER'S RESET FOR POINT DETECTOR OR WHERE NO POINT DETECTOR IS PROVIDED.

SEGMENTS AND QUADRANTS FOR NORMAL INDICATION (NM OR NK), REVERSE INDICATION (RM OR RK) AND DETECTOR LOCK (L OR DK) SHALL BE AS FOLLOWS:

SEGMENT		QUADRANT	TYPE OF MACHINE
INDICATION NM OR NK - RM OR RK	DETECTOR L OR DK		
142 - 8316	138 - 8316	89 - 8349	MODEL 14, TYPE F14 & STYLE P5
165 - 8316	137 - 8316	107 - 8349	STYLE S8
143 - 8316	137 - 8316	54 - 8349	STYLE P3
159 - 8316	72 - 8316	6 - 8349	TYPE F & OLD STYLE E.P.
159 - 8316	72 - 8316	54 - 8349	STYLE P & S7
143 - 8316	137 - 8316	6 - 8349	TYPE F13 & MODEL 13E.P.

USE LATCH PCE. NO. 544/3, SH. 23-8711 WITH SEGMENT 142-8316
" " " " 49820, SH. 19-8711 " SEGMENTS 143-8316 AND 165-8316
" " " " 3608, SH. 7-8711 " SEGMENT 159-8316

REVISIONS

FIGS. 2A, 2B & 2D SUPERSEDES LEVER CONTROL & INDICATION CIRCUITS FORMERLY SHOWN ON S-822, SH. 4 DATED 6-25-29 AND REVISED 9-27-48; SH. 5 DATED 10-30-29 AND REVISED 4-14-32, SH. 9 DATED 5-31-32 & SHTS. 10, 11, 12 & 13 DATED 8-15-34. FIGS. 2C & 2E ADDED.

SHEET 2 OF 15

S-822

THE PENNSYLVANIA RAILROAD
STANDARD

CIRCUITS FOR ELECTRO-PNEUMATIC SWITCHES

OFFICE OF CHIEF ENGINEER,
PHILA., PA., MAY 24, 1950.

APPROVED: W. G. Salmonson
ASST. CHIEF ENGINEER-SIGNALS

APPROVED: J. Pomeroy
CHIEF ENGINEER

3034

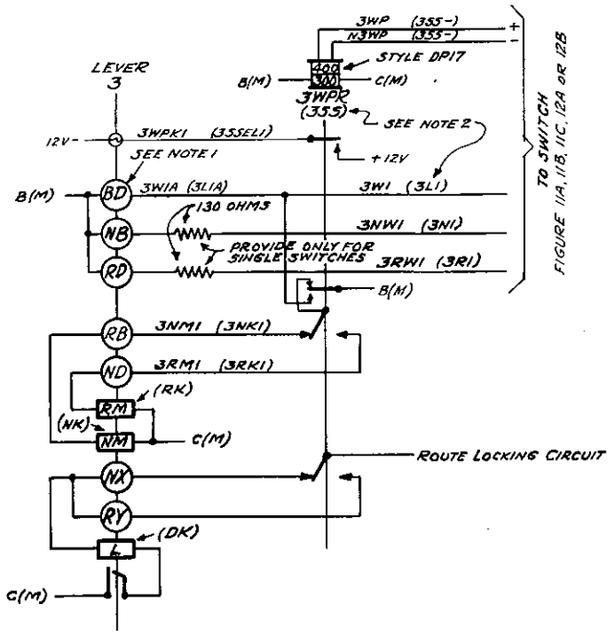

USING DP-17 POLAR RELAYS

FIG. 3A

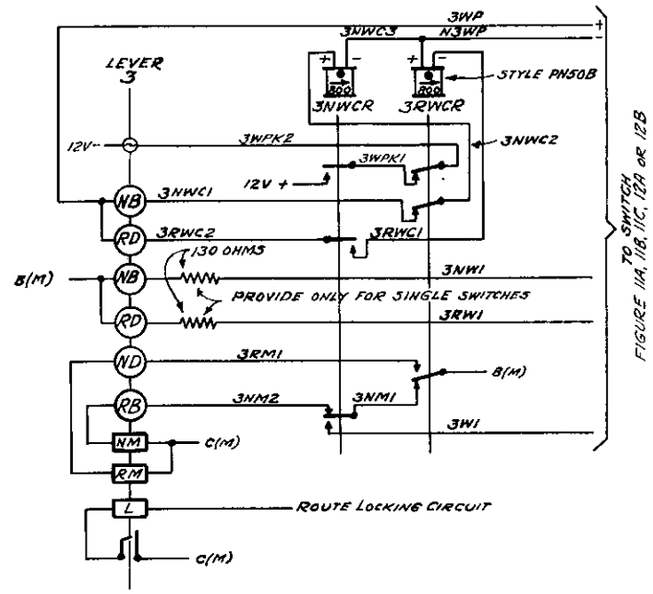

USING STYLE PN-50B PLUG-IN TYPE RELAYS.

FIG. 3B

NOTE:

1. "BD" SHALL BE OPEN WHEN MOVEMENT OF LEVER IS PREVENTED BY SWITCH LEVER DETECTOR LOCK.
2. A.A.R. CIRCUIT NOMENCLATURE USED FOR DESIGNATING INSTRUMENTS. FORMER P.R.R. CIRCUIT NOMENCLATURE AND WIRE NUMBERS SHOWN IN PARENTHESIS.

REVISIONS

SEGMENTS AND QUADRANTS FOR NORMAL INDICATION (NM), REVERSE INDICATION (RM) AND DETECTOR LOCK (L) SHALL BE AS FOLLOWS:-

SEGMENT		QUADRANT	TYPE OF MACHINE
INDICATION (NM OR RM)	DETECTOR (L)		
151 - 8316	138 - 8316	89 - 8349	MODEL 14, TYPE F14 & STYLE P5
166 - 8316	137 - 8316	107 - 8349	STYLE S8
152 - 8316	137 - 8316	54 - 8349	STYLE P3
208 - 8316	72 - 8316	6 - 8349	TYPE F OR OLD STYLE E.P.
208 - 8316	72 - 8316	54 - 8349	STYLE P OR S7
152 - 8316	137 - 8316	6 - 8349	TYPE F13 & MODEL 13 E.P.

REFERENCES 151-8316, 138-8316, 89-8349, ETC., ARE U.S.&S.Co. DRAWING NUMBERS.

USE LATCH PCE. NO. 54413, SH. 23-8711 WITH SEGMENT 151-8316
" " " " 49820, SH. 19-8711 " SEGMENTS 152-8316 AND 166-8316
" " " " 3996, SH. 1-8711 " SEGMENT 208-8316

LEVER - CONTROL AND INDICATION CIRCUITS

FOR USE WHERE STYLE A5 MOVEMENTS WITH CP VALVES ARE PROVIDED WITH LEVER RESTORE FOR POINT DETECTOR

SHEET 3 OF 15

S-822

THE PENNSYLVANIA RAILROAD
STANDARD

CIRCUITS FOR ELECTRO-PNEUMATIC SWITCHES

OFFICE OF CHIEF ENGINEER,
PHILA., PA., MAY 24, 1930.

APPROVED: H. G. Salmonson
ASST. CHIEF ENGINEER - SIGNALS

APPROVED: W. Greenough
CHIEF ENGINEER

SIGN.

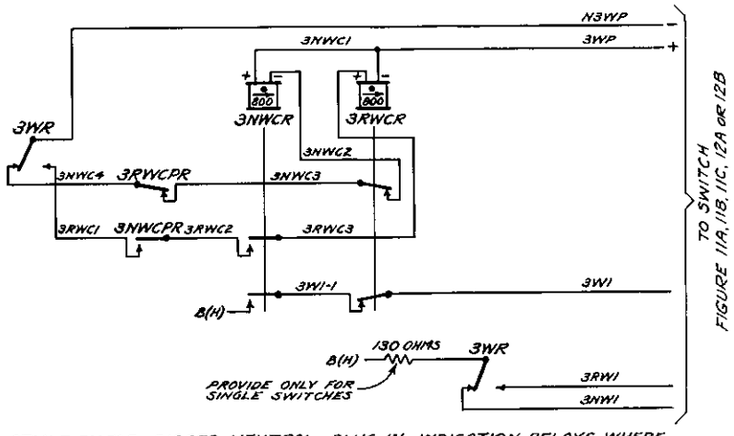

STYLE PN50B BIASED NEUTRAL PLUG-IN INDICATION RELAYS WHERE SWITCH IS CONTROLLED FROM C.T.C. FIELD STATION OR WHERE ALL RELAY DIRECT WIRE CONTROL IS PROVIDED.

FIG. 4A

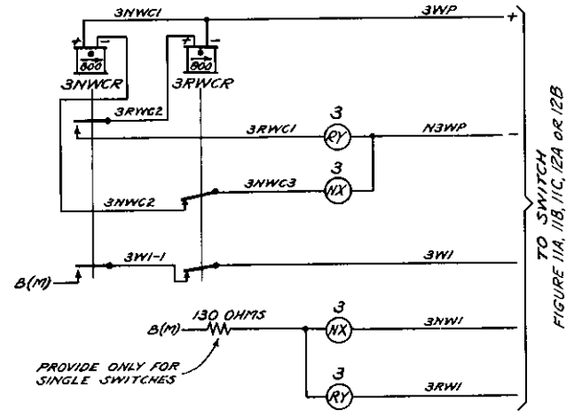

FOR USE WHERE SWITCH IS CONTROLLED FROM CONVENTIONAL TYPE MACHINE AND INDICATION MAGNETS ARE OMITTED.

FIG. 4C

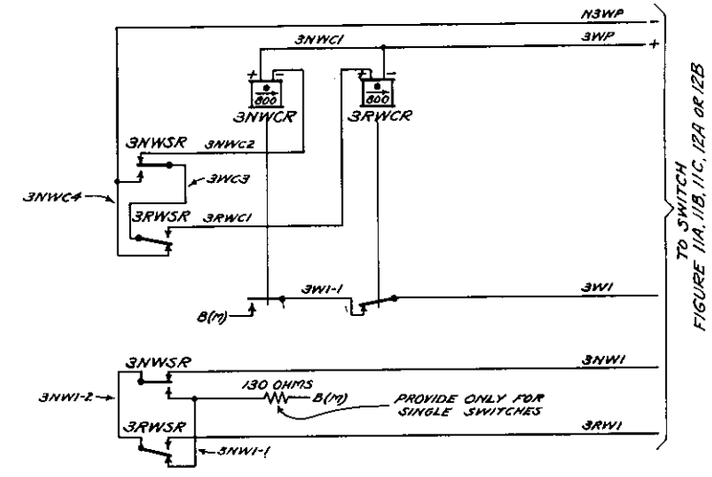

FOR USE WHERE SWITCH IS CONTROLLED FROM ROUTE TYPE MACHINE

FIG. 4D

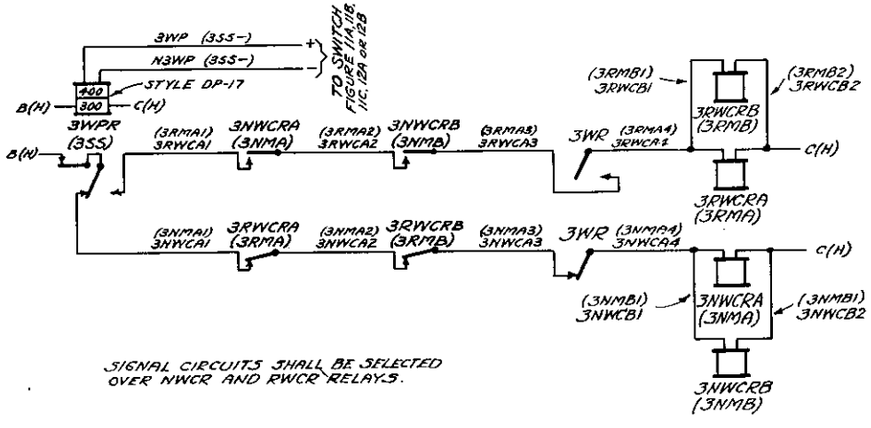

SIGNAL CIRCUITS SHALL BE SELECTED OVER NWCR AND RWCR RELAYS.

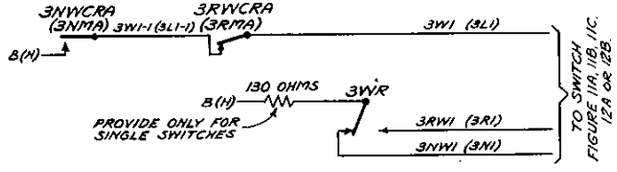

STYLE DP-17 POLAR INDICATION RELAYS WHERE SWITCH IS CONTROLLED FROM C.T.C. FIELD STATION OR WHERE ALL RELAY DIRECT WIRE CONTROL IS PROVIDED.

FIG. 4B

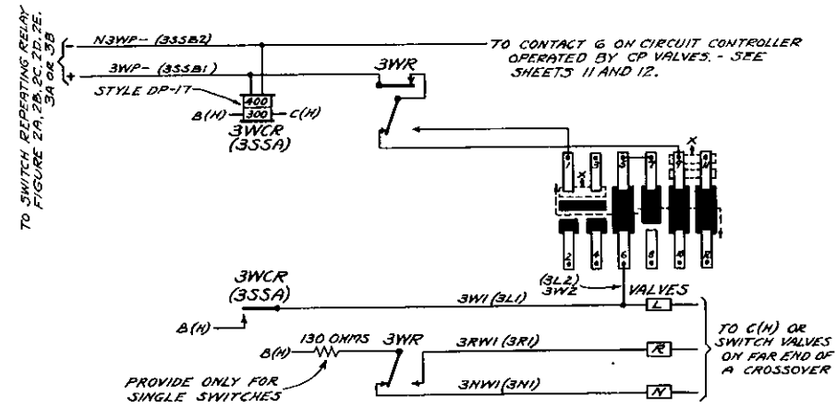

FOR USE WHERE WR RELAY CONTROLLED FROM CONVENTIONAL TYPE MACHINE IS PROVIDED FOR CONTROL OF SWITCH VALVES.

FIG. 4E

NOTE:
A.A.R. CIRCUIT NOMENCLATURE USED FOR DESIGNATING INSTRUMENTS. FORMER P.R.R. CIRCUIT NOMENCLATURE AND WIRE NUMBERS SHOWN IN PARENTHESIS.

LEVER-CONTROL AND INDICATION CIRCUITS

RELAY CONTROL FOR SWITCH VALVES
CONVENTIONAL MACHINE WHERE INDICATION MAGNETS ARE OMITTED.

REVISIONS

SHEET 4 OF 15

S-822

THE PENNSYLVANIA RAILROAD
STANDARD

CIRCUITS FOR ELECTRO-PNEUMATIC SWITCHES

OFFICE OF CHIEF ENGINEER,
PHILA., PA., MAY 24, 1950.

APPROVED: W. G. Salmonson
ASST. CHIEF ENGINEER-SIGNALS

APPROVED: [illegible]
CHIEF ENGINEER

HOK
C.J.B.

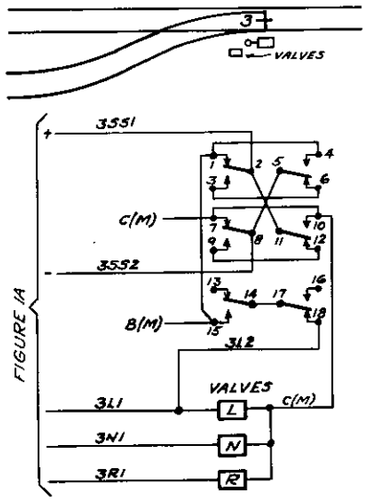

FIG. 5A

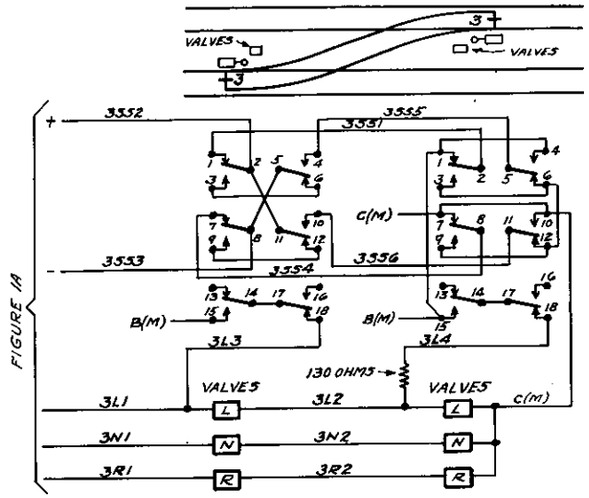

FIG. 5B FINGER TYPE INDICATION CONTROLLER

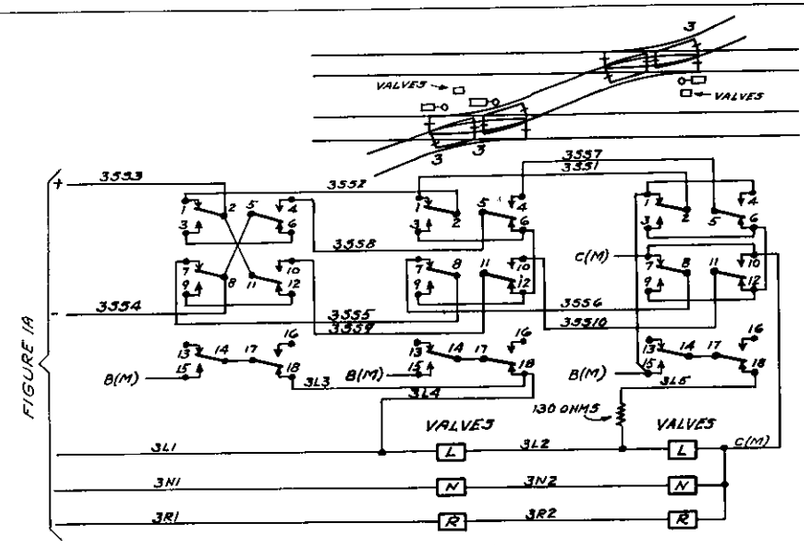

FIG. 5C

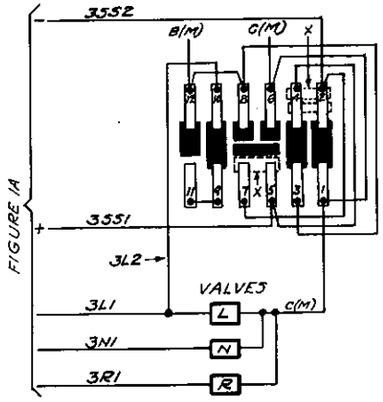

FIG. 5D

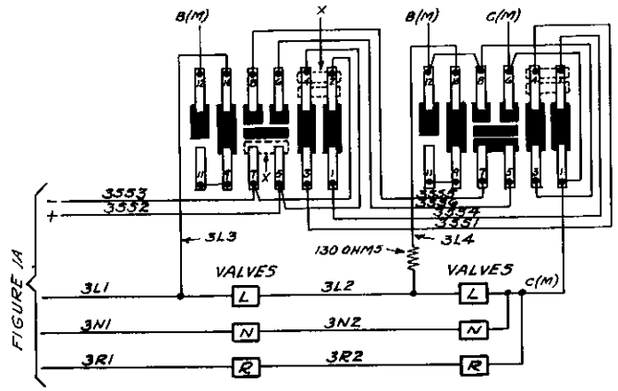

FIG. 5E ROTARY TYPE INDICATION CONTROLLER
SEGMENT "X" MUST BE REMOVED FROM CONTROLLER AT RELAY END.

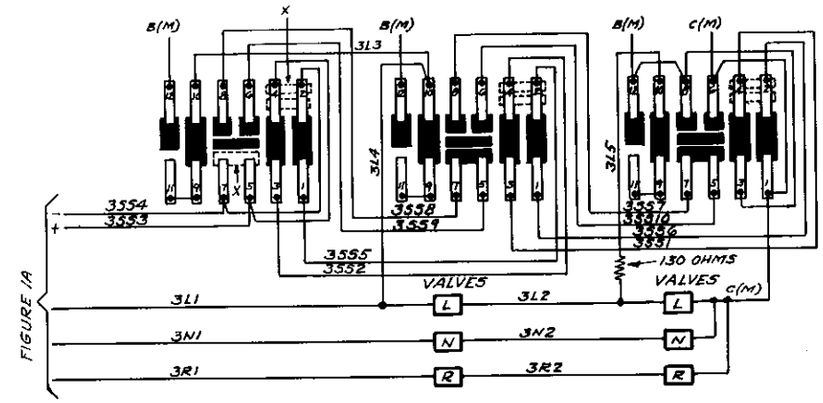

FIG. 5F

CONTACT OPERATION FINGER TYPE INDICATION CONTROLLER:
CONTACTS 1 AND 7 OPEN AND 3 AND 9 CLOSE BEFORE SWITCH IS UNLOCKED AT START OF SWITCH THROW.
CONTACTS 4 AND 10 CLOSE AND 6 AND 12 OPEN AFTER SWITCH IS LOCKED AT END OF SWITCH THROW.
CONTACTS 15 AND 18 SHALL BE ADJUSTED TO MAKE JUST BEFORE INDICATION CONTACTS BREAK.

SWITCH - CONTROL AND INDICATION CIRCUITS

STYLE A1 SWITCH & LOCK MOVEMENTS WITH STYLE C VALVES WHERE 18', 20' OR 30' SWITCH POINTS ARE PROVIDED.

REVISIONS

SWITCH CONTROL AND INDICATION CIRCUITS SUPERSEDE S-822, SH.1 DATED 7-18-28, SH.8 DATED 1-10-31.

SHEET 5 OF 15

S-822

THE PENNSYLVANIA RAILROAD
STANDARD

CIRCUITS FOR ELECTRO-PNEUMATIC SWITCHES

OFFICE OF CHIEF ENGINEER,
PHILA., PA., MAY 24, 1950.

APPROVED: W. G. Salmonson
ASST. CHIEF ENGINEER-SIGNALS

APPROVED: J. T. Cornish
CHIEF ENGINEER

J.R.H.

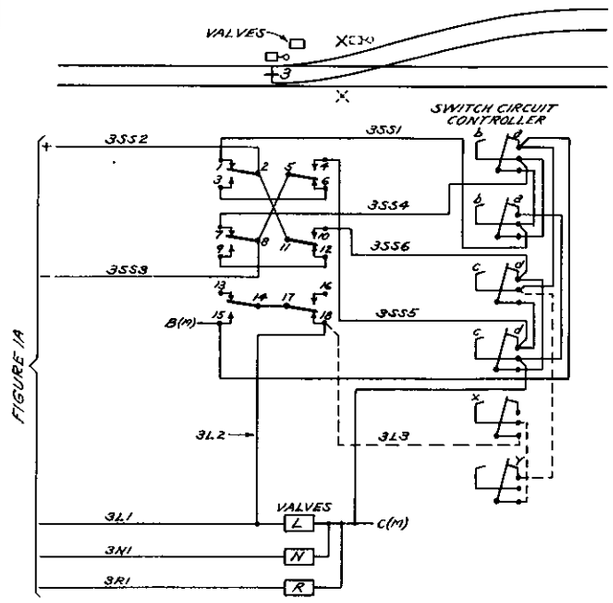

FIG. 6A

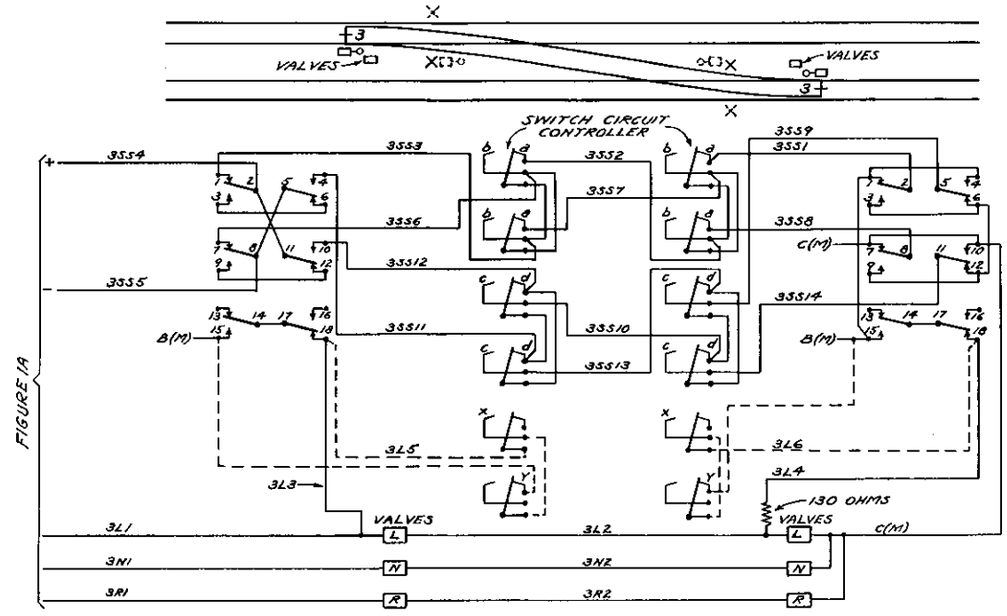

FIG. 6B

FINGER TYPE INDICATION CONTROLLER

CONTACT OPERATION FINGER TYPE INDICATION CONTROLLER:
CONTACTS 1 AND 7 OPEN AND 3 AND 9 CLOSE BEFORE SWITCH IS UNLOCKED AT START OF SWITCH THROW.
CONTACTS 4 AND 10 CLOSE AND 6 AND 12 OPEN AFTER SWITCH IS LOCKED AT END OF SWITCH THROW.
CONTACTS 15 AND 18 SHALL BE ADJUSTED TO MAKE JUST BEFORE INDICATION CONTACTS BREAK.

CONTACT OPERATION US SWITCH CIRCUIT CONTROLLER:
CONTACTS a ARE CLOSED WHEN SWITCH IS NORMAL.
CONTACTS b ARE OPEN WHEN SWITCH IS NORMAL.
CONTACTS c ARE CLOSED WHEN SWITCH IS REVERSE.
CONTACTS d ARE OPEN WHEN SWITCH IS REVERSE.
CONTACT x CLOSES BEFORE CONTACTS a OPEN.
CONTACT Y CLOSES BEFORE CONTACTS c OPEN.

WHERE SWITCH AND LOCK MOVEMENT IS USED AT THE MID-POINT (PLAN S-222-A) CIRCUITS SHOWN DOTTED SHALL BE PROVIDED.

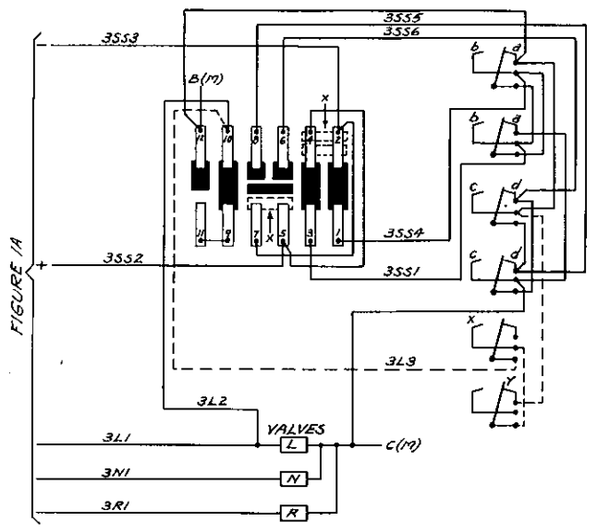

FIG. 6C

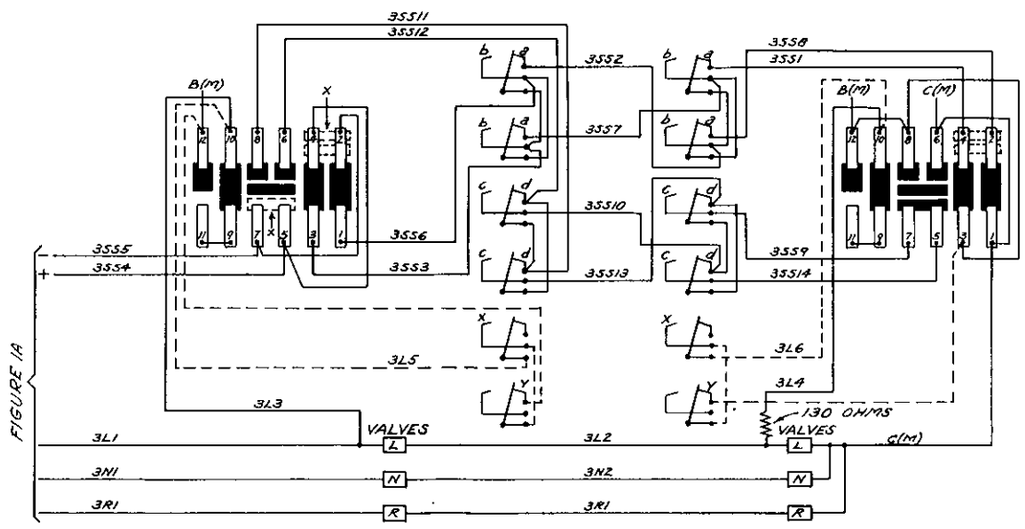

FIG. 6D

ROTARY TYPE INDICATION CONTROLLER

SEGMENT 'X' MUST BE REMOVED FROM CONTROLLER AT RELAY END.

H.O.N.
C.J.B.

REVISIONS

SWITCH CONTROL AND INDICATION CIRCUITS SUPERSEDE S-822, SHTS. 17, 18, 19 & 20 DATED 8-15-34.

SWITCH-CONTROL AND INDICATION CIRCUITS

STYLE A1 SWITCH AND LOCK MOVEMENTS WITH STYLE C VALVES WHERE 45' SWITCH POINTS ARE PROVIDED.

SHEET 6 OF 15

S-822

THE PENNSYLVANIA RAILROAD
STANDARD

CIRCUITS FOR ELECTRO-PNEUMATIC SWITCHES

OFFICE OF CHIEF ENGINEER,
PHILA., PA., MAY 24, 1950.

APPROVED: W. G. Salmonson
ASST. CHIEF ENGINEER-SIGNALS

APPROVED: [illegible]
CHIEF ENGINEER

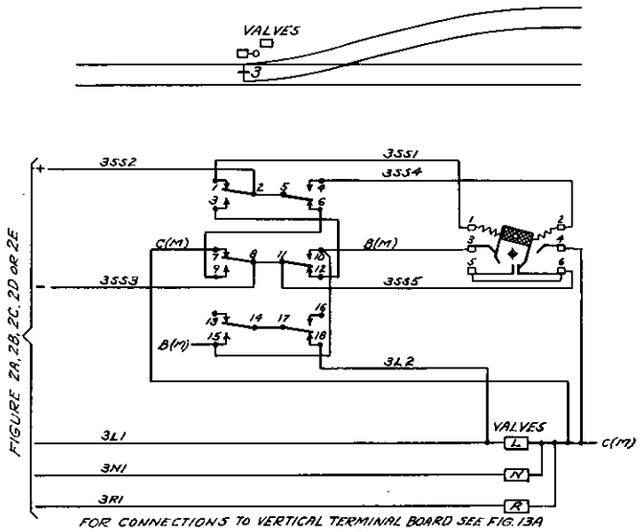

FOR CONNECTIONS TO VERTICAL TERMINAL BOARD SEE FIG. 13A

FIG. 7A

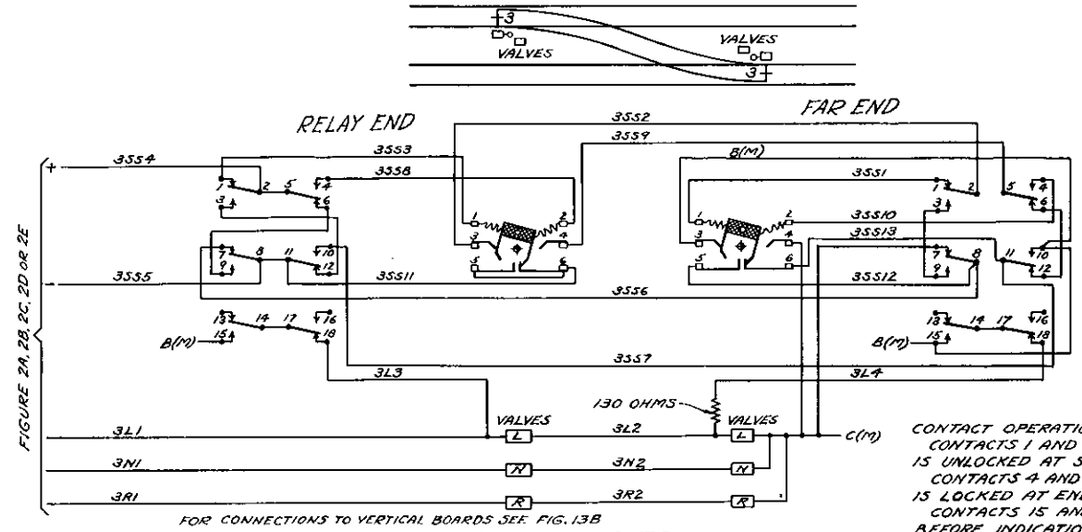

FOR CONNECTIONS TO VERTICAL BOARDS SEE FIG. 13B

FIG. 7B

FINGER TYPE INDICATION CONTROLLER

CONTACT OPERATION FINGER TYPE INDICATION CONTROLLER
CONTACTS 1 AND 7 OPEN AND 3 AND 9 CLOSE BEFORE SWITCH IS UNLOCKED AT START OF SWITCH THROW.
CONTACTS 4 AND 10 CLOSE AND 6 AND 12 OPEN AFTER SWITCH IS LOCKED AT END OF SWITCH THROW.
CONTACTS 15 AND 18 SHALL BE ADJUSTED TO MAKE JUST BEFORE INDICATION CONTACTS BREAK.

CONTACTS ✦ ARE OPERATED BY SWITCH VALVE.

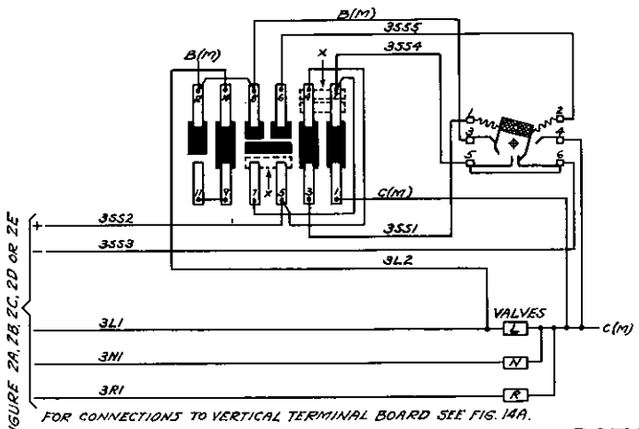

FOR CONNECTIONS TO VERTICAL TERMINAL BOARD SEE FIG. 14A.

FIG. 7C

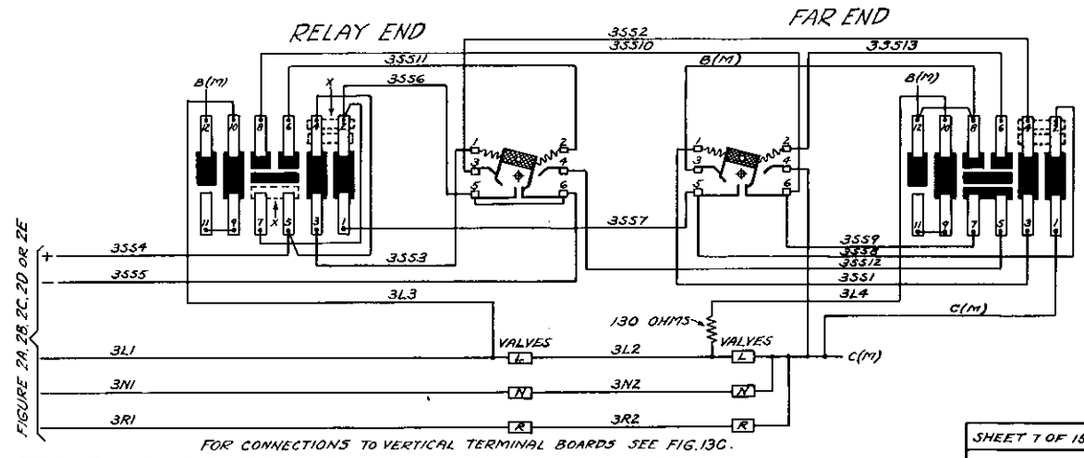

FOR CONNECTIONS TO VERTICAL TERMINAL BOARDS SEE FIG. 13C.

FIG. 7D

ROTARY TYPE INDICATION CONTROLLER

SEGMENT "X" MUST BE REMOVED FROM CONTROLLER AT RELAY END.

SWITCH-CONTROL AND INDICATION CIRCUITS

STYLE A1 SWITCH AND LOCK MOVEMENTS WITH CP VALVES WHERE 18', 20', OR 30' SWITCH POINTS ARE PROVIDED.

REVISIONS

SWITCH CONTROL AND INDICATION CIRCUIT SUPERSEDES S-822, SH. 4 DATED 6-25-29 AND REVISED 9-27-48 AND SH. 5 DATED 10-30-29 AND REVISED 4-14-32.

SHEET 1 OF 15

S-822

THE PENNSYLVANIA RAILROAD
STANDARD

CIRCUITS FOR ELECTRO-PNEUMATIC SWITCHES

OFFICE OF CHIEF ENGINEER,
PHILA., PA., MAY 24, 1950.

APPROVED: M. G. Salmonson
ASST. CHIEF ENGINEER—SIGNALS

APPROVED: J. A. Pruitt
CHIEF ENGINEER

J.E.N.
G.J.B.

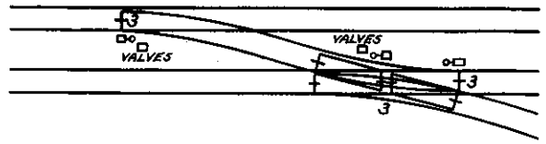

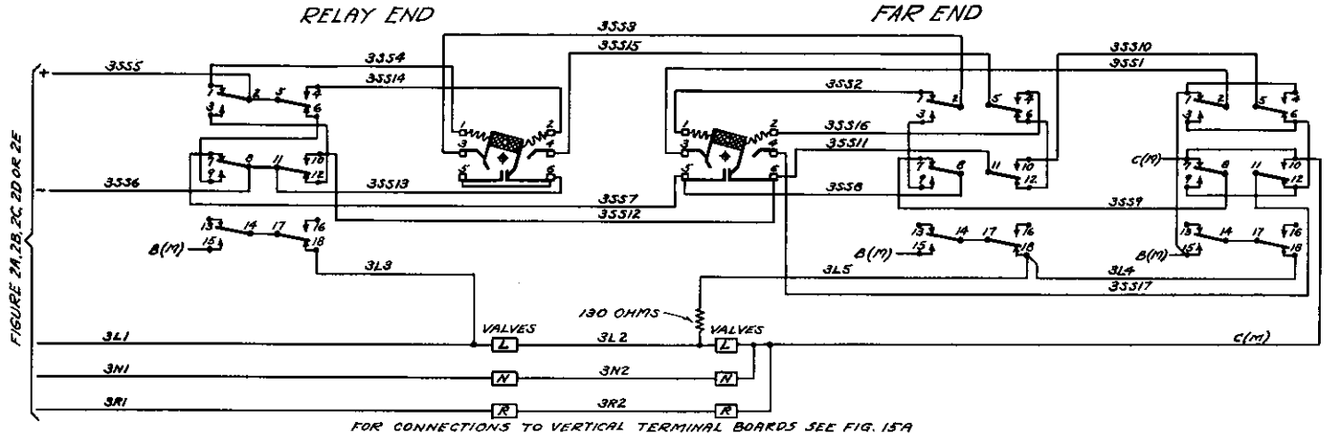

FOR CONNECTIONS TO VERTICAL TERMINAL BOARDS SEE FIG. 15A

FINGER TYPE INDICATION CONTROLLER

FIG. 8A

CONTACT OPERATION FINGER TYPE INDICATION CONTROLLER:
CONTACTS 1 AND 7 OPEN AND 3 AND 9 CLOSE BEFORE SWITCH IS UNLOCKED AT START OF SWITCH THROW.
CONTACTS 4 AND 10 CLOSE AND 6 AND 12 OPEN AFTER SWITCH IS LOCKED AT END OF SWITCH THROW.
CONTACTS 15 AND 18 SHALL BE ADJUSTED TO MAKE JUST BEFORE INDICATION CONTACTS BREAK.

CONTACTS ✦ ARE OPERATED BY SWITCH VALVE.

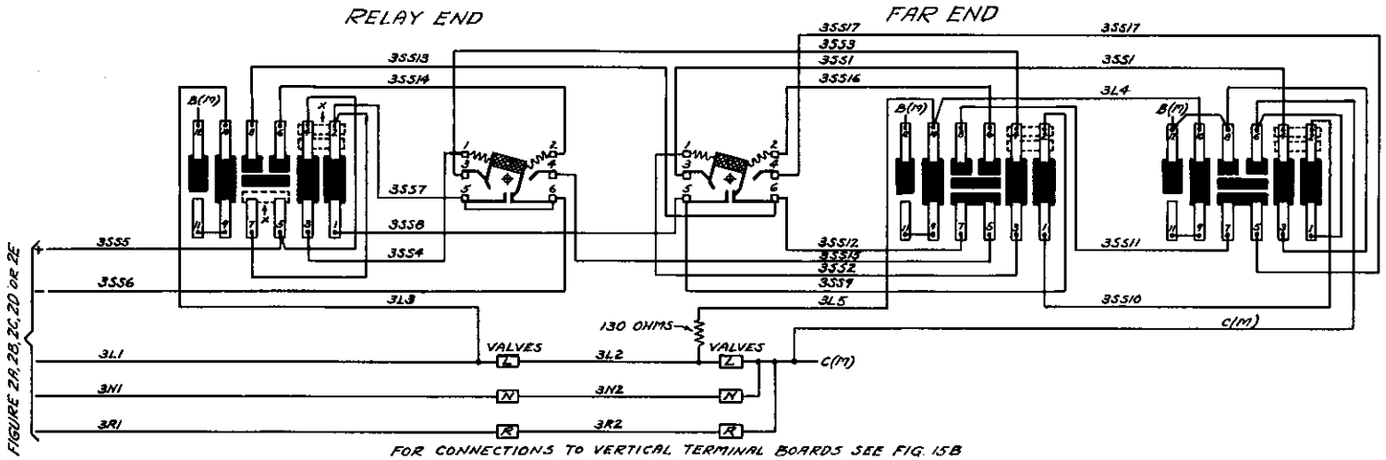

FOR CONNECTIONS TO VERTICAL TERMINAL BOARDS SEE FIG. 15B

ROTARY TYPE INDICATION CONTROLLER

SEGMENT "X" MUST BE REMOVED FROM CONTROLLER AT RELAY END

FIG. 8B

SWITCH-CONTROL AND INDICATION CIRCUITS

STYLE A1 SWITCH AND LOCK MOVEMENTS WITH STYLE CP VALVES WHERE 18', 20', OR 30' SWITCH POINTS ARE PROVIDED.

REVISIONS

SWITCH CONTROL AND INDICATION CIRCUIT SUPERSEDES S-822, SH.4 DATED 6-25-29 AND REVISED 9-27-48 AND SH.5 DATED 10-30-29 AND REVISED 4-14-32.

SHEET 8 OF 15

S-822

THE PENNSYLVANIA RAILROAD
STANDARD

CIRCUITS FOR ELECTRO-PNEUMATIC SWITCHES

OFFICE OF CHIEF ENGINEER,
PHILA., PA., MAY 24, 1950

APPROVED: W. G. Salmonson
ASST. CHIEF ENGINEER-SIGNALS

APPROVED: [illegible]
CHIEF ENGINEER

H.C.M.
C.J.B.

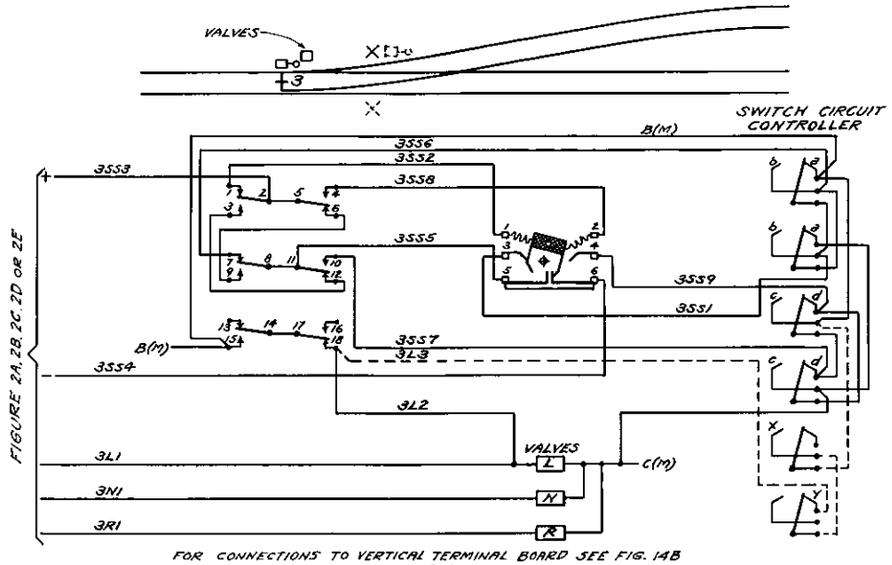

FOR CONNECTIONS TO VERTICAL TERMINAL BOARD SEE FIG. 14B

FIG. 9A

CONTACT OPERATION FINGER TYPE INDICATION CONTROLLER:
CONTACTS 1 AND 7 OPEN AND 3 AND 9 CLOSE BEFORE SWITCH IS UNLOCKED AT START OF SWITCH THROW.
CONTACTS 4 AND 10 CLOSE AND 6 AND 12 OPEN AFTER SWITCH IS LOCKED AT END OF SWITCH THROW.
CONTACTS 15 AND 18 SHALL BE ADJUSTED TO MAKE JUST BEFORE INDICATION CONTACTS BREAK.

CONTACT OPERATION US SWITCH CIRCUIT CONTROLLER:
CONTACTS a ARE CLOSED WHEN SWITCH IS NORMAL.
CONTACTS b ARE OPEN WHEN SWITCH IS NORMAL.
CONTACTS c ARE CLOSED WHEN SWITCH IS REVERSE.
CONTACTS d ARE OPEN WHEN SWITCH IS REVERSE.
CONTACT x CLOSES BEFORE CONTACTS a OPEN.
CONTACT Y CLOSES BEFORE CONTACTS c OPEN.

WHERE SWITCH AND LOCK MOVEMENT IS USED AT THE MID-POINT (PLAN S-222-A) CIRCUITS SHOWN DOTTED SHALL BE PROVIDED.

CONTACTS ⊕ ARE OPERATED BY SWITCH VALVE

SWITCH-CONTROL AND INDICATION CIRCUITS

STYLE A1 SWITCH AND LOCK MOVEMENTS WITH CP VALVES WHERE 45' SWITCH POINTS ARE PROVIDED.

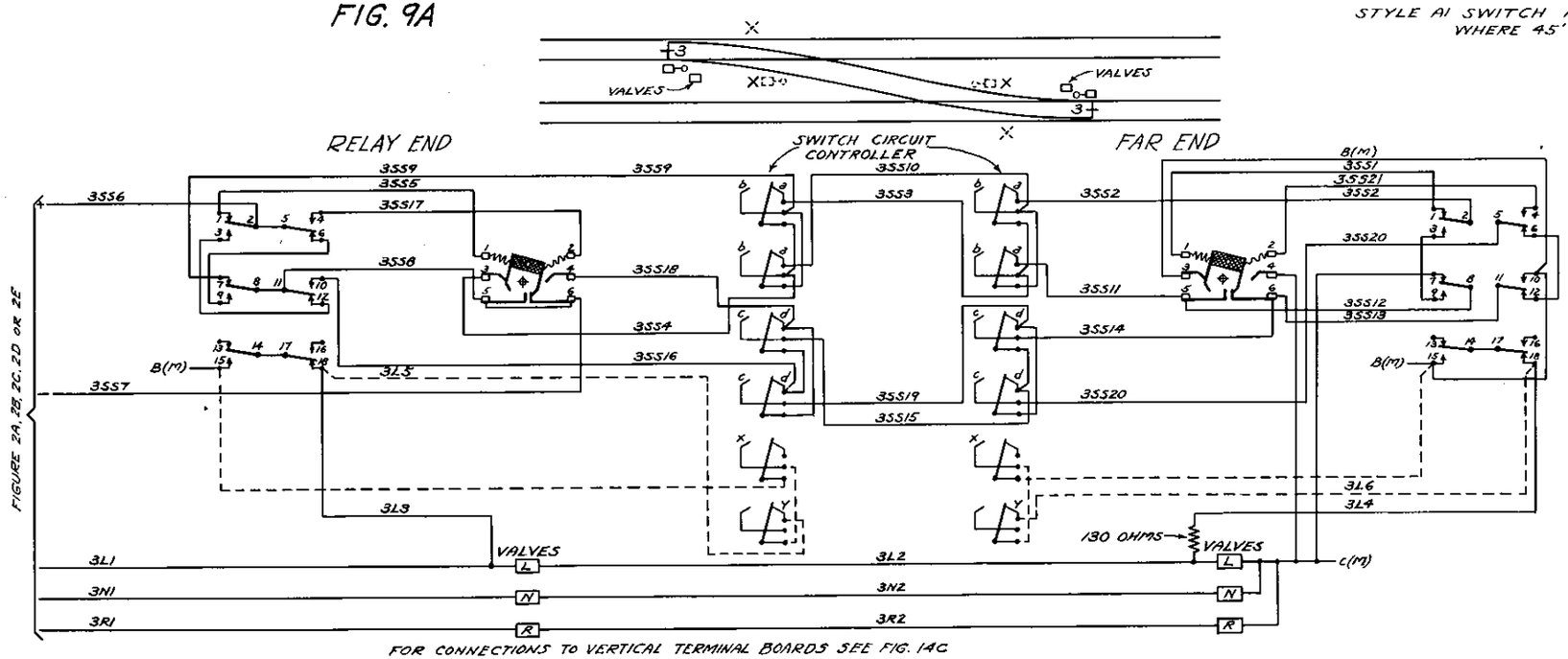

FOR CONNECTIONS TO VERTICAL TERMINAL BOARDS SEE FIG. 14C

FIG. 9B

REVISIONS

SWITCH CONTROL AND INDICATION CIRCUITS SUPERSEDE S-822. SHTS. 12 AND 13 DATED 8-15-34.

SHEET 9 OF 15

S-822

THE PENNSYLVANIA RAILROAD
STANDARD
CIRCUITS FOR ELECTRO-PNEUMATIC SWITCHES

OFFICE OF CHIEF ENGINEER,
PHILA., PA., MAY 24, 1950.

APPROVED: H. G. Salmonson
ASST. CHIEF ENGINEER-SIGNALS

APPROVED: J. Pennitt
CHIEF ENGINEER

H.O.N.
C.J.B.

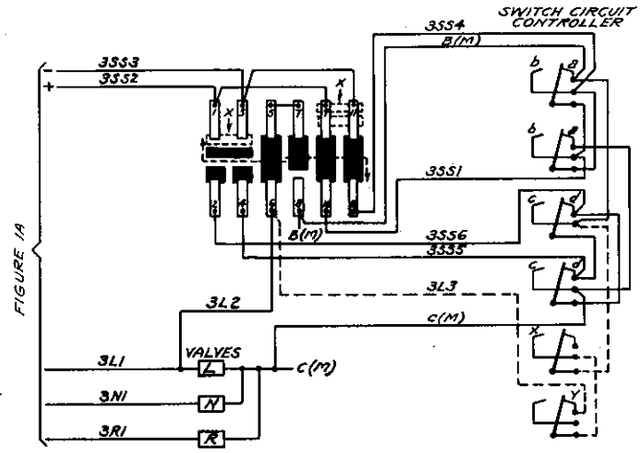

FIG. 10A

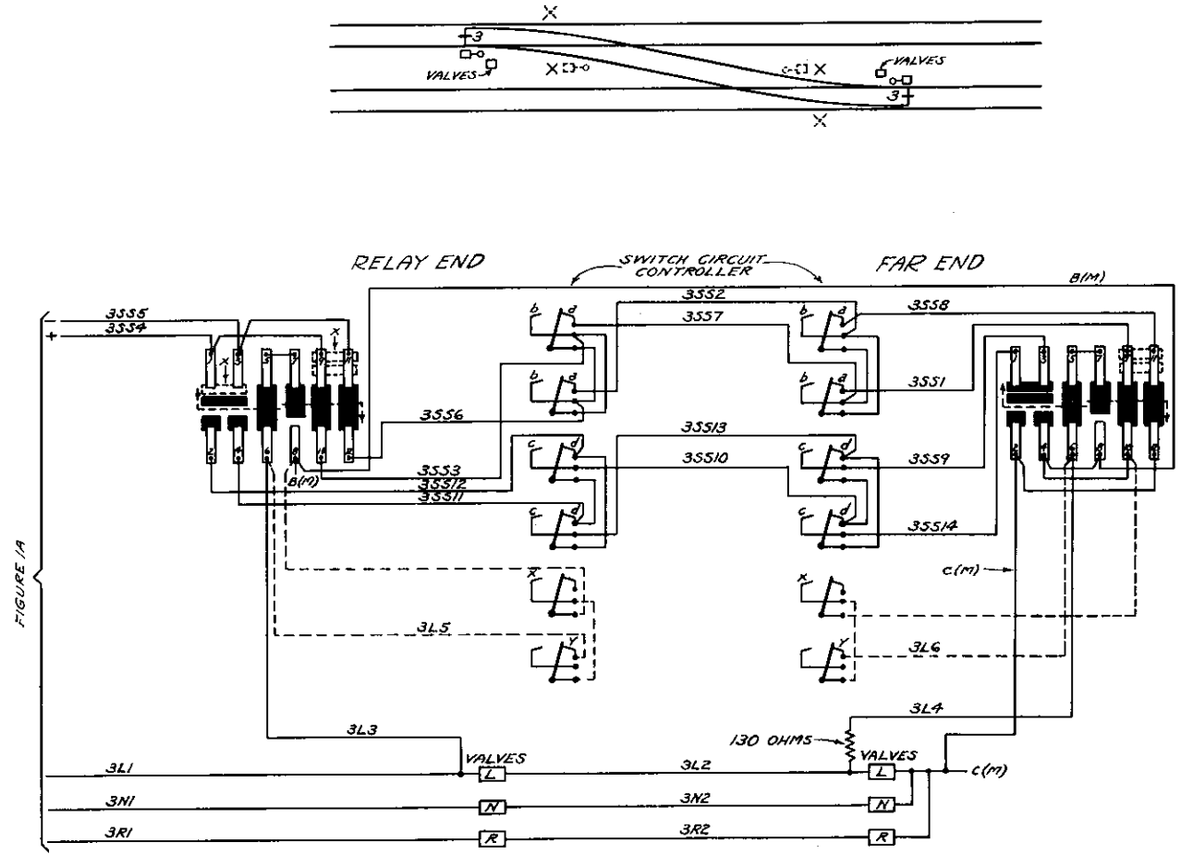

FIG. 10B

CONTACT OPERATION US SWITCH CIRCUIT CONTROLLER
CONTACTS a ARE CLOSED WHEN SWITCH IS NORMAL.
CONTACTS b ARE OPEN WHEN SWITCH IS NORMAL.
CONTACTS c ARE CLOSED WHEN SWITCH IS REVERSE.
CONTACTS d ARE OPEN WHEN SWITCH IS REVERSE.
CONTACT X CLOSES BEFORE CONTACTS a OPEN.
CONTACT Y CLOSES BEFORE CONTACTS c OPEN.

WHERE SWITCH AND LOCK MOVEMENT IS USED AT THE MID-POINT (PLAN S-222-A) CIRCUITS SHOWN DOTTED SHALL BE PROVIDED.

SEGMENT "X" MUST BE REMOVED FROM CONTROLLER AT RELAY END.

SWITCH-CONTROL AND INDICATION CIRCUITS

STYLE A5 SWITCH AND LOCK MOVEMENTS WITH C VALVES
WHERE 45' SWITCH POINTS ARE PROVIDED

REVISIONS

SWITCH CONTROL AND INDICATION CIRCUIT SUPERSEDES S-822, SHTS. 15 & 16 DATED 8-15-34.

SHEET 10 OF 15

S-822

THE PENNSYLVANIA RAILROAD
STANDARD

CIRCUITS FOR ELECTRO-PNEUMATIC SWITCHES

OFFICE OF CHIEF ENGINEER,
PHILA., PA., MAY 24, 1950.

APPROVED: W. G. Salmonson
ASST. CHIEF ENGINEER - SIGNALS

APPROVED: J. A. Brewitt
CHIEF ENGINEER

W.D.H.
C.J.B.

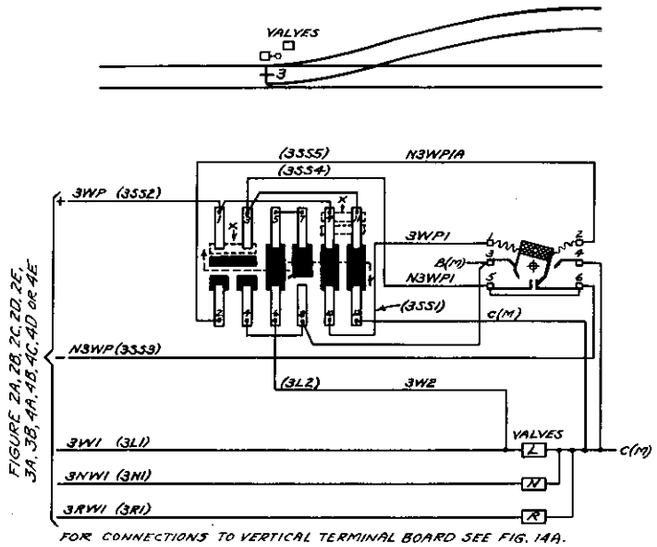

FOR CONNECTIONS TO VERTICAL TERMINAL BOARD SEE FIG. 14A.

FIG. 11A

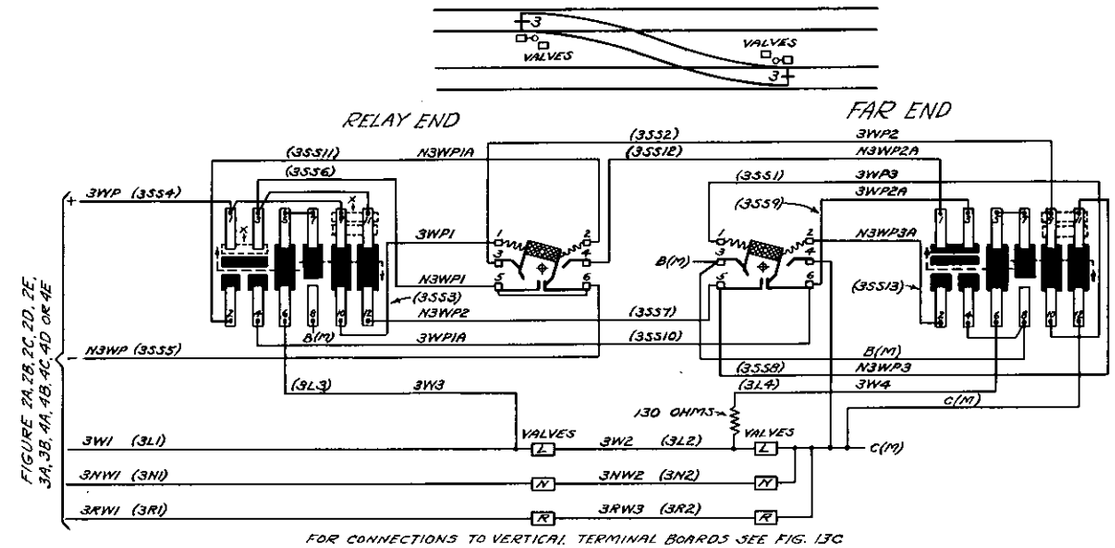

FOR CONNECTIONS TO VERTICAL TERMINAL BOARDS SEE FIG. 13C

FIG. 11B

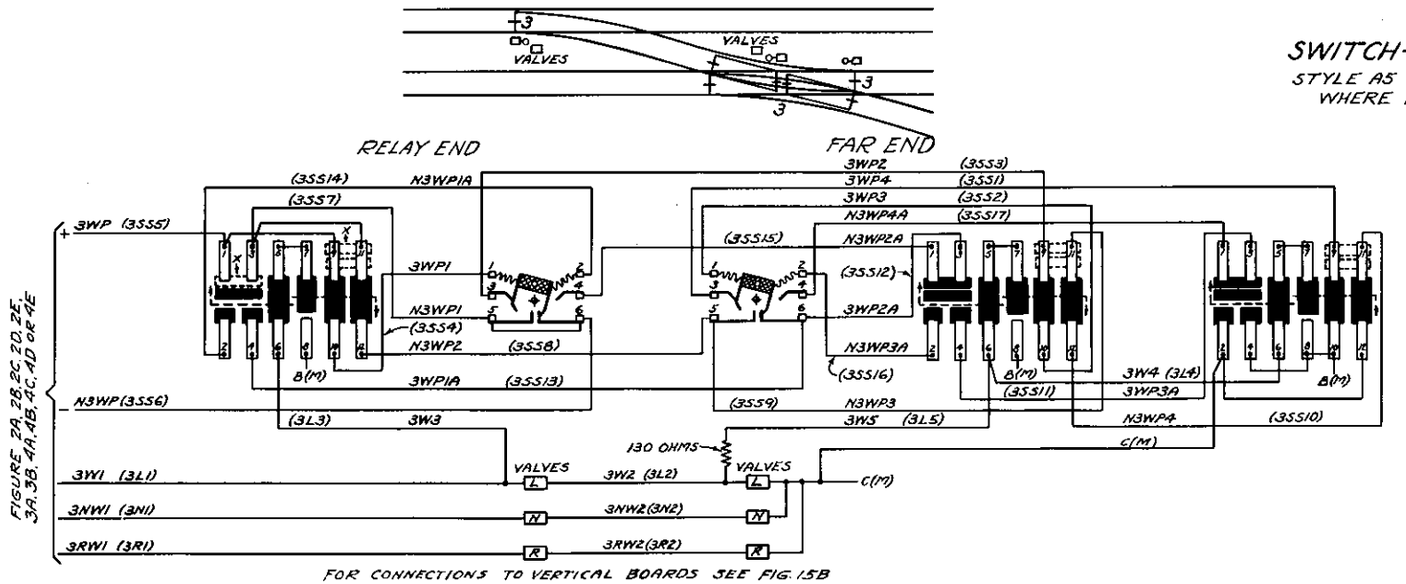

FOR CONNECTIONS TO VERTICAL BOARDS SEE FIG. 15B

FIG. 11C

SWITCH-CONTROL AND INDICATION CIRCUITS

STYLE A5 SWITCH AND LOCK MOVEMENTS WITH CP VALVES WHERE 18', 20', OR 30' SWITCH POINTS ARE PROVIDED

CONTACTS ⊕ ARE OPERATED BY SWITCH VALVE.

SEGMENT "X" MUST BE REMOVED FROM CONTROLLER AT RELAY END.

A.A.R. CIRCUIT NOMENCLATURE USED FOR WIRE NUMBERS. FORMER P.R.R. WIRE NUMBERS SHOWN IN PARENTHESIS.

REVISIONS

SWITCH CONTROL AND INDICATION CIRCUIT SUPERSEDES S-822, SH. 9 DATED 5-31-32.

SHEET 11 OF 15

S-822

THE PENNSYLVANIA RAILROAD
STANDARD

CIRCUITS FOR ELECTRO-PNEUMATIC SWITCHES

OFFICE OF CHIEF ENGINEER,
PHILA., PA., MAY 24, 1950.

APPROVED: M. G. Salmonson
ASST. CHIEF ENGINEER-SIGNALS

APPROVED: G. Brown
CHIEF ENGINEER

S.R.H.
C.J.B.

CONTACT OPERATION US SWITCH CIRCUIT CONTROLLER
CONTACTS a ARE CLOSED WHEN SWITCH IS NORMAL.
CONTACTS b ARE OPEN WHEN SWITCH IS NORMAL.
CONTACTS c ARE CLOSED WHEN SWITCH IS REVERSE.
CONTACTS d ARE OPEN WHEN SWITCH IS REVERSE.
CONTACT x CLOSES BEFORE CONTACTS a OPEN.
CONTACT Y CLOSES BEFORE CONTACTS c OPEN.

WHERE SWITCH AND LOCK MOVEMENT IS USED AT THE MID-POINT (PLAN S-222-A) CIRCUITS SHOWN DOTTED SHALL BE PROVIDED.

CONTACTS ⊕ ARE OPERATED BY SWITCH VALVE.
SEGMENT "X" MUST BE REMOVED FROM CONTROLLER AT RELAY END.

A.A.R. CIRCUIT NOMENCLATURE USED FOR WIRE NUMBERS.
FORMER P.R.R. WIRE NUMBERS SHOWN IN PARENTHESIS.

SWITCH-CONTROL AND INDICATION CIRCUITS

STYLE A5 SWITCH AND LOCK MOVEMENTS WITH CP VALVES WHERE 45' SWITCH POINTS ARE PROVIDED

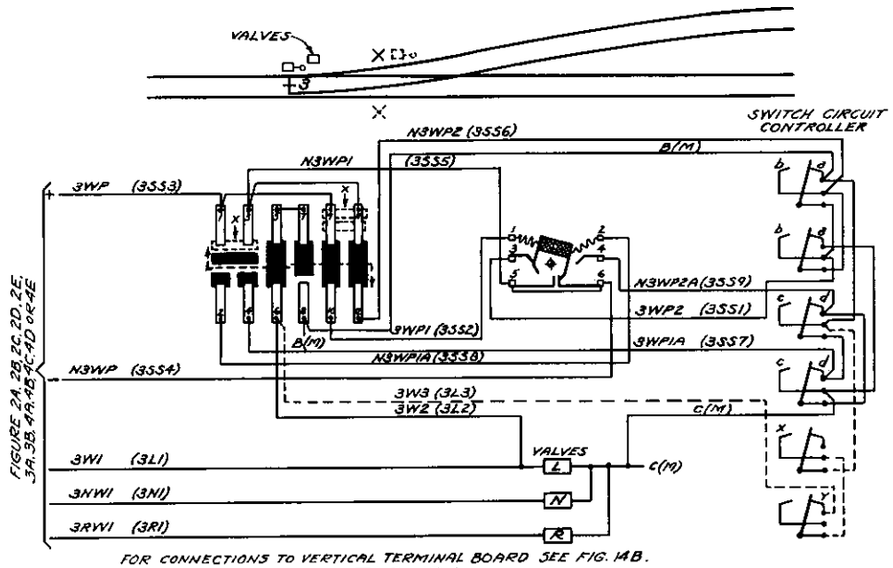

FOR CONNECTIONS TO VERTICAL TERMINAL BOARD SEE FIG. 14B.

FIG. 12A

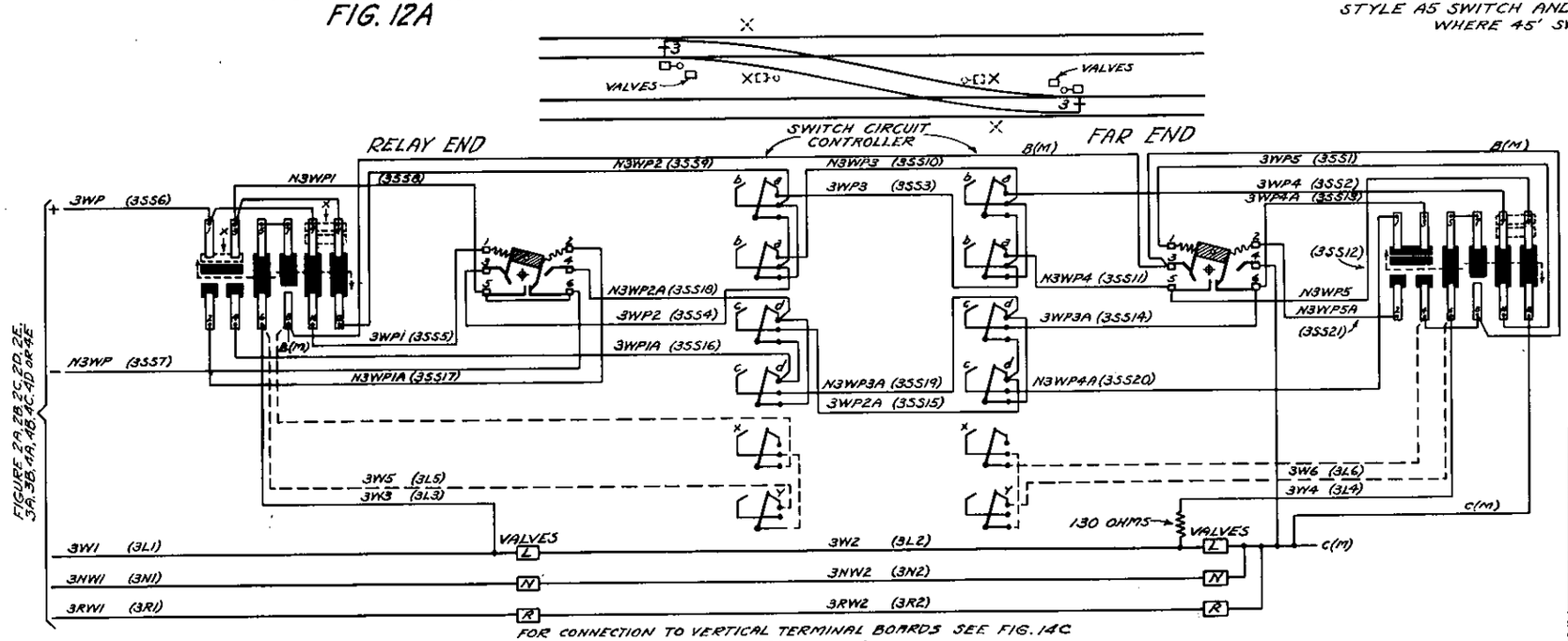

FOR CONNECTION TO VERTICAL TERMINAL BOARDS SEE FIG. 14C

FIG. 12B

REVISIONS
SWITCH CONTROL AND INDICATION CIRCUITS SUPERSEDE S-822, SHTS. 10 & 11 DATED 8-15-34.

SHEET 12 OF 15

S-822

THE PENNSYLVANIA RAILROAD
STANDARD

CIRCUITS FOR ELECTRO-PNEUMATIC SWITCHES

OFFICE OF CHIEF ENGINEER,
PHILA., PA., MAY 24, 1950.

APPROVED: H. G. Salmonson
ASST. CHIEF ENGINEER-SIGNALS

APPROVED: J. Grunitt
CHIEF ENGINEER

3/23/
C.J.B.

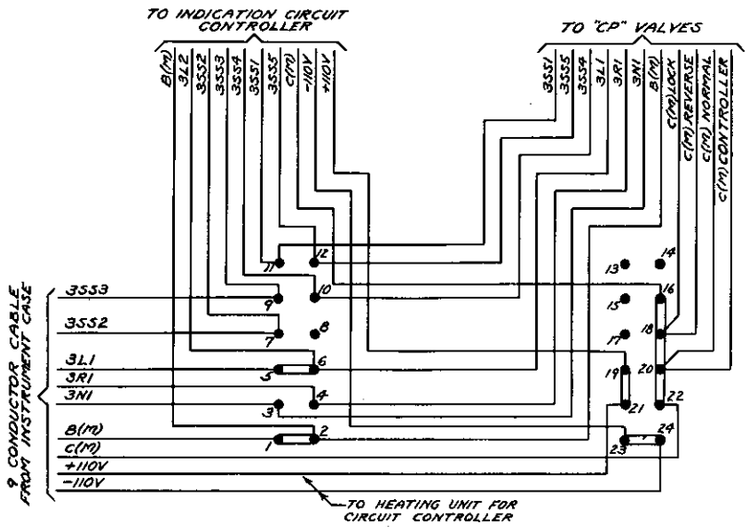

SINGLE SWITCH
CONNECTIONS FOR FIG. 7A
FIG. 13A

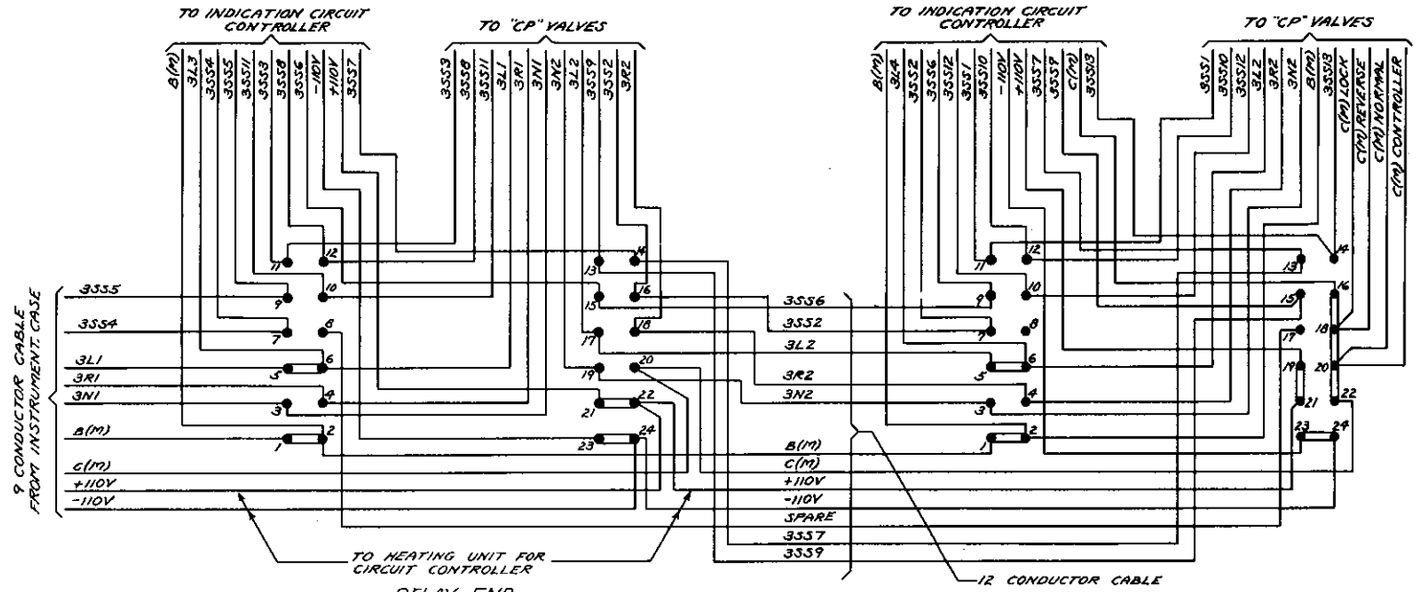

RELAY END
FAR END
CROSSOVER
CONNECTIONS FOR FIG. 7B
FIG. 13B

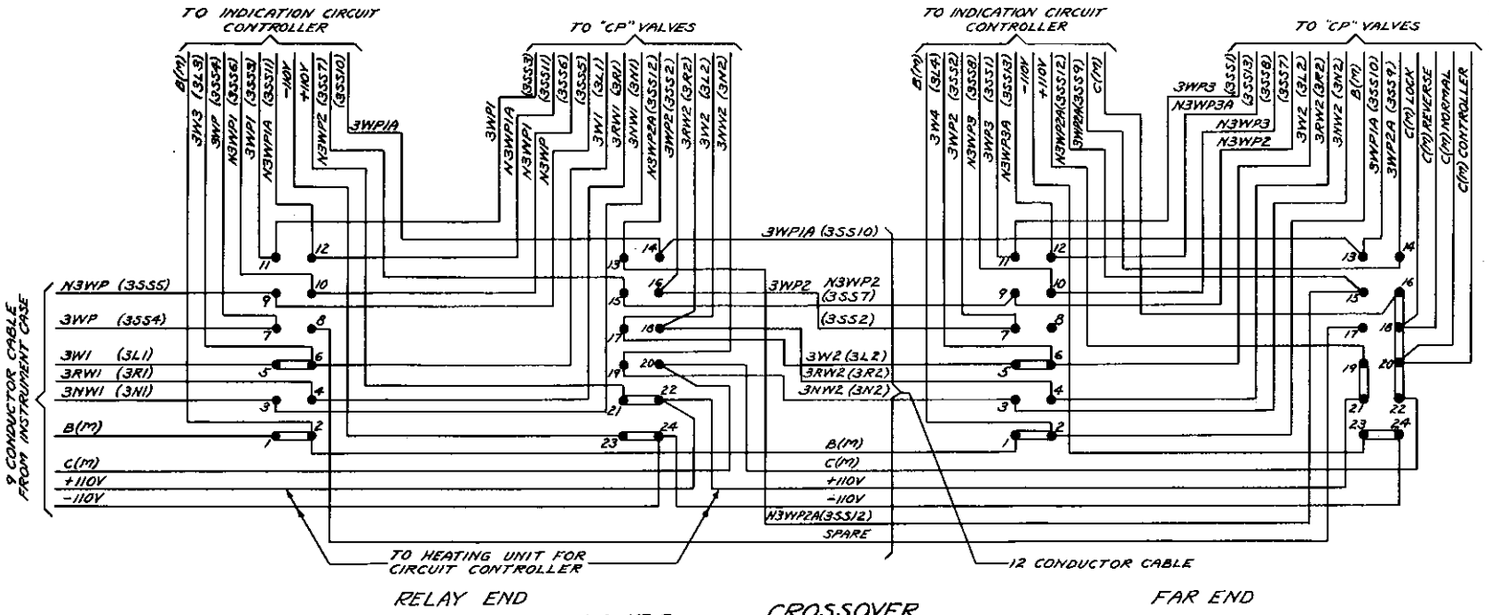

RELAY END
FAR END
FIG. 13C
CROSSOVER
CONNECTIONS FOR FIG'S. 7D & 11B

CONNECTIONS TO VERTICAL TERMINAL BOARDS FOR STYLE "CP" VALVES

A.A.R. CIRCUIT NOMENCLATURE USED FOR WIRE NUMBERS IN FIG. 13C. FORMER P.R.R. WIRE NUMBERS SHOWN IN PARENTHESIS.

REVISIONS

SUPERSEDES S-822, SH. 7 DATED 9-28-48.

SHEET 13 OF 15

S-822

THE PENNSYLVANIA RAILROAD
STANDARD
CIRCUITS FOR ELECTRO-PNEUMATIC SWITCHES

OFFICE OF CHIEF ENGINEER,
PHILA., PA., MAY 24, 1950.

APPROVED: M. F. Salmonson
ASST. CHIEF ENGINEER-SIGNALS

APPROVED: R. Trimble
CHIEF ENGINEER

W.G.H.
C.J.A.

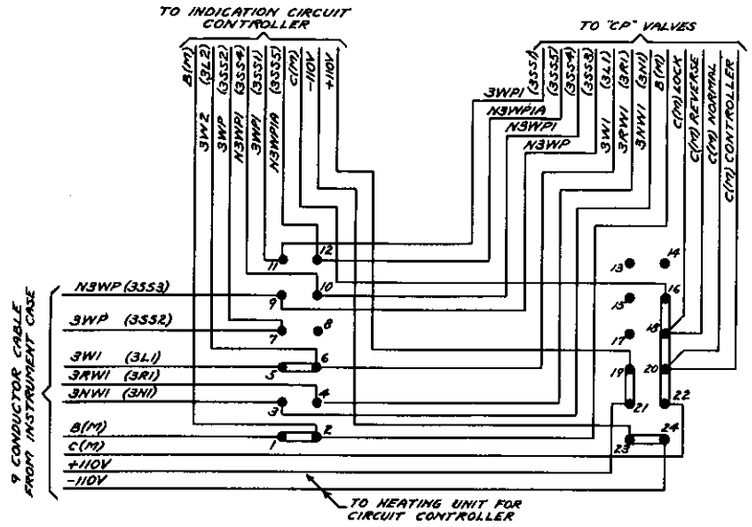

SINGLE SWITCH
CONNECTIONS FOR FIG'S. 7C AND 11A
FIG. 14A

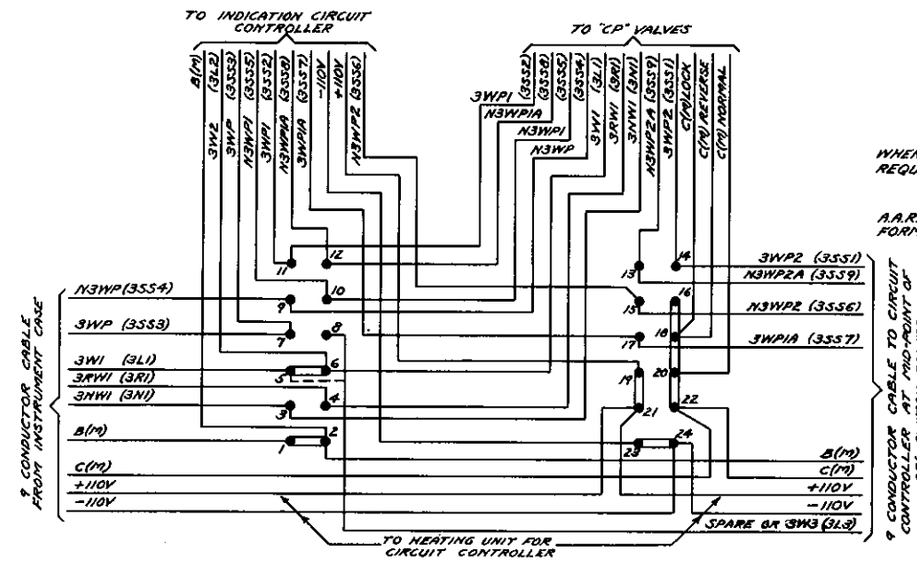

SINGLE SWITCH
CONNECTIONS FOR FIG'S. 9A AND 12A
FIG. 14B

WHEN WIRES 3L3, FIG. 14B OR 3L5 & 3L6 FIG. 14C ARE REQUIRED ARRANGE CONNECTIONS AS SHOWN DOTTED.

A.P.R. CIRCUIT NOMENCLATURE USED FOR WIRE NUMBERS. FORMER P.R.R. WIRE NUMBERS SHOWN IN PARENTHESIS.

CONNECTIONS TO VERTICAL TERMINAL BOARDS FOR STYLE "CP" VALVES

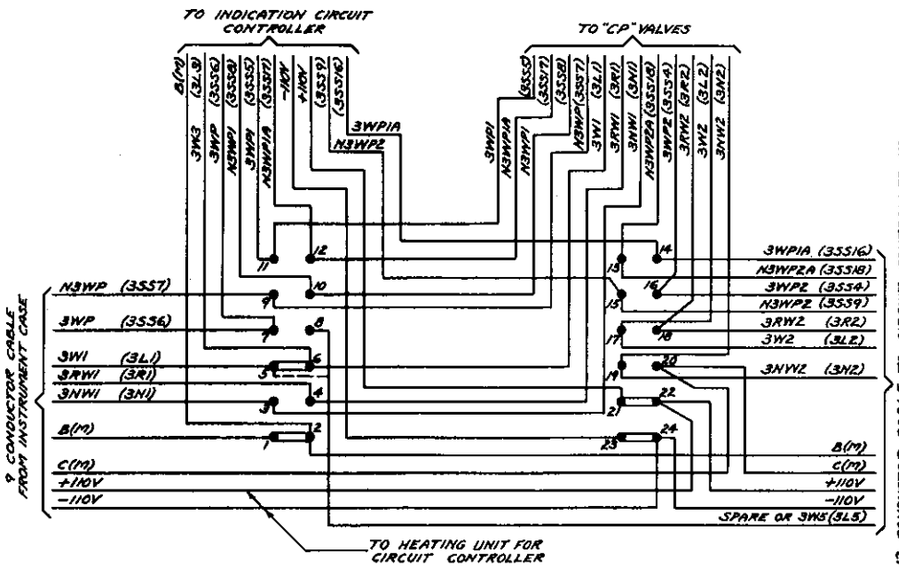

RELAY END

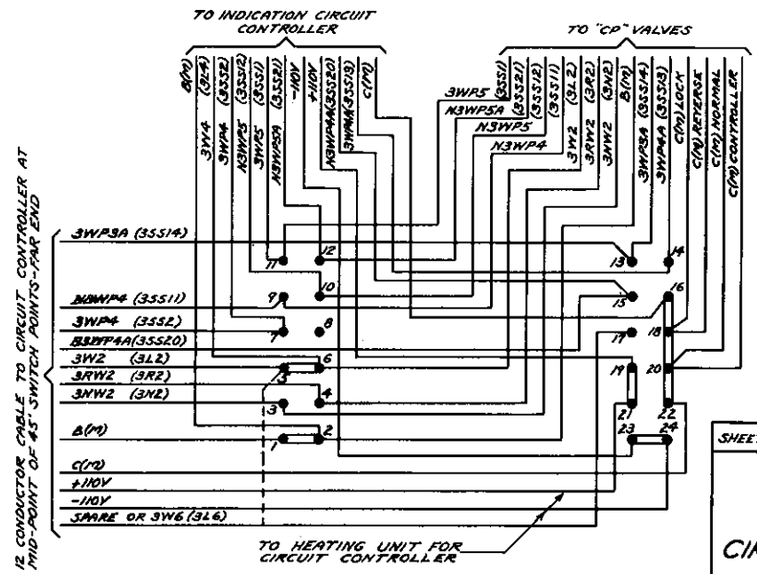

FAR END

CROSSOVER
CONNECTIONS FOR FIG'S. 9B AND 12B
FIG. 14C

REVISIONS

SUPERSEDES S-822, SH. 7 DATED 9-28-48.

SHEET 14 OF 15

S-822

THE PENNSYLVANIA RAILROAD
STANDARD
CIRCUITS FOR ELECTRO-PNEUMATIC SWITCHES

OFFICE OF CHIEF ENGINEER,
PHILA., PA., MAY 24, 1950.
APPROVED:
N. G. Salmonson
ASST. CHIEF ENGINEER-SIGNALS

APPROVED:
J. Prescott
CHIEF ENGINEER

H.C.H.
C.J.B.

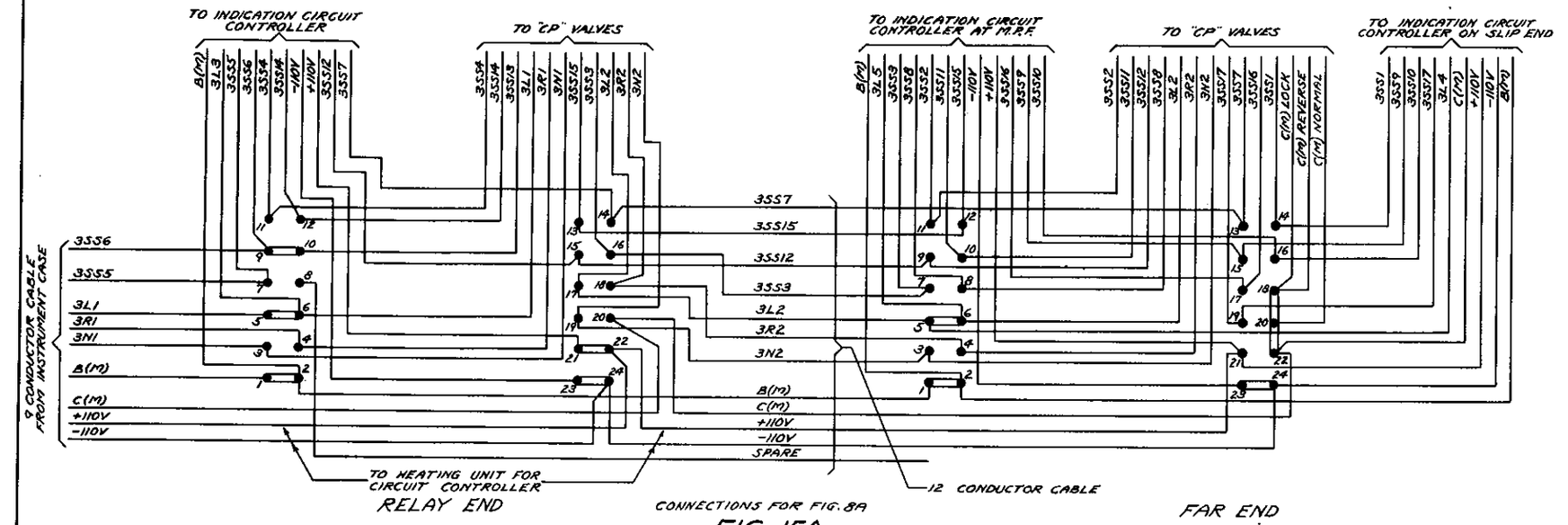

FIG. 15A

CONNECTIONS TO VERTICAL TERMINAL BOARDS FOR STYLE "CP" VALVES SLIP SWITCHES

A.A.R. CIRCUIT NOMENCLATURE USED FOR WIRE NUMBERS IN FIG. 15B. FORMER P.R.R. WIRE NUMBERS SHOWN IN PARENTHESIS.

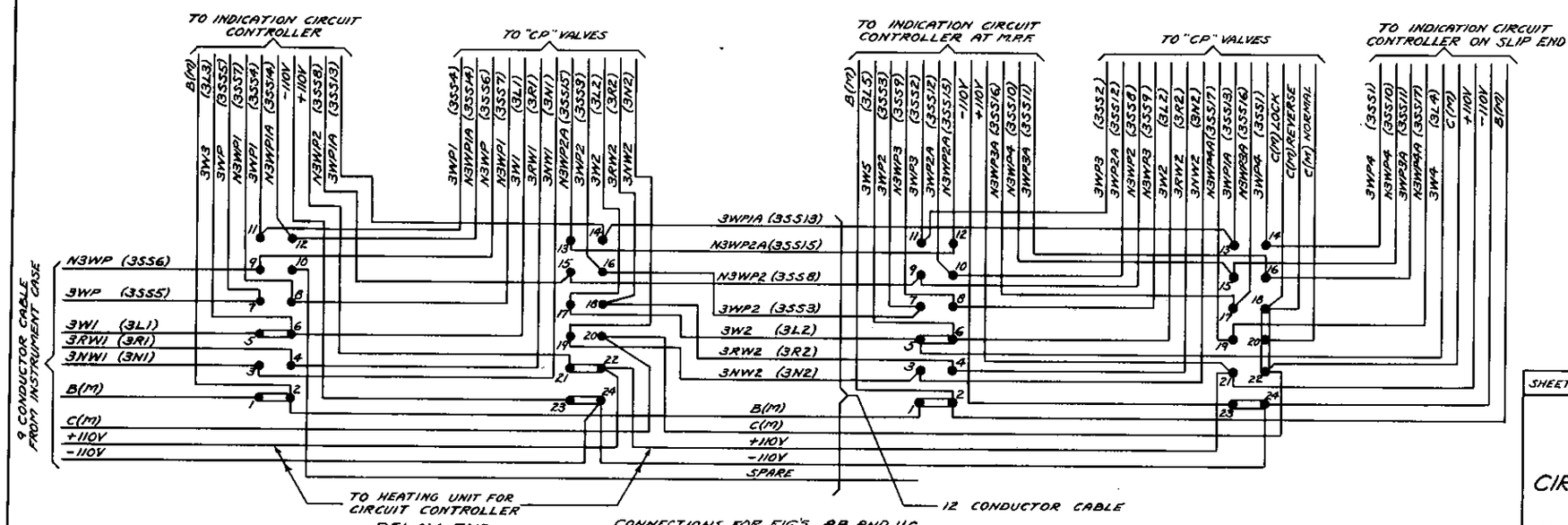

FIG. 15B

REVISIONS

SHEET 15 OF 15

S-822

THE PENNSYLVANIA RAILROAD
STANDARD

CIRCUITS FOR ELECTRO-PNEUMATIC SWITCHES

OFFICE OF CHIEF ENGINEER,
PHILA., PA., MAY 24, 1950.

APPROVED: W. G. Salmonson
ASST. CHIEF ENGINEER-SIGNALS

APPROVED: J. P. Jewett
CHIEF ENGINEER

4-27-54
C.J.A.

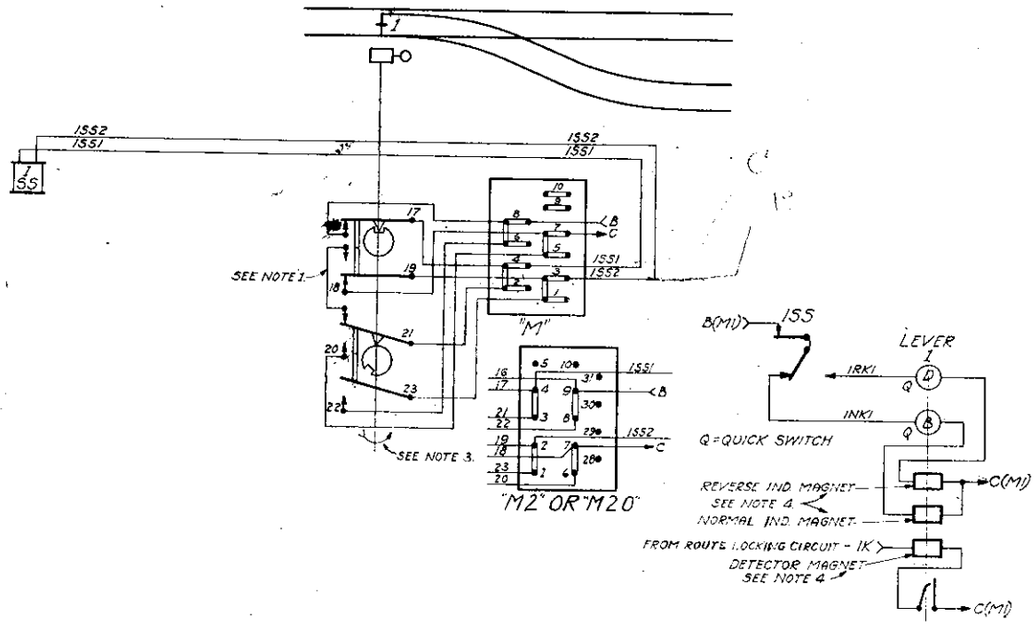

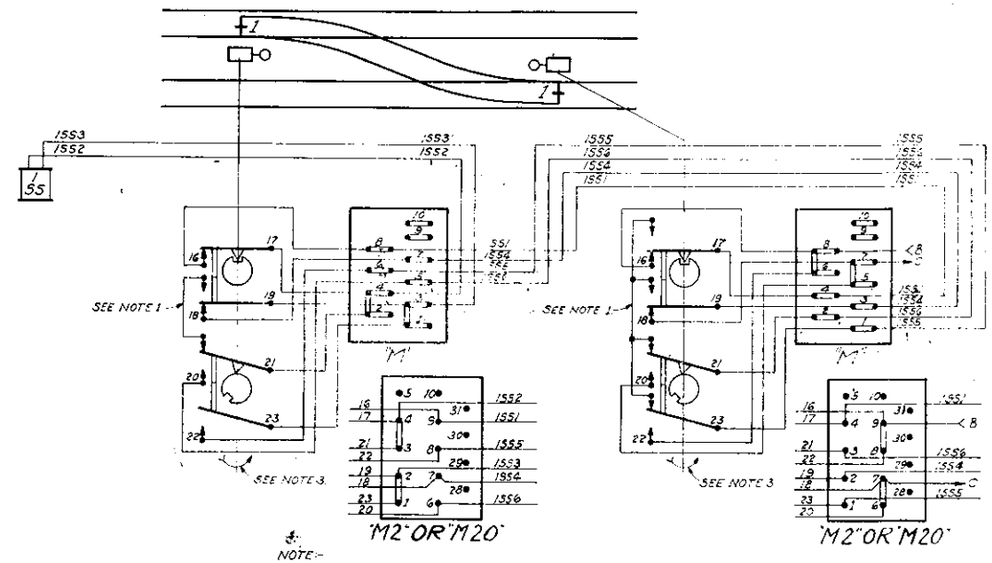

NOTE:-

1. CONTACT PIECE, ADJUSTED TO SHUNT INDICATION CIRCUITS WHILE SWITCH IS UNLOCKED.
2. INDICATION CAMS ARE ADJUSTED FOR MOVEMENT WHERE THE RIGHT HAND POINT IS NORMALLY CLOSED. WHERE LEFT HAND POINT IS NORMALLY CLOSED, REVERSE INDICATION CONTROLLER CAMS.
3. ↗ - ARROW INDICATES DIRECTION OF NEXT ROTATION.
4. SEGMENTS FOR INDICATION AND DETECTOR MAGNETS SHALL BE IN ACCORDANCE WITH PLAN S-824.

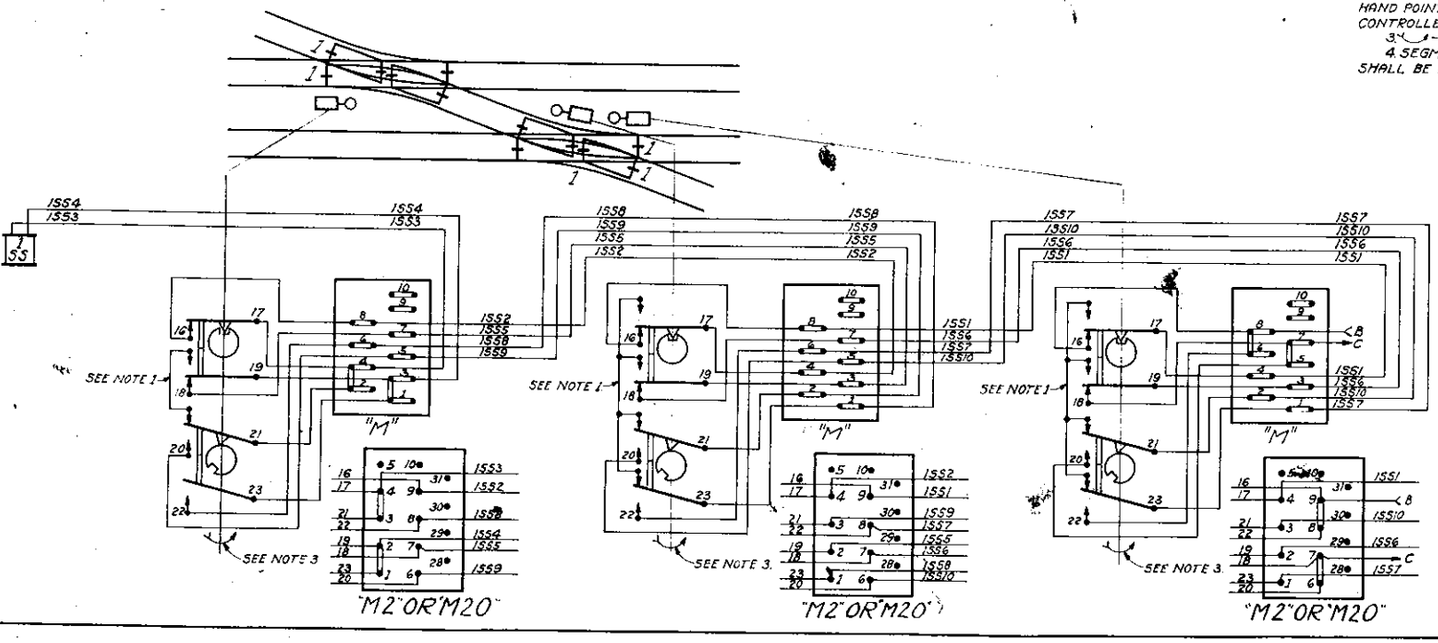

STYLE "M" & "M2" MOVEMENTS
SWITCH INDICATION AND "SS"
CONTROL CIRCUITS.
(WITH QUICK SWITCH)

REVISIONS

6-25-29 - TERMINAL BOARD FOR "M2" AND "M20" (GOVT) ADDED.
APPROVED:- [signature]

REDRAWN FROM SHS. 4,5, AND 6 OF PLAN S-823 DATED 12-6-23 LAST REVISED 12-27-24.

SHEET 1 OF 6

S-823

THE PENNSYLVANIA RAILROAD
STANDARD
CIRCUITS FOR ELECTRIC SWITCHES

OFFICE OF CHIEF SIGNAL ENGINEER,
PHILA., PA., JUNE 25, 1929.

NOT TO SCALE

Approved [signature]
Chief Signal Engineer

Approved [signature]
Chief Engineer

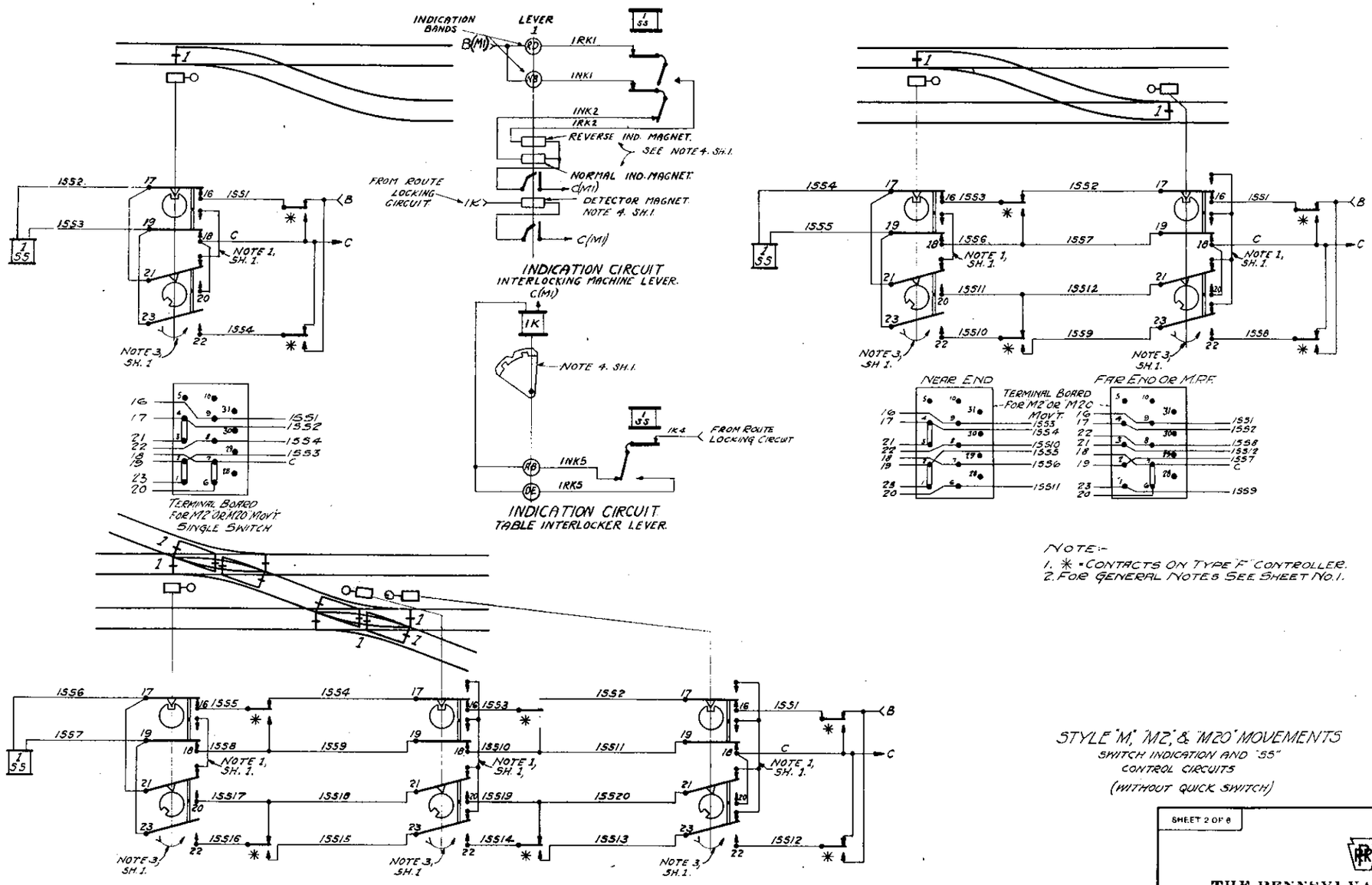

NOTE:-
1. * = CONTACTS ON TYPE "F" CONTROLLER.
2. FOR GENERAL NOTES SEE SHEET No. 1.

STYLE "M", "M2", & "M20" MOVEMENTS
SWITCH INDICATION AND "55" CONTROL CIRCUITS
(WITHOUT QUICK SWITCH)

REVISIONS.

SHEET 2 OF 8

S-823

THE PENNSYLVANIA RAILROAD
STANDARD
CIRCUITS FOR ELECTRIC SWITCHES

OFFICE OF CHIEF SIGNAL ENGINEER.
PHILA., PA., JUNE 25, 1929.

NOT TO SCALE

Approved
Chief Signal Engineer

Approved
Chief Engineer

THE PENNSYLVANIA RAILROAD
STANDARD
CIRCUITS FOR ELECTRIC SW
Approved
Approved

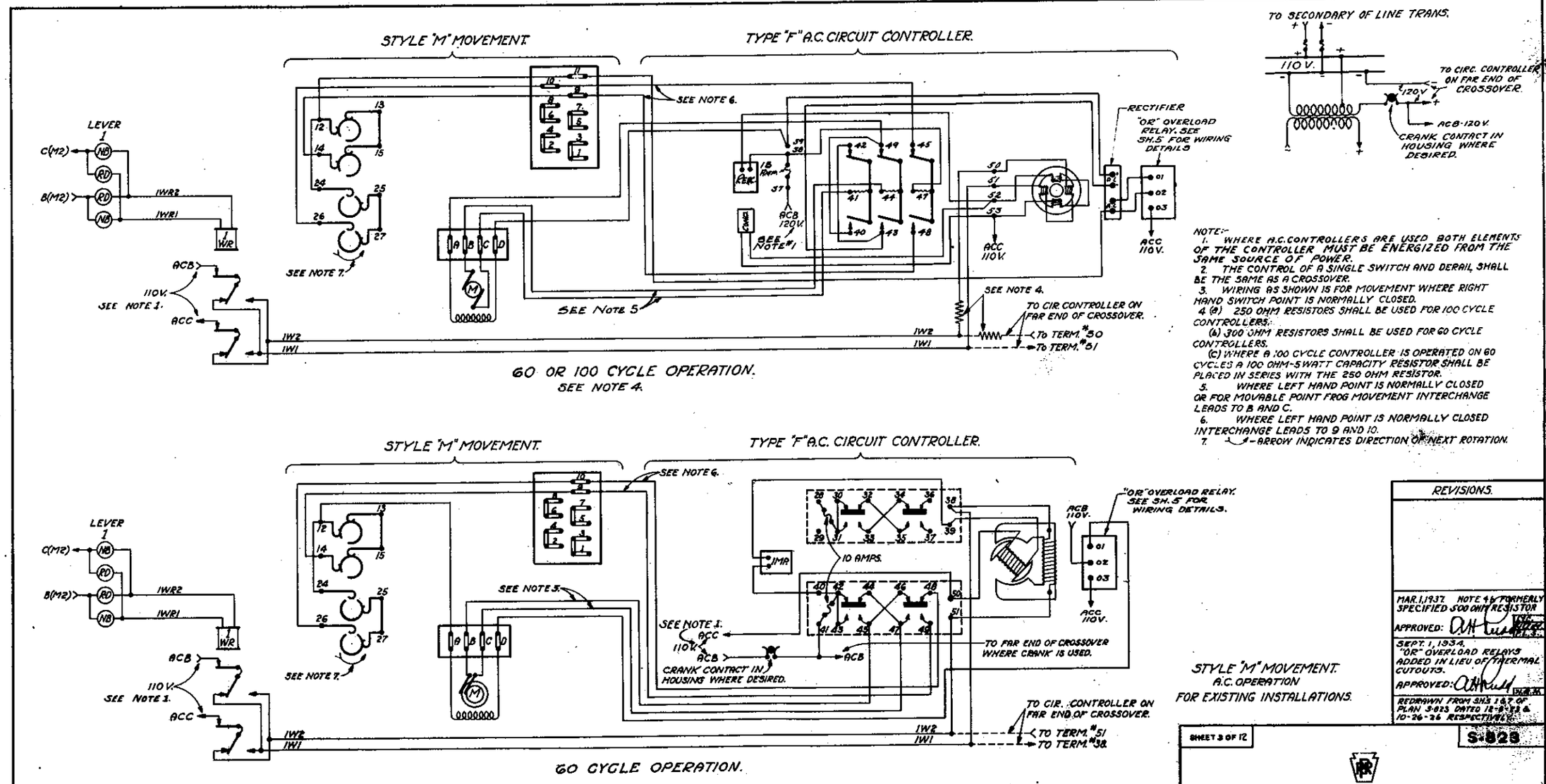

NOTE:-

1. WHERE A.C. CONTROLLER'S ARE USED BOTH ELEMENTS OF THE CONTROLLER MUST BE ENERGIZED FROM THE SAME SOURCE OF POWER.
2. THE CONTROL OF A SINGLE SWITCH AND DERAIL SHALL BE THE SAME AS A CROSSOVER.
3. WIRING AS SHOWN IS FOR MOVEMENT WHERE RIGHT HAND SWITCH POINT IS NORMALLY CLOSED.
4. (a) 250 OHM RESISTORS SHALL BE USED FOR 100 CYCLE CONTROLLERS.
   (b) 300 OHM RESISTORS SHALL BE USED FOR 60 CYCLE CONTROLLERS.
   (c) WHERE A 100 CYCLE CONTROLLER IS OPERATED ON 60 CYCLES A 100 OHM-5 WATT CAPACITY RESISTOR SHALL BE PLACED IN SERIES WITH THE 250 OHM RESISTOR.
5. WHERE LEFT HAND POINT IS NORMALLY CLOSED OR FOR MOVABLE POINT FROG MOVEMENT INTERCHANGE LEADS TO B AND C.
6. WHERE LEFT HAND POINT IS NORMALLY CLOSED INTERCHANGE LEADS TO 9 AND 10.
7. ↻ - ARROW INDICATES DIRECTION OF NEXT ROTATION.

"OR" OVERLOAD RELAYS.

FOR EXISTING INSTALLATIONS, OVERLOAD RELAY MAY BE INSTALLED IN INSTRUMENT CASE IF LOCATED IN CLOSE PROXIMITY TO THE SWITCH MOVEMENT. IF NOT, A NEW CIRCUIT CONTROLLER BOX SHALL BE USED.

STYLE "M" MOVEMENT.
A.C. OPERATION
FOR EXISTING INSTALLATIONS.

REVISIONS.

MAR. 1, 1937. NOTE 4 (a) FORMERLY SPECIFIED 500 OHM RESISTOR
APPROVED: [signature]

SEPT. 1, 1934. "OR" OVERLOAD RELAYS ADDED IN LIEU OF THERMAL CUTOUTS.
APPROVED: [signature]

REDRAWN FROM SHS 1 & 7 OF PLAN S-823 DATED 12-8-33 & 10-26-26 RESPECTIVELY.

SHEET 3 OF 12

S-828

THE PENNSYLVANIA RAILROAD
STANDARD
CIRCUITS FOR ELECTRIC SWITCHES

OFFICE OF CHIEF SIGNAL ENGINEER,
PHILA., PA., JUNE 20, 1929.

NOT TO SCALE

Approved [signature]
Chief Signal Engineer

Approved [signature]
Chief Engineer

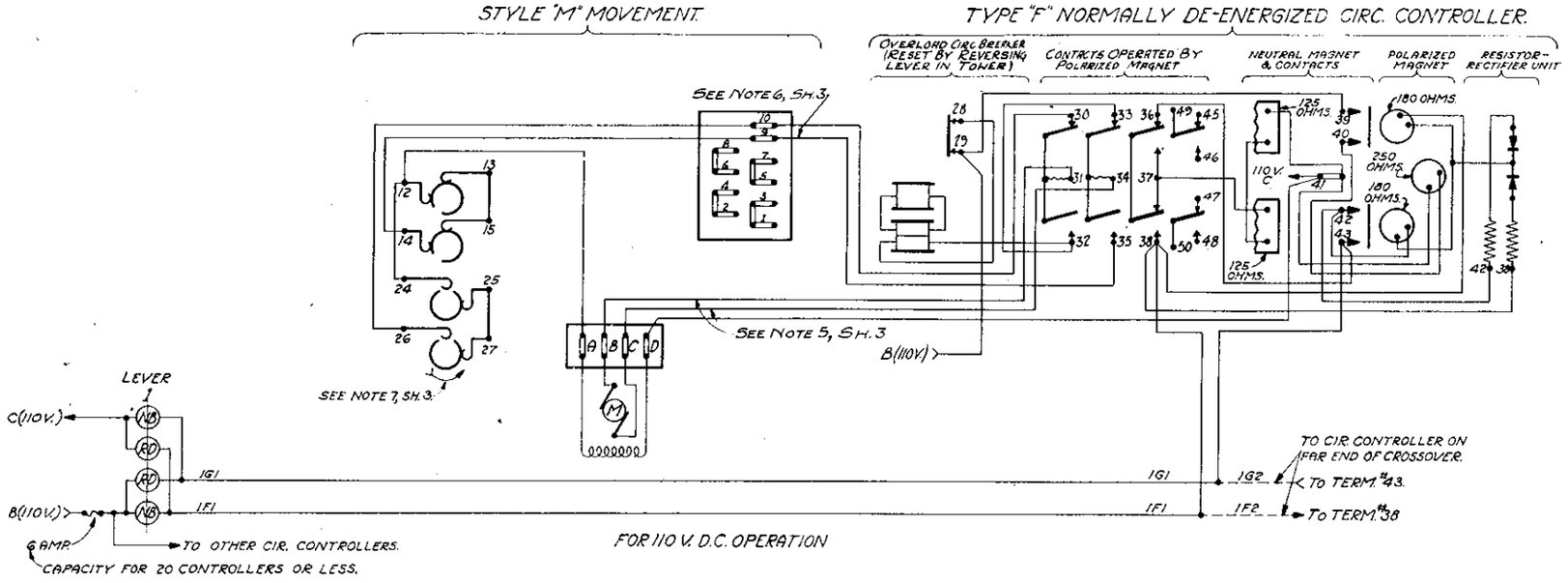

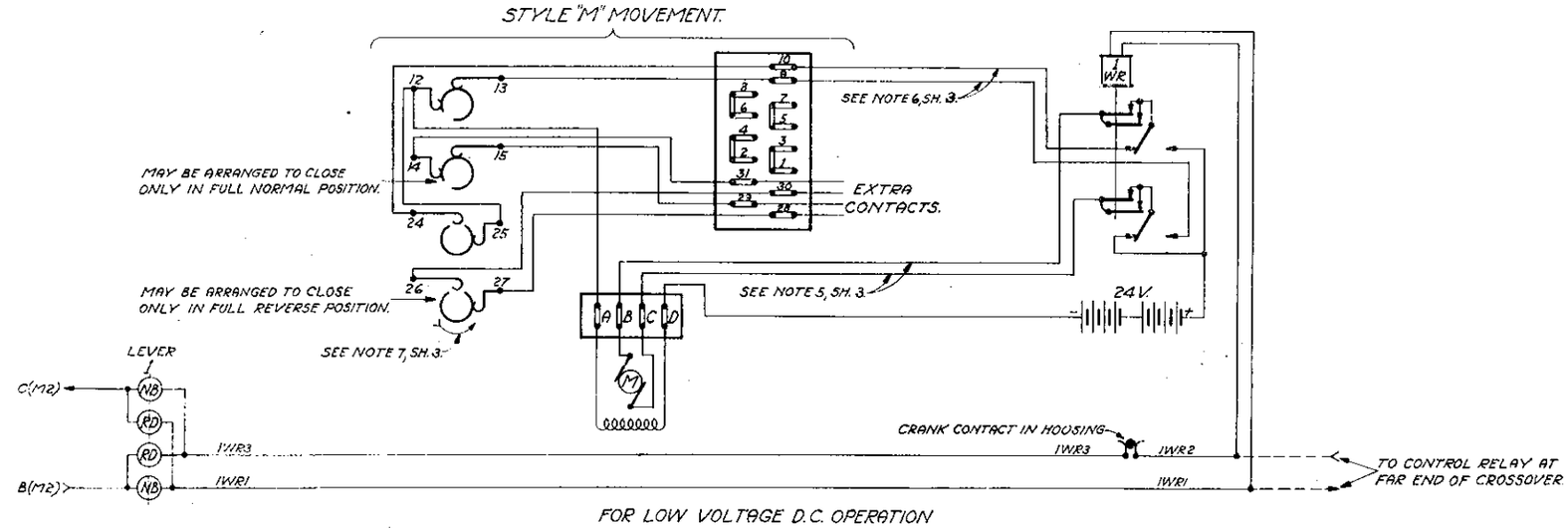

STYLE "M" MOVEMENT.
D.C. OPERATION
FOR EXISTING INSTALLATIONS.

REVISIONS.

6-25-29. RESISTOR-RECTIFIER UNIT ADDED IN TYPE "F" CONTROLLER.
APPROVED:- C. H. Rudd

REDRAWN FROM SH'S 2 & 3 OF PLAN S-823 DATED 12-8-23, SH. 3 LAST REVISED 12-27-24.

SHEET 4 OF 6

S-823

THE PENNSYLVANIA RAILROAD
STANDARD
CIRCUITS FOR ELECTRIC SWITCHES

OFFICE OF CHIEF SIGNAL ENGINEER, PHILA., PA., JUNE 26, 1929

NOT TO SCALE

Approved C. H. Rudd
Chief Signal Engineer

Approved W. S. Mellen
Chief Engineer

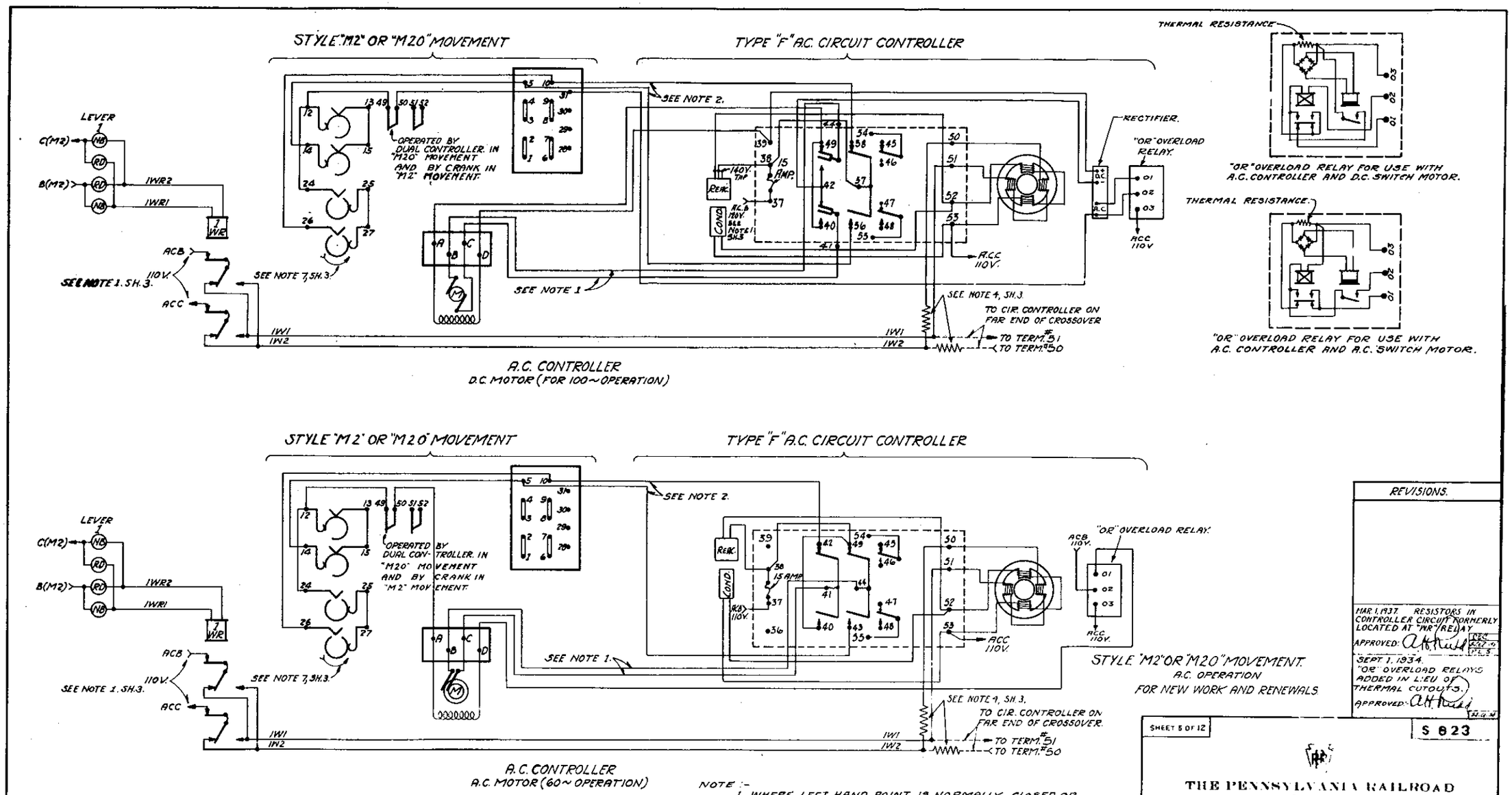

STYLE "M2" OR "M20" MOVEMENT.
A.C. OPERATION
FOR NEW WORK AND RENEWALS

"OR" OVERLOAD RELAYS.
FOR EXISTING INSTALLATIONS, OVERLOAD RELAY MAY BE INSTALLED IN INSTRUMENT CASE IF LOCATED IN CLOSE PROXIMITY TO THE SWITCH MOVEMENT. IF NOT, A NEW CIRCUIT CONTROLLER BOX SHALL BE USED.

NOTE :-
1. WHERE LEFT HAND POINT IS NORMALLY CLOSED OR FOR MOVABLE POINT FROG MOVEMENT, INTERCHANGE LEADS TO B AND C.
2. WHERE LEFT HAND POINT IS NORMALLY CLOSED INTERCHANGE LEADS TO 5 AND 10.

FOR GENERAL NOTES SEE SHEET 3.

REVISIONS.

MAR. 1, 1937. RESISTORS IN CONTROLLER CIRCUIT FORMERLY LOCATED AT "NR" RELAY.
APPROVED: A.H. Rudd

SEPT. 1, 1934. "OR" OVERLOAD RELAYS ADDED IN LIEU OF THERMAL CUTOUTS.
APPROVED: A.H. Rudd

SHEET 5 OF 12

S 823

THE PENNSYLVANIA RAILROAD
STANDARD
CIRCUITS FOR ELECTRIC SWITCHES

Approved: A.H. Rudd
Chief Signal Engineer

Approved: J. Kullman

NOTE :-

A. SWITCH MOVEMENT - M2, M20 OR M22 - CLASS B - 20 VOLT MEDIUM SPEED.

B. CONTACTS ON SWITCH INDICATION CIRCUIT CONTROLLER. - SEE NOTE L.

C. POLARIZED SWITCH CONTROL RELAY WITH 2F & 2B LOW VOLTAGE CONTACTS, 2F HIGH VOLTAGE CONTACTS AND 4N & 4R POLAR CONTACTS, THE HIGH VOLTAGE FRONT CONTACTS BEING ADJUSTED TO OPEN AFTER THE LOW VOLTAGE CONTACTS.

D. DUAL SELECTOR LEVER CONTACT ON M20 OR M22 MOVEMENT OR STICK CONTACT ACTUATED BY HAND CRANK OPERATION ON M2 MOVEMENT WHICH MUST BE MANUALLY RESET.

E. DUAL SELECTOR LEVER CONTACT ON M20 OR M22 MOVEMENT.

F. OR10 OVERLOAD RELAY (NON-STICK TYPE).

G. DUAL SELECTOR AND OVERLOAD STICK REPEATER DN11 RELAY, ONCE OPENED CAN ONLY BE PICKED UP BY OPENING THE "WR" RELAY.

H. WHEN CONTROLLING AN M2 MOVEMENT OMIT CONTACT REFERRED TO IN NOTE E AND CONNECT AS SHOWN BY DOTTED LINE.

J. CONTROL CIRCUITS FOR "WR" RELAYS ARE TYPICAL. COMPLETE CIRCUITS FOR "WR" RELAYS SHALL BE SHOWN ON CIRCUIT PLAN FOR EACH INSTALLATION.

K. ARROW INDICATES DIRECTION OF NEXT ROTATION.

L. SWITCH MACHINE WIRING IS SHOWN FOR A MOVEMENT HAVING A R.H. POINT NORMALLY CLOSED. IF USED FOR A SWITCH HAVING A L.H. POINT NORMALLY CLOSED, INTERCHANGE LEADS TO TERMINALS 'B' & 'C' AND TO TERMINALS 5 & 10 ON MAIN TERMINAL BOARD IN SWITCH MACHINE, ALSO REVERSE THE INDICATION CIRCUIT CONTROLLER CAMS - NOTE B.

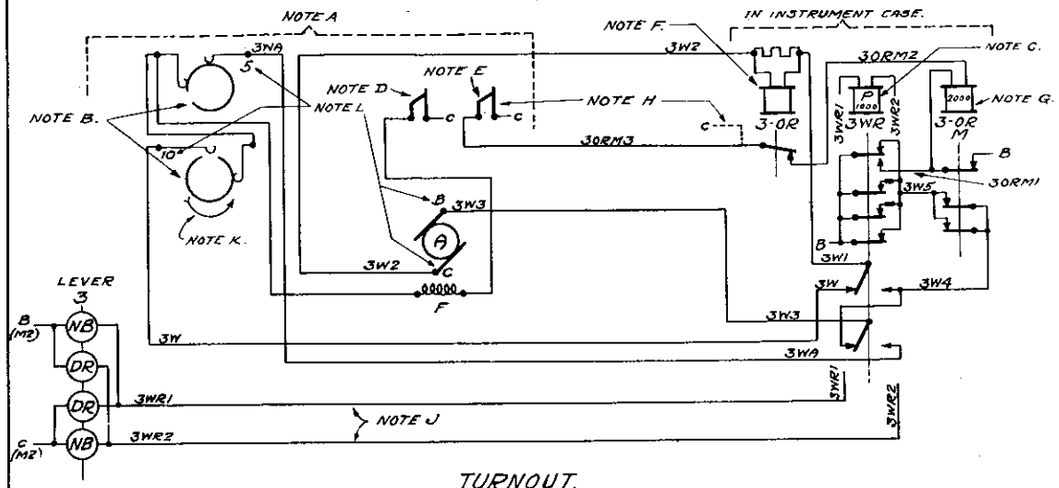

TURNOUT.

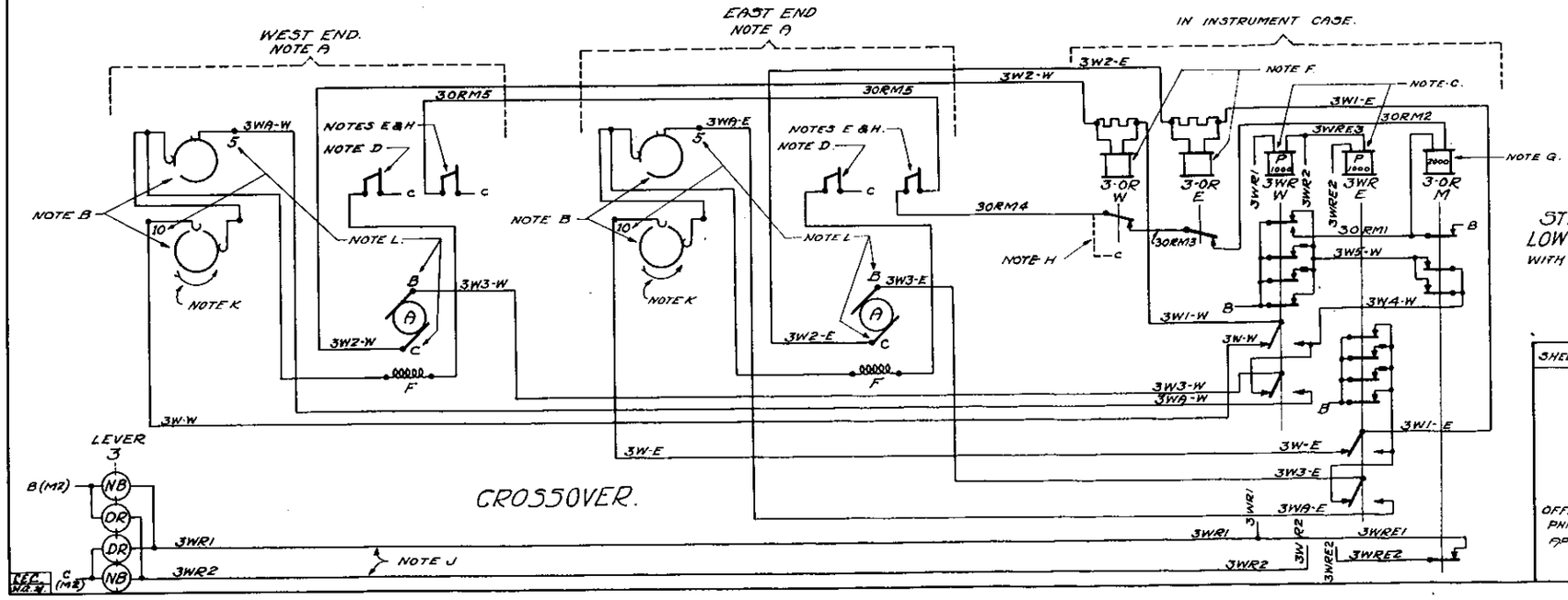

CROSSOVER.

STYLE M2-M20-M22
LOW VOLTAGE MOVEMENTS
WITH OR10 OVERLOAD RELAY.

REVISIONS.

SUPERSEDES SH. 6 OF PLAN S-823 DATED 6-25-29.

SHEET 6 OF 12.

S-823

THE PENNSYLVANIA RAILROAD
STANDARD
CIRCUITS FOR ELECTRIC SWITCHES

OFFICE OF CHIEF SIGNAL ENGINEER.
PHILA., PA., FEB 9, 1937.
APPROVED: D. H. Ford
CHIEF SIGNAL ENGINEER

NOT TO SCALE

APPROVED: W. W. Gibbs
CHIEF ENGINEER.

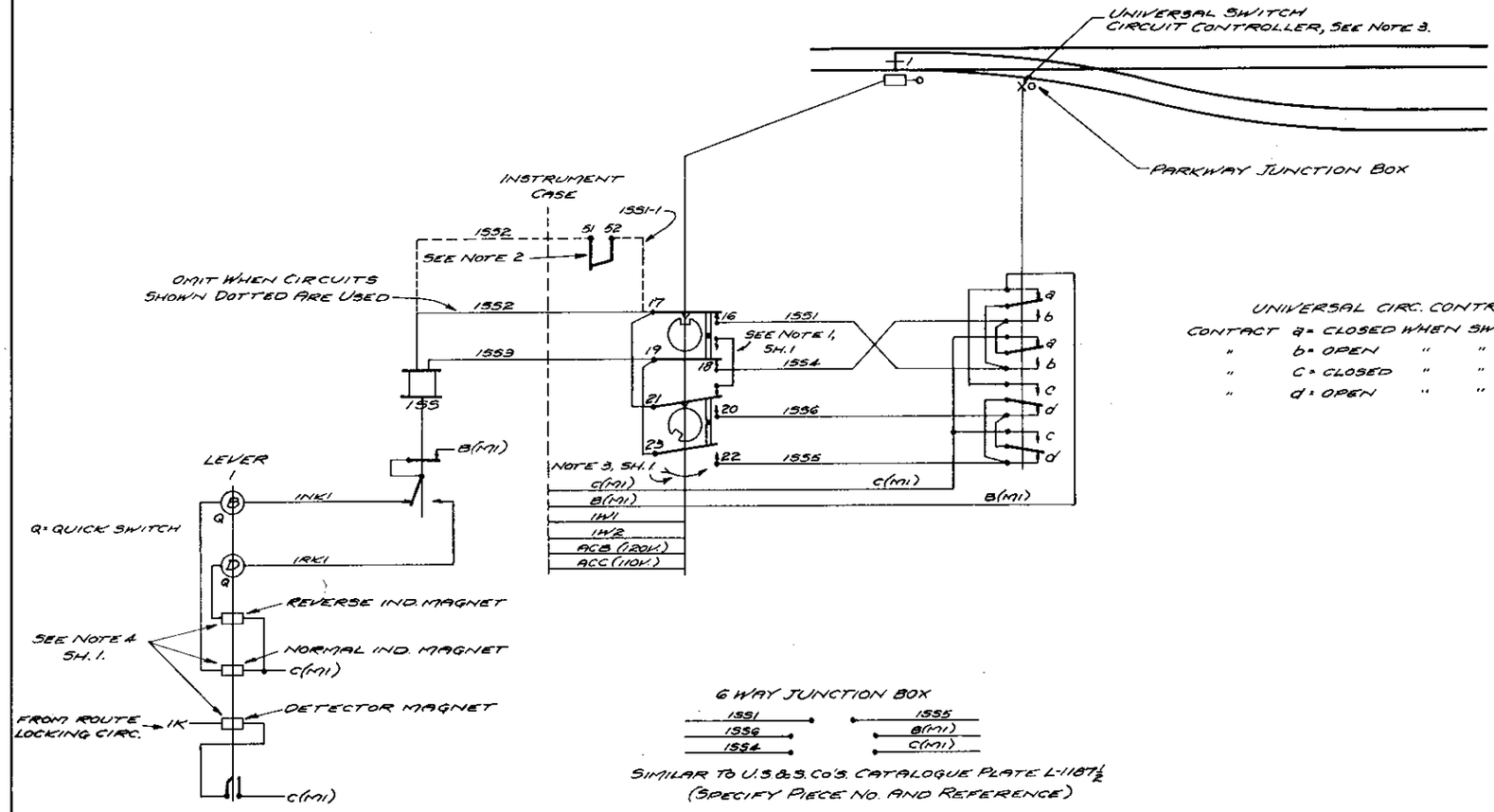

UNIVERSAL CIRC. CONTROLLER

CONTACT a = CLOSED WHEN SW. IS NORMAL
" b = OPEN " " " "
" c = CLOSED " " " REVERSE
" d = OPEN " " " "

STYLE "M", "M2", "M20", "M22" MOVEMENTS
SWITCH INDICATION AND
"55" CONTROL CIRCUITS
(WITH QUICK SWITCH)
WHERE
45° SWITCH POINTS
ARE USED
AND
UNIVERSAL CIRCUIT
CONTROLLER PROVIDED

NOTE:-

1. FOR GENERAL NOTES SEE SHEET No. 1.
2. CIRCUITS SHOWN IN DOTTED LINES SHALL BE PROVIDED WHERE "M2", "M20" OR "M22" MOVEMENTS ARE USED, CIRCUIT CONTROLLER BEING OPERATED BY SELECTOR LEVER IN "M20" OR "M22" AND BY CRANK IN "M2" MOVEMENTS.
3. SWITCH CIRCUIT CONTROLLER SHALL BE IN ACCORDANCE WITH U.S.&S. CO'S CATALOGUE PLATE J-1001, PIECE 116478 REFERENCE "B" USING CRANK REFERENCE 31, PLATE J-1010.

REVISIONS

SHEET 7 OF 12

S-823

THE PENNSYLVANIA RAILROAD
STANDARD
CIRCUITS FOR ELECTRIC SWITCHES

OFFICE OF CHIEF SIGNAL ENGINEER
PHILA., PA., SEPT. 5, 1935.

NOT TO SCALE

Approved:
Chief Signal Engineer

Approved:
Chief Engineer

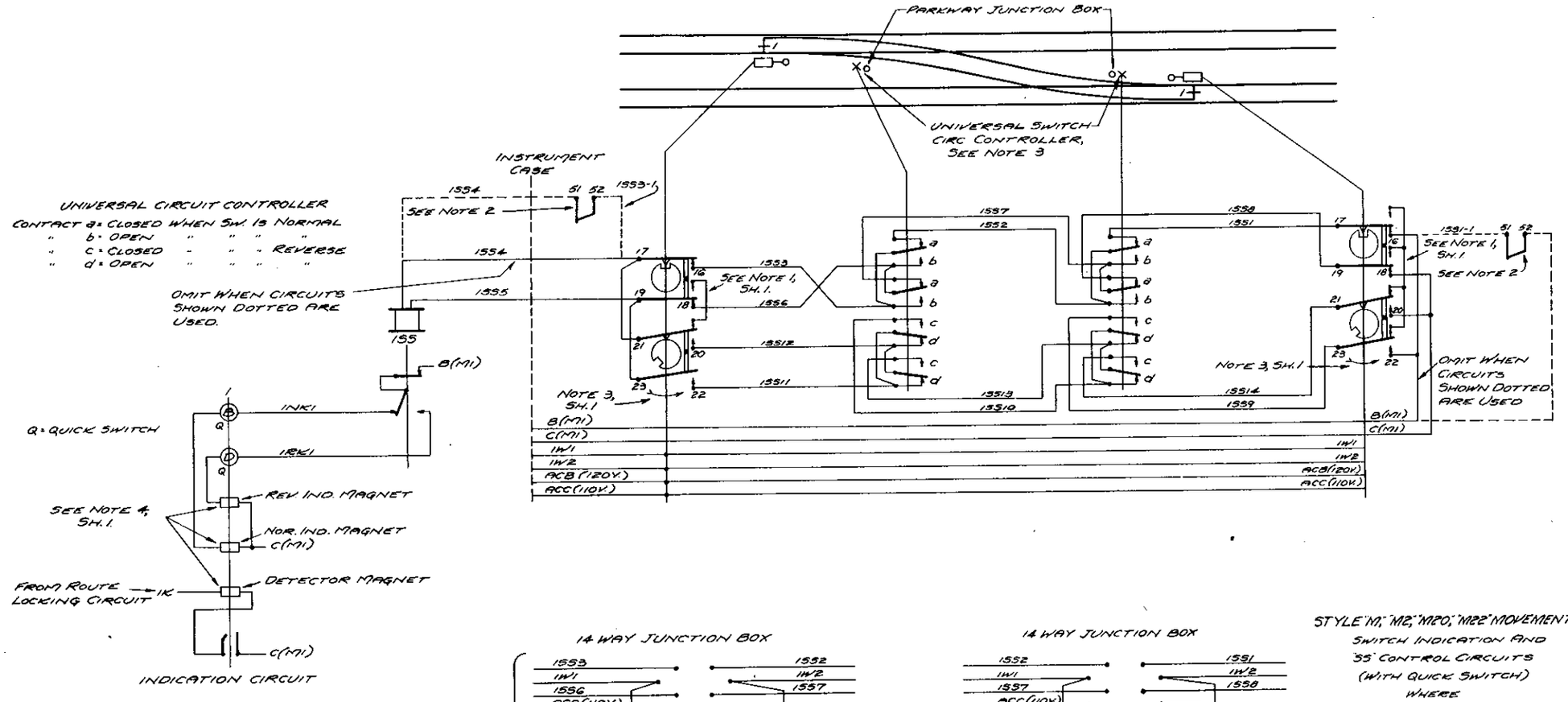

SIMILAR TO U.S.&S. CO'S. CATALOGUE PLATE L-1250
(SPECIFY PIECE NO. AND REFERENCE)

STYLE "M", "M2", "M20", "M22" MOVEMENTS
SWITCH INDICATION AND
"SS" CONTROL CIRCUITS
(WITH QUICK SWITCH)
WHERE
45° SWITCH POINTS
ARE USED
AND
UNIVERSAL CIRCUIT
CONTROLLERS PROVIDED

NOTE:-
1. FOR GENERAL NOTES SEE SHEET NO. 1.
2. CIRCUITS SHOWN IN DOTTED LINES SHALL BE PROVIDED WHERE "M2", "M20" OR "M22" MOVEMENTS ARE USED, CIRCUIT CONTROLLER BEING OPERATED BY SELECTOR LEVER IN "M20" OR "M22" AND BY CRANK IN "M2" MOVEMENTS.
3. SWITCH CIRCUIT CONTROLLER SHALL BE IN ACCORDANCE WITH U.S.&S. CO'S CATALOGUE PLATE J-1001, PIECE 116478 REFERENCE "B" USING CRANK REFERENCE 31, PLATE J-1010.

REVISIONS

SHEET 8 OF 12

S-823

THE PENNSYLVANIA RAILROAD
STANDARD
CIRCUITS FOR ELECTRIC SWITCHES

OFFICE OF CHIEF SIGNAL ENGINEER
PHILA., PA., SEPT. 5, 1955.

NOT TO SCALE

Approved: Chief Signal Engineer

Approved: Chief Engineer

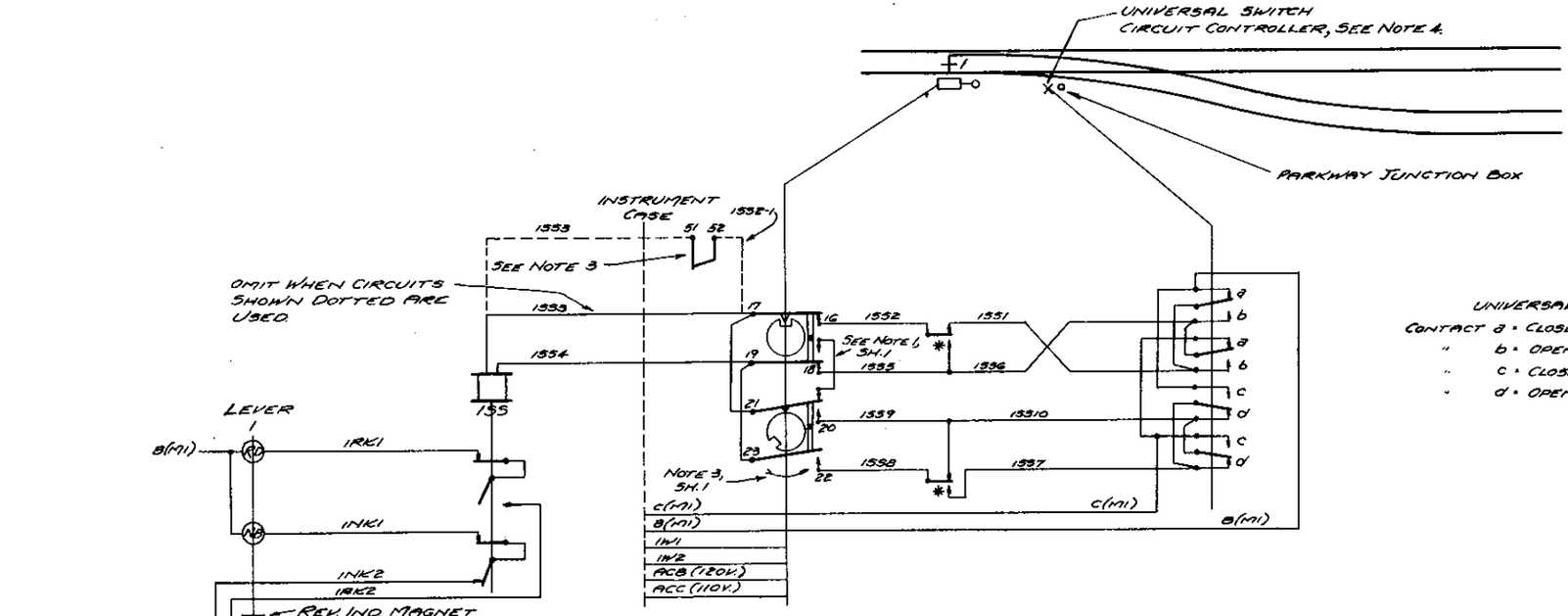

UNIVERSAL CIRCUIT CONTROLLER

CONTACT a = CLOSED WHEN SW. IS NORMAL
" b = OPEN " " " "
" c = CLOSED " " " REVERSE
" d = OPEN " " " "

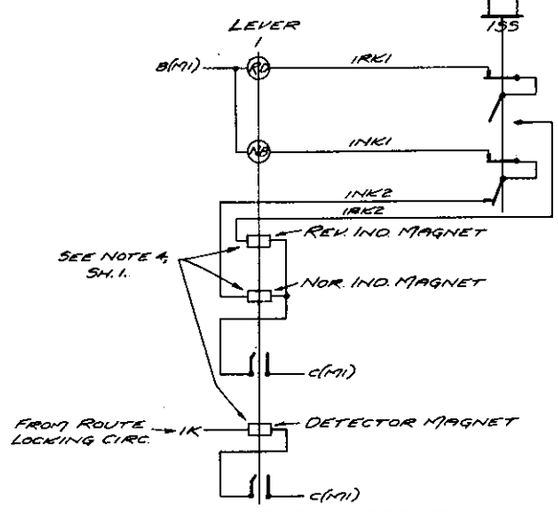

INDICATION CIRCUIT
INTERLOCKING MACHINE LEVER

6 WAY JUNCTION BOX

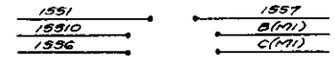

SIMILAR TO U.S.&S. CO'S. CATALOGUE PLATE L-1187½
(SPECIFY PIECE NO. AND REFERENCE)

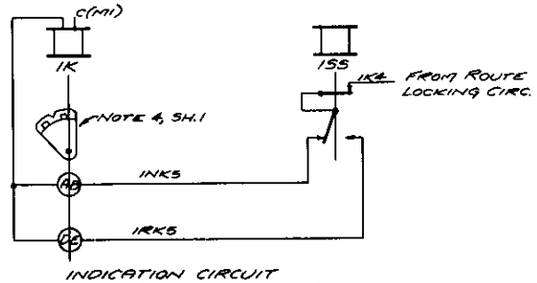

INDICATION CIRCUIT
TABLE INTERLOCKER LEVER

NOTE:-
1. * = CONTACTS ON TYPE 'F' CONTROLLER
2. FOR GENERAL NOTES SEE SHEET NO. 1.
3. CIRCUITS SHOWN IN DOTTED LINES SHALL BE PROVIDED WHERE 'M2', 'M20' OR 'M22' MOVEMENTS ARE USED, CIRCUIT CONTROLLER BEING OPERATED BY SELECTOR LEVER IN 'M20' OR 'M22' AND BY CRANK IN 'M2' MOVEMENTS.
4. SWITCH CIRCUIT CONTROLLER SHALL BE IN ACCORDANCE WITH U.S.&S. CO'S CATALOGUE PLATE J-1001, PIECE 116478, REFERENCE 'B' USING CRANK REFERENCE 31, PLATE J-1010.

STYLE 'M', 'M2', 'M20', 'M22' MOVEMENTS
SWITCH INDICATION AND
'55' CONTROL CIRCUITS
(WITHOUT QUICK SWITCH)
WHERE
45' SWITCH POINTS
ARE USED
AND
UNIVERSAL CIRCUIT
CONTROLLER PROVIDED

REVISIONS

SHEET 9 OF 12

S-823

THE PENNSYLVANIA RAILROAD
STANDARD
CIRCUITS FOR ELECTRIC SWITCHES

OFFICE OF CHIEF SIGNAL ENGINEER
PHILA., PA., SEPT. 5, 1935.

NOT TO SCALE

Approved: A H Rudd
Chief Signal Engineer

Approved: T. J. Skillman
Chief Engineer

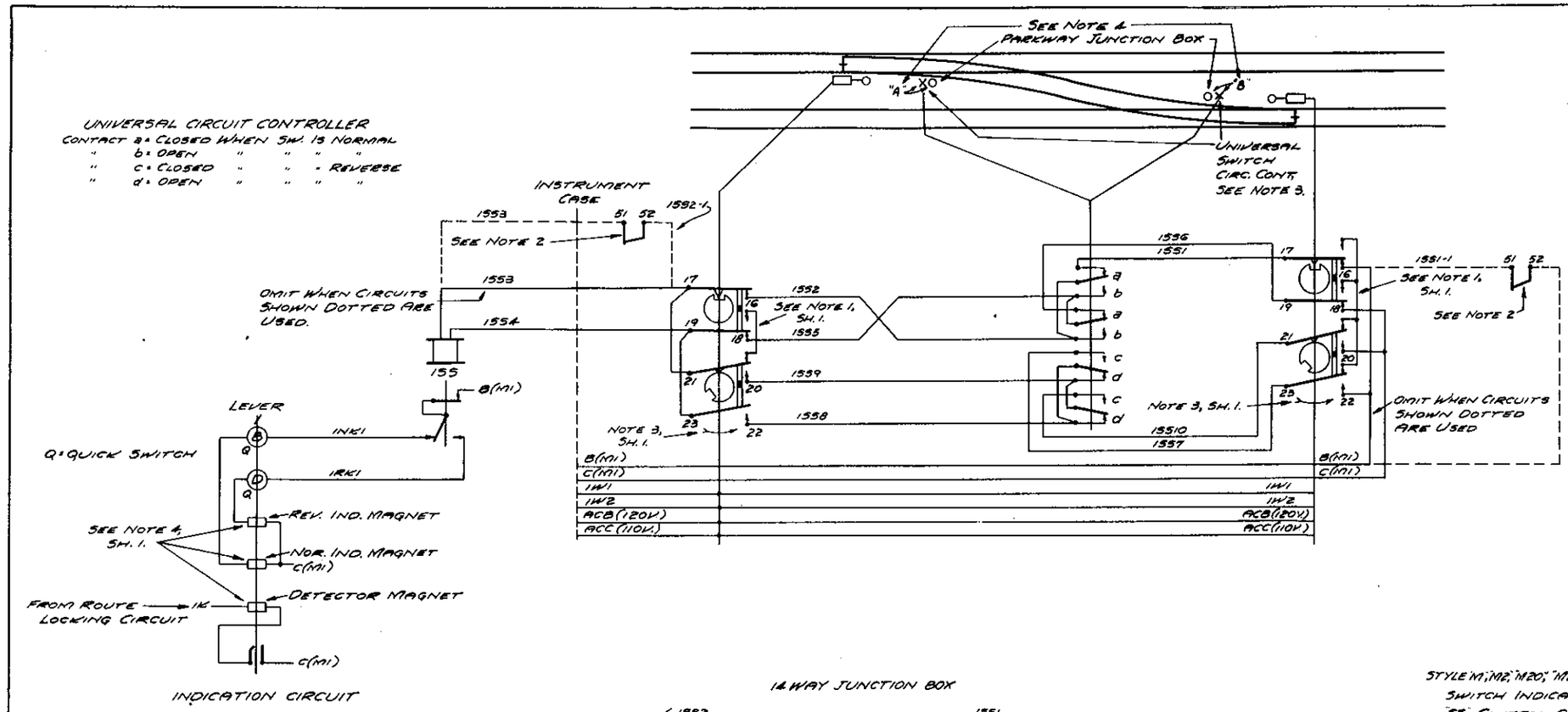

SIMILAR TO U.S. & S. CO'S. CATALOGUE PLATE L-1250.
(SPECIFY PIECE NO. AND REFERENCE)

NOTE:-
1. FOR GENERAL NOTES SEE SHEET NO. 1.
2. CIRCUITS SHOWN IN DOTTED LINES SHALL BE PROVIDED WHERE "M2", "M20" OR "M22" MOVEMENTS ARE USED, CIRCUIT CONTROLLER BEING OPERATED BY SELECTOR LEVER IN "M20" OR "M22" AND BY CRANK IN "M2" MOVEMENTS.
3. SWITCH CIRCUIT CONTROLLER SHALL BE IN ACCORDANCE WITH U.S. & S. CO'S. CATALOGUE PLATE J-1001, PIECE 116478, REFERENCE "B" USING CRANK REFERENCE 31, PLATE J-1010.
4. WHERE 45' SWITCH POINTS ARE LOCATED ON NEAR END OF CROSSOVER ONLY CIRCUIT CONTROLLER AND JUNCTION BOX MARKED "A" SHALL BE PROVIDED AND WHERE 45' SWITCH POINTS ARE LOCATED ON FAR END OF CROSSOVER ONLY CIRCUIT CONTROLLER AND JUNCTION BOX MARKED "B" SHALL BE PROVIDED.

STYLE "M", "M2", "M20", "M22" MOVEMENTS
SWITCH INDICATION AND
55' CONTROL CIRCUITS
(WITH QUICK SWITCH)
WHERE
45' SWITCH POINT
IS USED
ON ONE END ONLY
AND
UNIVERSAL CIRCUIT
CONTROLLER PROVIDED.

REVISIONS

SHEET 11 OF 12

S-823

THE PENNSYLVANIA RAILROAD
STANDARD
CIRCUITS FOR ELECTRIC SWITCHES

OFFICE OF CHIEF SIGNAL ENGINEER
PHILA., PA., SEPT. 5, 1955

NOT TO SCALE

Approved: Chief Signal Engineer

Approved: Chief Engineer

K.E.
H.O.Y.
C.J.B.
E.L.S.

UNIVERSAL CIRCUIT CONTROLLER
CONTACT a = CLOSED WHEN SW. IS NORMAL.
" b = OPEN " " " "
" c = CLOSED " " " REVERSE
" d = OPEN " " " "

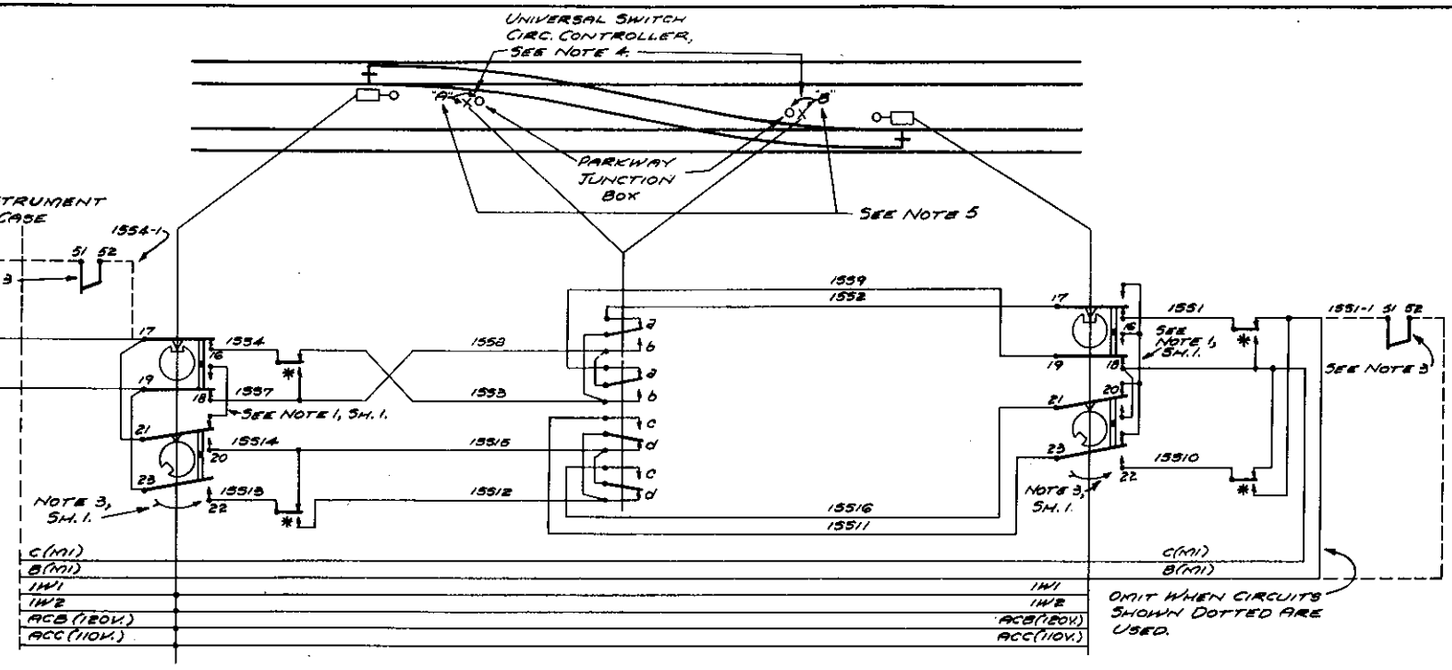

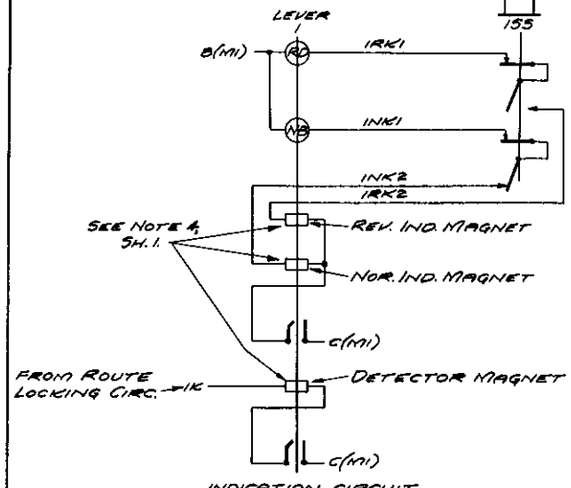

INDICATION CIRCUIT
INTERLOCKING MACHINE LEVER

14 WAY JUNCTION BOX

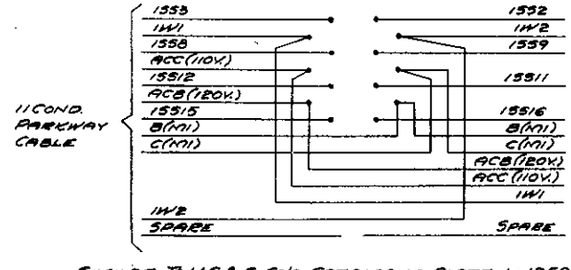

SIMILAR TO U.S.&S. CO'S. CATALOGUE PLATE L-1250
(SPECIFY PIECE NO. AND REFERENCE)

STYLE "M", "M2", "M20" "M22" MOVEMENTS
SWITCH INDICATION AND
"55" CONTROL CIRCUITS
(WITHOUT QUICK SWITCH)
WHERE
45' SWITCH POINT
IS USED
ON ONE END ONLY
AND
UNIVERSAL CIRCUIT
CONTROLLERS PROVIDED

REVISIONS

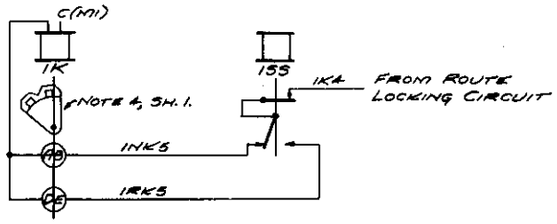

INDICATION CIRCUIT
TABLE INTERLOCKER LEVER

NOTE:-
1. * = CONTACTS ON TYPE "F" CONTROLLER.
2. FOR GENERAL NOTES SEE SHEET NO. 1.
3. CIRCUITS SHOWN IN DOTTED LINES SHALL BE PROVIDED WHERE "M2", "M20" OR "M22" MOVEMENTS ARE USED, CIRCUIT CONTROLLER BEING OPERATED BY SELECTOR LEVER IN "M20" OR "M22" AND BY CRANK IN "M2" MOVEMENTS.
4. SWITCH CIRCUIT CONTROLLER SHALL BE IN ACCORDANCE WITH U.S.&S. CO'S. CATALOGUE PLATE J-1001, PIECE 116 & 78, REFERENCE "B" USING CRANK REFERENCE 31, PLATE J-1010.
5. WHERE 45' SWITCH POINTS ARE LOCATED ON NEAR END OF CROSSOVER ONLY CIRCUIT CONTROLLER AND JUNCTION BOX MARKED "A" SHALL BE PROVIDED AND WHERE 45' SWITCH POINTS ARE LOCATED ON FAR END OF CROSSOVER ONLY CIRCUIT CONTROLLER AND JUNCTION BOX MARKED "B" SHALL BE PROVIDED.

SHEET 12 OF 12

S-823

THE PENNSYLVANIA RAILROAD
STANDARD
CIRCUITS FOR ELECTRIC SWITCHES

OFFICE OF CHIEF SIGNAL ENGINEER
PHILA., PA., SEPT. 5, 1935.

NOT TO SCALE

Approved:
Chief Signal Engineer

Approved:
Chief Engineer

	MODEL 14 POWER MACHINE (ELECTRO-PNEU. OR ELECTRIC) OR STYLE "P5" ELECTRO-MECHANICAL	STYLE "S-8" STYLE "P-3" OLD STYLE TYPE "F"	STYLE "S-7" OLD STYLE ELECTRO-PNEU. STYLE "P"	STYLE "P-4"
SIGNAL LEVER (NORMAL IN CENTER) TRAFFIC LEVER SWITCH DETECTOR SEGMENT FOR POWER SWITCH	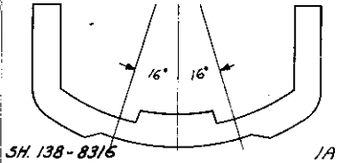 SH. 138-8316 1A	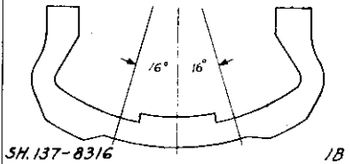 SH. 137-8316 1B	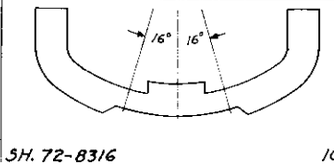 SH. 72-8316 1C	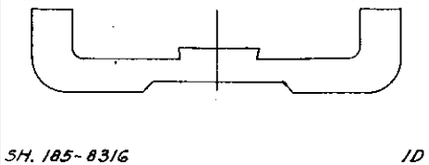 SH. 185-8316 1D
SIGNAL LEVER (NORMAL IN EXTREME END POSITION) OR INDICATION FOR ELECTRIC SW. LOCK WHERE LEVER IS NORMAL IN EXTREME POSITION.	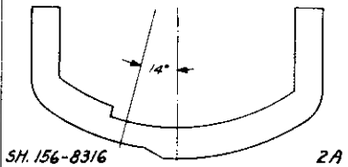 SH. 156-8316 2A	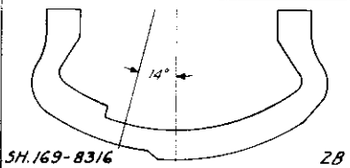 SH. 169-8316 2B	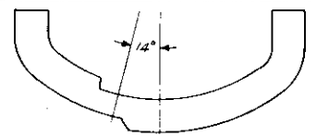 SH. 158-8316 2C	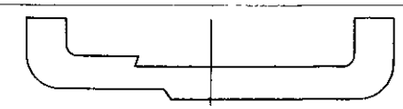 SH. 193-8316 2D
SWITCH INDICATION SEGMENT FOR POWER SWITCH (WHERE QUICK SWITCH IS PROVIDED)	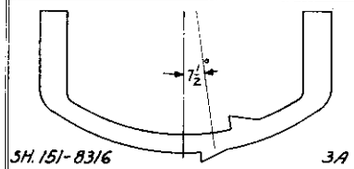 SH. 151-8316 3A	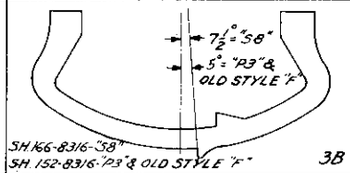 SH. 166-8316-"S8" SH. 152-8316-"P3" & OLD STYLE "F" 3B	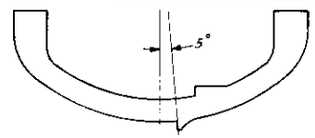 SH. 1-8316 3C	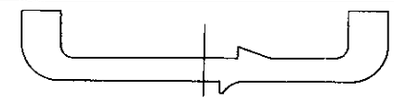 SH. 172-8316 3D
SWITCH INDICATION LEVER (ELECTRO-MECHANICAL SWITCH)	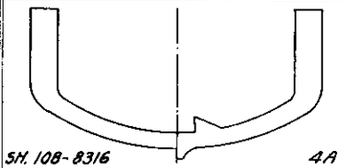 SH. 108-8316 4A	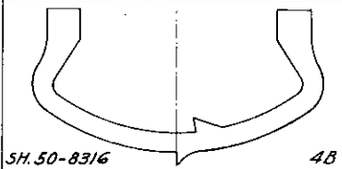 SH. 50-8316 4B	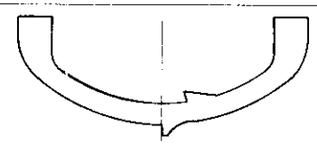 SH. 43-8316 4C	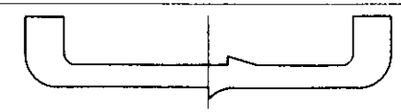 SH. 64-8316 4D
SWITCH INDICATION SEGMENT FOR POWER SWITCH (WITHOUT QUICK SWITCH)	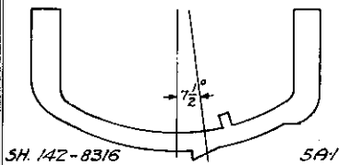 SH. 142-8316 5A-1	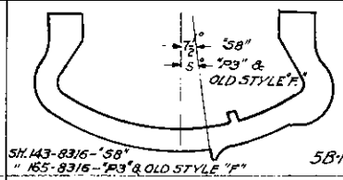 SH. 143-8316-"S8" " 165-8316-"P3" & OLD STYLE "F" 5B-1	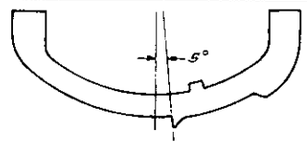 SH. 159-8316 5C-1	 5D-1
SWITCH DETECTOR SEGMENT (ELECTRO-MECHANICAL SWITCH)	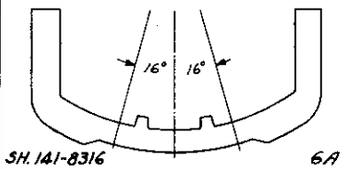 SH. 141-8316 6A	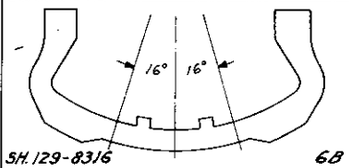 SH. 129-8316 6B	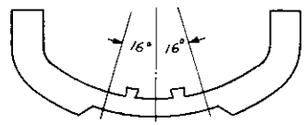 SH. 170-8316 6C	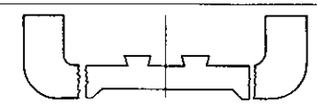 SH. 187-8316 6D
SEGMENT TO PREVENT LEVER FROM BEING MOVED TO LEFT OR RIGHT.	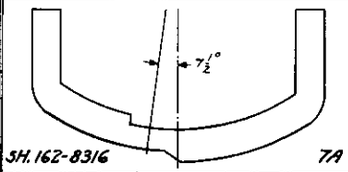 SH. 162-8316 7A	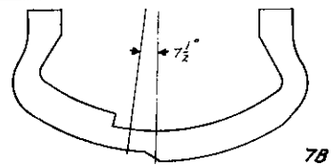 7B	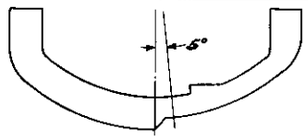 SH. 181-8316 7C	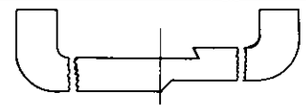 7D

NOTE:

1. WHERE SEGMENT WITH FORCED DOWN FEATURE IS PROVIDED A LATCH WITH LOWER FACE BEVELED SHALL BE PROVIDED.
2. QUADRANTS MUST BE SELECTED WITH NOTCHES ARRANGED IN ACCORDANCE WITH THE CUT OF THE SEGMENT WITH PROPER CONSIDERATION FOR THE LATCH CIRCUIT CONTROLLER, IF PROVIDED.
3. SEGMENTS SHOWN ARE FOR INTERLOCKING MACHINES MANUFACTURED BY THE UNION SWITCH & SIGNAL CO.
4. SH. 138-8316, 156-8316, ETC. REFERS TO THE UNION SWITCH & SIGNAL CO'S. DRAWING NUMBERS.

INTERLOCKING MACHINE

REVISIONS.

12-14-29-SW. DETECTOR SEGMENTS 1A, 1B, 1C & 1D FORMERLY SHOWN AS 5A, 5B, 5C & 5D. SEGMENTS 5A-1, 5B-1, 5C-1 AND 5D-1 ADDED.

APPROVED

SHEET 1 OF 2

S-824

THE PENNSYLVANIA RAILROAD
STANDARD
SEGMENTS

OFFICE OF CHIEF SIGNAL ENGINEER
PHILA., PA., JULY 19, 1928.

NOT TO SCALE

Approved
Chief Signal Engineer

Approved
Chief Engineer

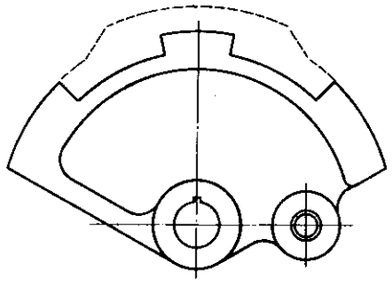

SIGNAL LEVER
(NORMAL IN CENTER)
OR
TRAFFIC LEVER
U.S.&S. CO. SH. 2-12592
G.R.S. CO. 13174-7.
FIG. 8

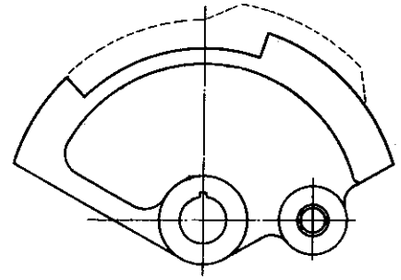

SIGNAL LEVER
(NORMAL IN LEFT POSITION)
U.S.&S. CO. SH. 4-12592
" " 7-12592 - USED WITH
3 POSITION DEVICE.
G.R.S. CO. 13174-19.
FIG. 9

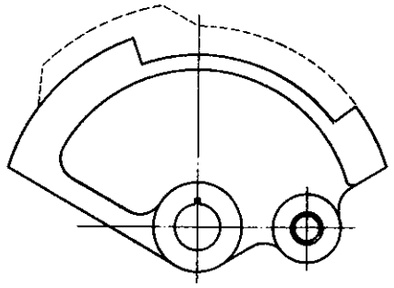

SIGNAL LEVER
(NORMAL IN RIGHT POSITION)
U.S.&S. CO. SH. 5-12592
" " 8-12592-USED WITH
3 POSITION DEVICE.
G.R.S. CO. 13174-18
FIG. 10

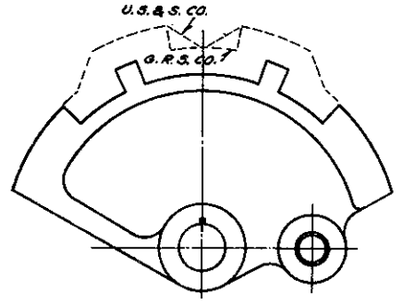

SWITCH LEVER
U.S.&S. CO. SH. 3-12592
G.R.S. CO. 13174-16.
FIG. 11

REVISIONS.

TABLE INTERLOCKER

SHEET 2 OF 2

S-824

THE PENNSYLVANIA RAILROAD
STANDARD
SEGMENTS

OFFICE OF CHIEF SIGNAL ENGINEER
PHILA., PA., JULY 15, 1926.

NOT TO SCALE

Approved
Chief Signal Engineer

Approved
Chief Engineer

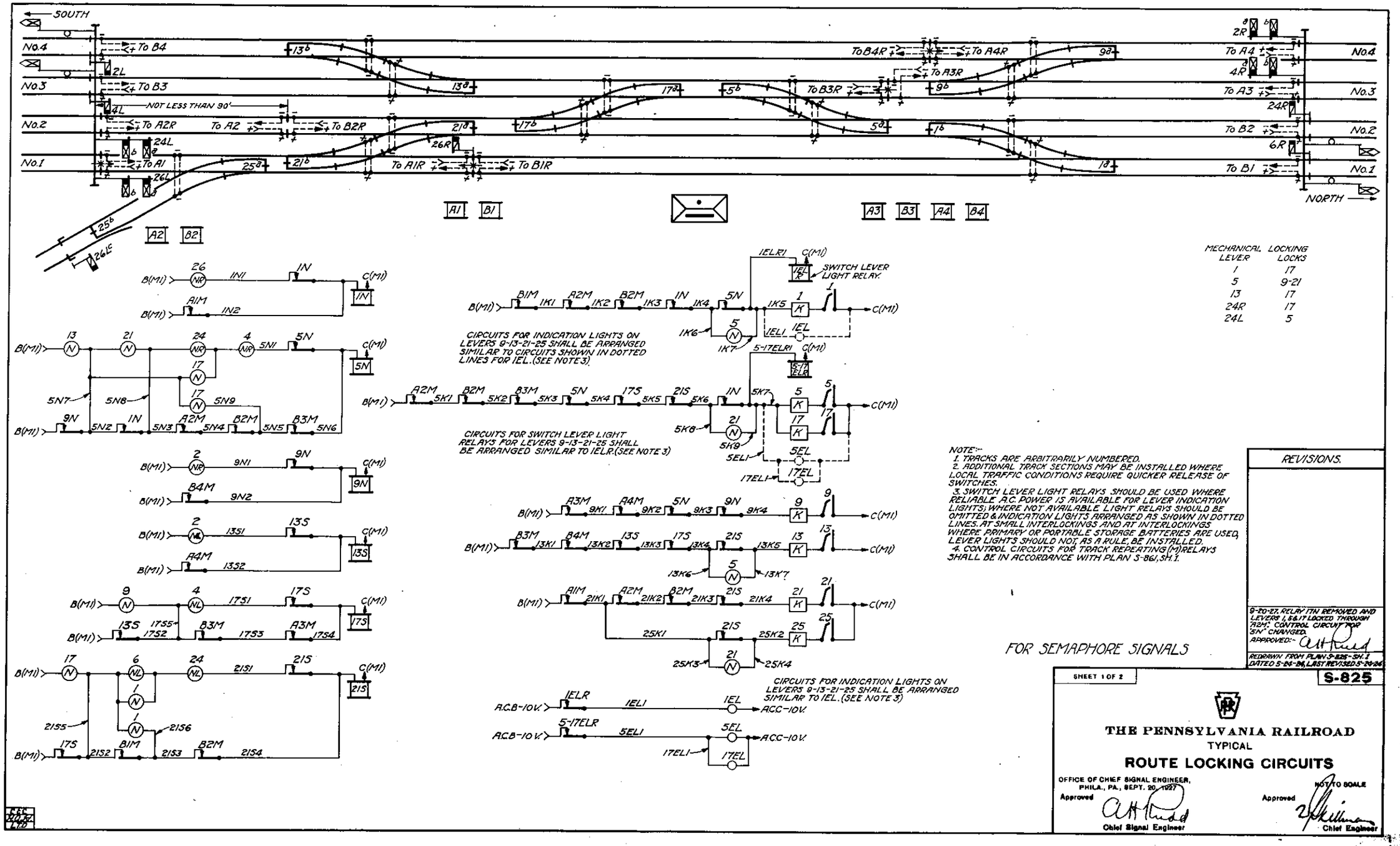

MECHANICAL LEVER	LOCKING LOCKS
1	17
5	9-21
13	17
24R	17
24L	5

NOTE:-
1. TRACKS ARE ARBITRARILY NUMBERED.
2. ADDITIONAL TRACK SECTIONS MAY BE INSTALLED WHERE LOCAL TRAFFIC CONDITIONS REQUIRE QUICKER RELEASE OF SWITCHES.
3. SWITCH LEVER LIGHT RELAYS SHOULD BE USED WHERE RELIABLE A.C. POWER IS AVAILABLE FOR LEVER INDICATION LIGHTS; WHERE NOT AVAILABLE LIGHT RELAYS SHOULD BE OMITTED & INDICATION LIGHTS ARRANGED AS SHOWN IN DOTTED LINES. AT SMALL INTERLOCKINGS AND AT INTERLOCKINGS WHERE PRIMARY OR PORTABLE STORAGE BATTERIES ARE USED, LEVER LIGHTS SHOULD NOT, AS A RULE, BE INSTALLED.
4. CONTROL CIRCUITS FOR TRACK REPEATING (M) RELAYS SHALL BE IN ACCORDANCE WITH PLAN S-861, SH. 1.

FOR SEMAPHORE SIGNALS

REVISIONS.

9-20-27. RELAY "1TN" REMOVED AND LEVERS 1, 5 & 17 LOCKED THROUGH "R2M" CONTROL CIRCUIT FOR "5N" CHANGED.
APPROVED:- A H Rudd

REDRAWN FROM PLAN S-825-SH. 1 DATED 5-24-26, LAST REVISED 5-24-26

SHEET 1 OF 2

S-825

THE PENNSYLVANIA RAILROAD
TYPICAL
ROUTE LOCKING CIRCUITS

OFFICE OF CHIEF SIGNAL ENGINEER,
PHILA., PA., SEPT. 20, 1927

NOT TO SCALE

Approved A H Rudd
Chief Signal Engineer

Approved W W Atterbury
Chief Engineer

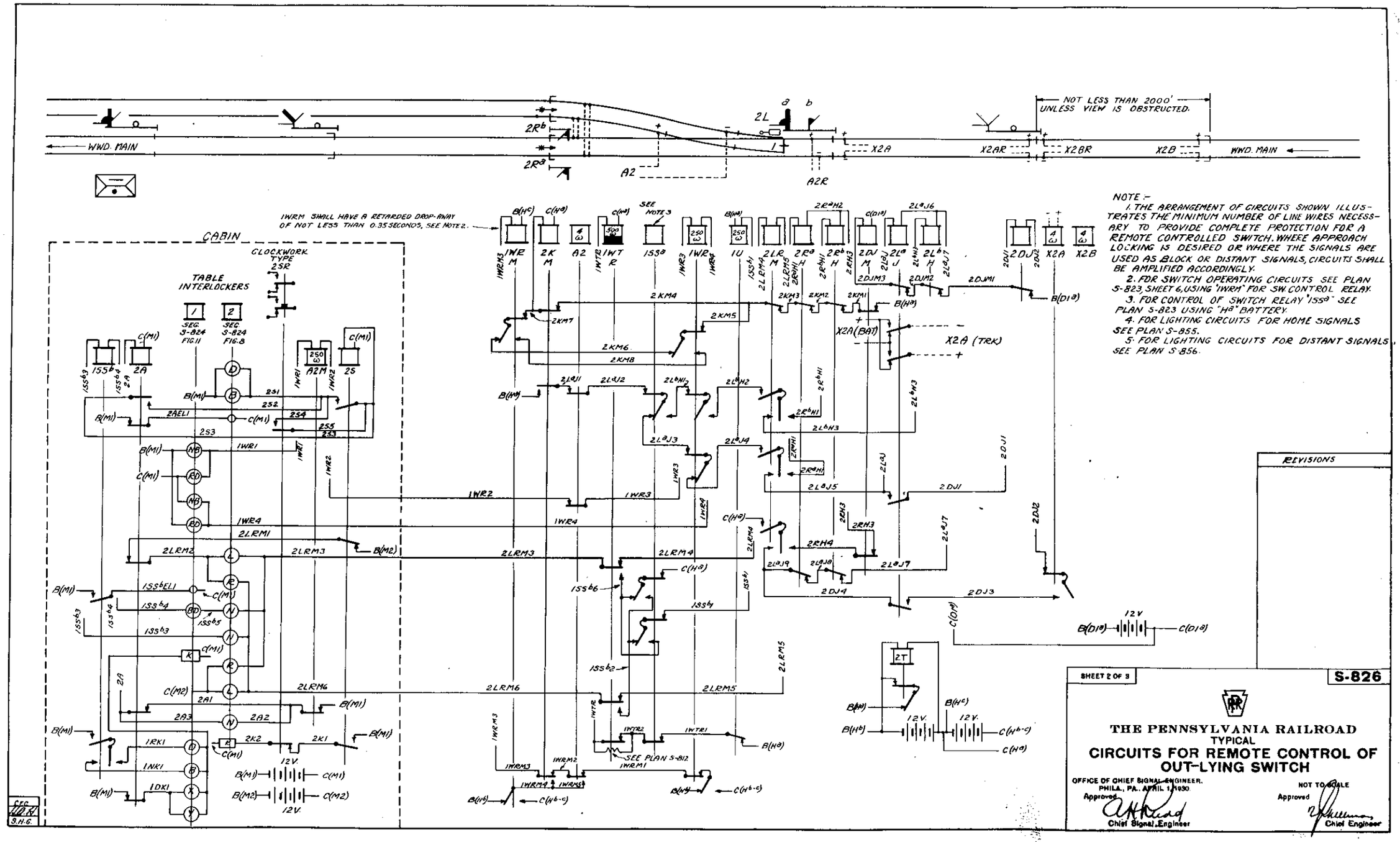
WWD. MAIN
2R^b
2R^a
A2
2L
a
b
X2A
X2AR
X2BR
X2B
A2R
NOT LESS THAN 2000' UNLESS VIEW IS OBSTRUCTED.
WWD. MAIN
1WRM SHALL HAVE A RETARDED DROP-AWAY OF NOT LESS THAN 0.35 SECONDS, SEE NOTE 2.
CABIN
CLOCKWORK TYPE 2SR
TABLE INTERLOCKERS
SEG. 3-824 FIG. 11
SEG. 3-824 FIG. 8
SEE NOTE 3
SEE PLAN S-812
X2A(BAT)
X2A (TRK)
12V.
NOTE:-
1. THE ARRANGEMENT OF CIRCUITS SHOWN ILLUSTRATES THE MINIMUM NUMBER OF LINE WIRES NECESSARY TO PROVIDE COMPLETE PROTECTION FOR A REMOTE CONTROLLED SWITCH. WHERE APPROACH LOCKING IS DESIRED OR WHERE THE SIGNALS ARE USED AS BLOCK OR DISTANT SIGNALS, CIRCUITS SHALL BE AMPLIFIED ACCORDINGLY.
2. FOR SWITCH OPERATING CIRCUITS SEE PLAN S-823, SHEET 6, USING "1WRM" FOR SW. CONTROL RELAY.
3. FOR CONTROL OF SWITCH RELAY "1SS^a" SEE PLAN S-823 USING "H^a" BATTERY.
4. FOR LIGHTING CIRCUITS FOR HOME SIGNALS SEE PLAN S-855.
5. FOR LIGHTING CIRCUITS FOR DISTANT SIGNALS SEE PLAN S-856.
REVISIONS
SHEET 2 OF 3
S-826
THE PENNSYLVANIA RAILROAD
TYPICAL
CIRCUITS FOR REMOTE CONTROL OF OUT-LYING SWITCH
OFFICE OF CHIEF SIGNAL ENGINEER.
PHILA., PA., APRIL 1, 1930.
NOT TO SCALE
Approved
Chief Signal Engineer
Approved
Chief Engineer
S.H.G.

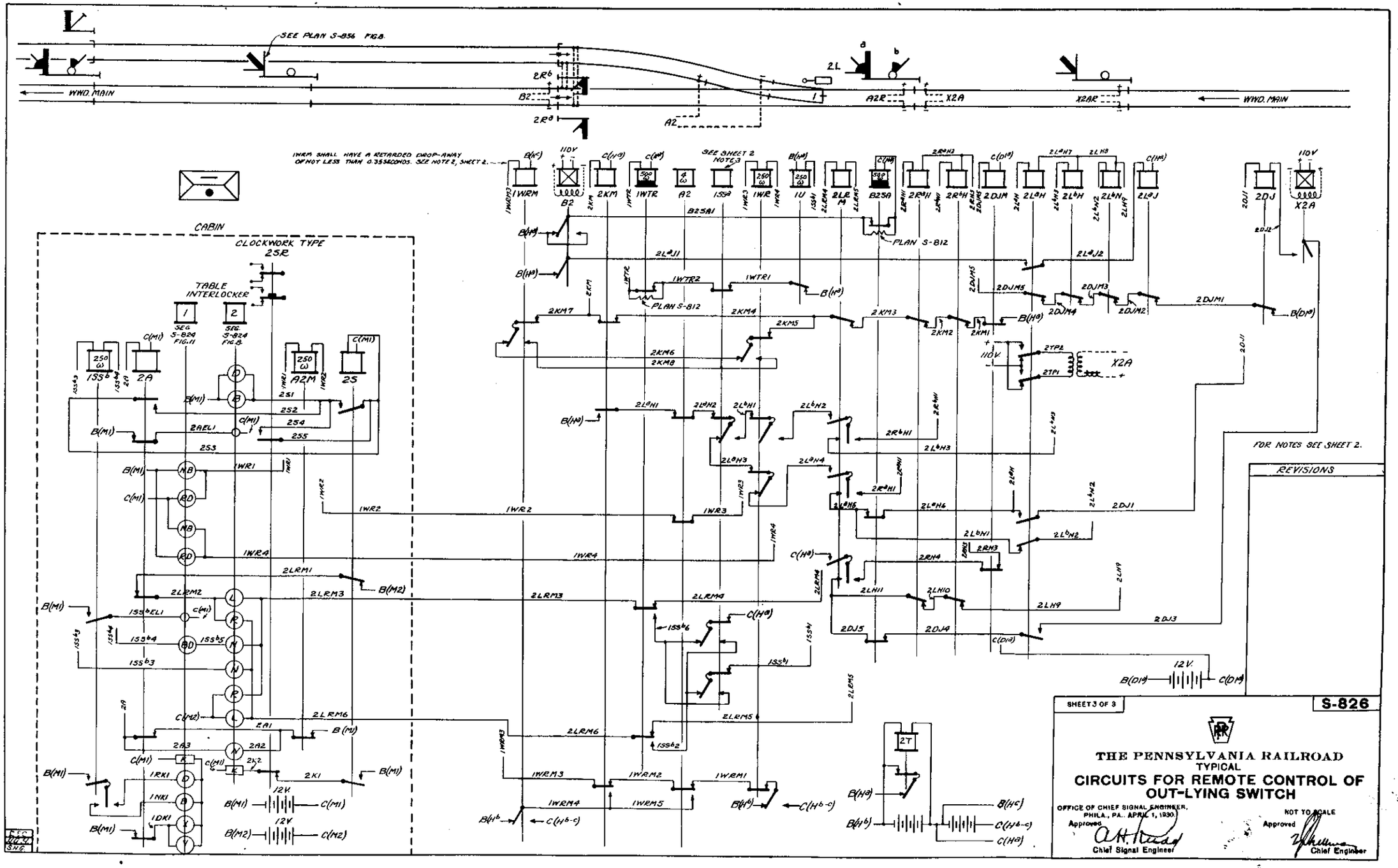
SEE PLAN S-856 FIG.B.
WWD. MAIN
WWD. MAIN
IWRM SHALL HAVE A RETARDED DROP-AWAY OF NOT LESS THAN 0.35 SECONDS. SEE NOTE 2, SHEET 2.
SEE SHEET 2 NOTE 3
PLAN S-812
PLAN S-812
CABIN
CLOCKWORK TYPE
2SR
TABLE INTERLOCKER
SEG. S-824 FIG.11
SEG. S-824 FIG.B.
FOR NOTES SEE SHEET 2.
REVISIONS
SHEET 3 OF 3
S-826
THE PENNSYLVANIA RAILROAD
TYPICAL
CIRCUITS FOR REMOTE CONTROL OF OUT-LYING SWITCH
OFFICE OF CHIEF SIGNAL ENGINEER, PHILA., PA., APRIL 1, 1930.
NOT TO SCALE
Approved
Chief Signal Engineer
Approved
Chief Engineer

J. P. Hoffman

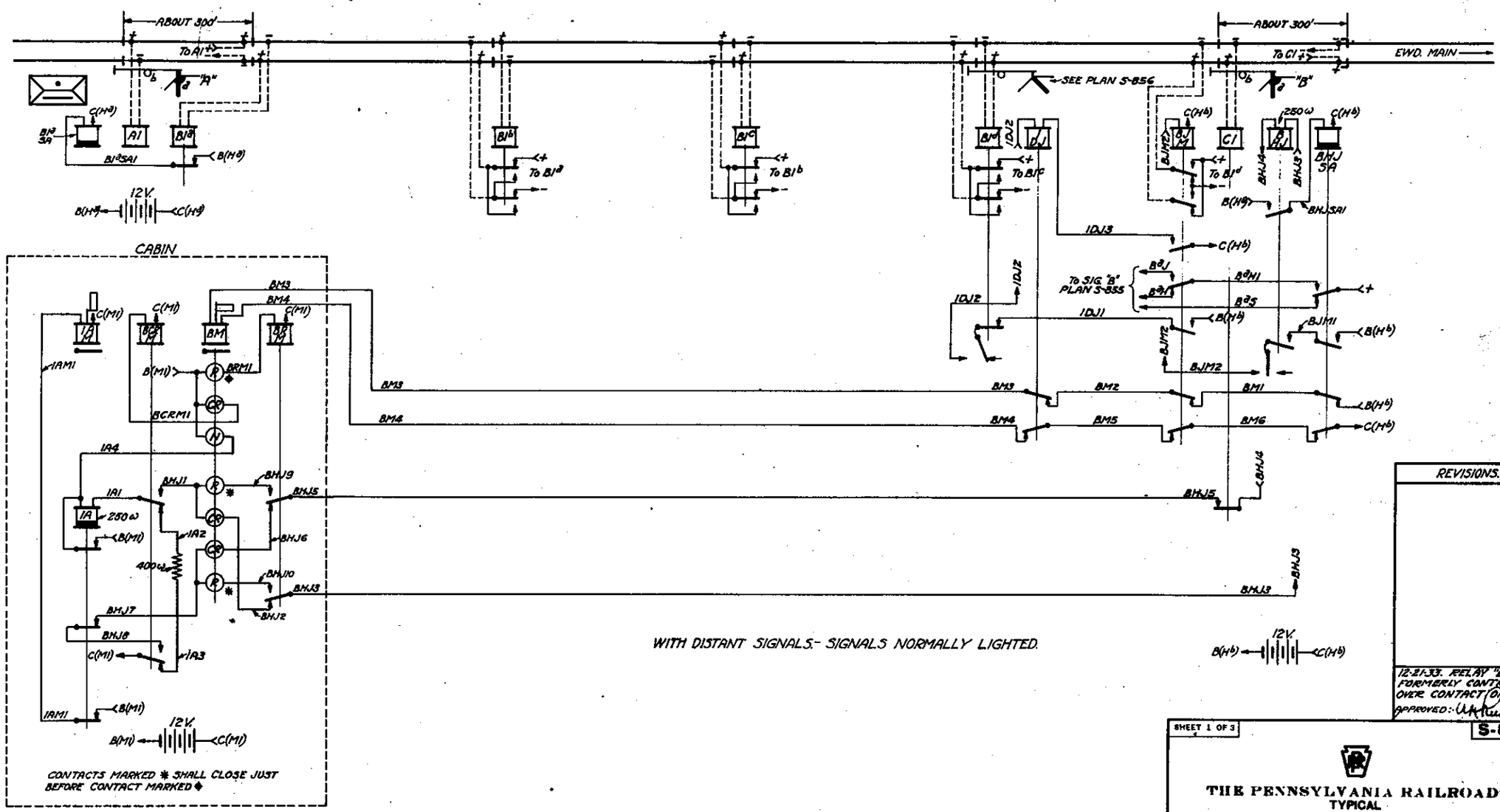

CONTACTS MARKED ✱ SHALL CLOSE JUST BEFORE CONTACT MARKED ◆

NOTE:-

CIRCUIT FOR CLEAR CONTROL RELAY FOR SIG. "A" SHALL BREAK OVER FRONT CONTACT OF RELAY "B13SA."

CIRCUIT CONTROLLER "BM" SHALL BE EQUIPPED WITH A DEVICE TO STOP THE LEVER AT MID-STROKE, IN GOING FROM NORMAL TO REVERSE, IN ACCORDANCE WITH PLAN S-854.

REVISIONS.

12-21-33. RELAY "BCRM" FORMERLY CONTROLLED OVER CONTACT OF "1A."

APPROVED: [illegible] Chief Engineer

SHEET 1 OF 3

S-827

THE PENNSYLVANIA RAILROAD

TYPICAL

CONTROL CIRCUITS FOR REMOTE CONTROL OF MANUAL BLOCK SIGNAL

OFFICE OF CHIEF SIGNAL ENGINEER, PHILA., PA., MARCH 6, 1933.

NOT TO SCALE

Approved [illegible] Chief Signal Engineer

Approved [illegible] Chief [illegible]

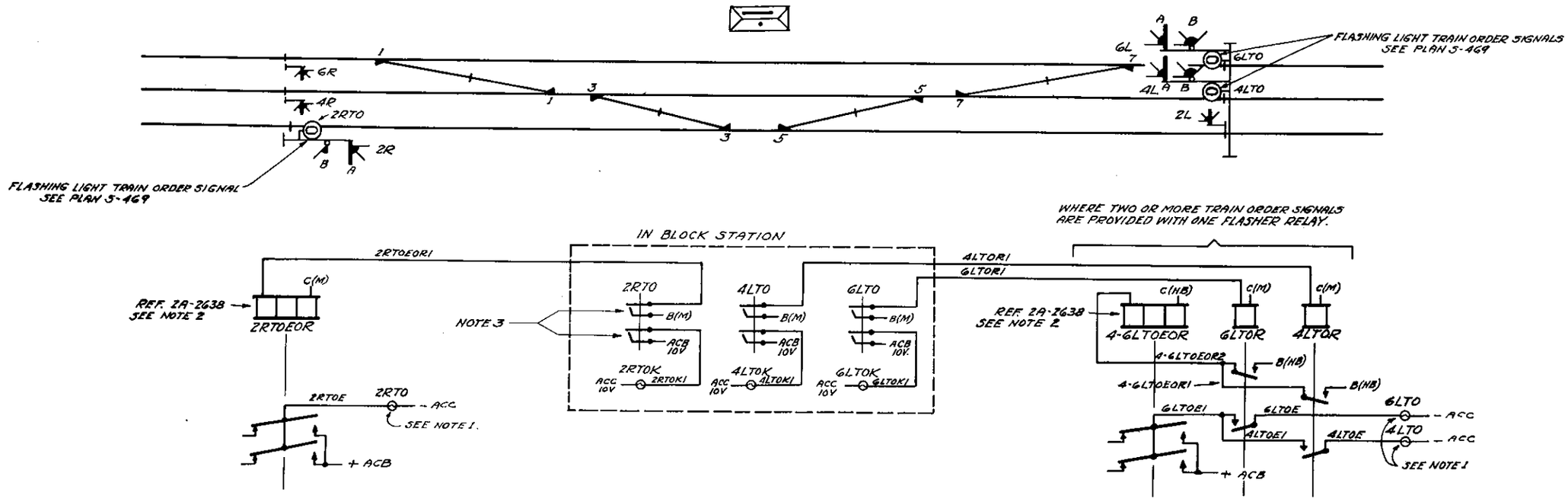

NOTE:

1. 10 VOLT, 40 WATT LAMPS SHALL BE USED IN FLASHING LIGHT TRAIN ORDER SIGNALS. VOLTAGE AT LAMPS SHALL BE BETWEEN 9.0 AND 9.5 VOLTS.
2. FLASHER RELAYS SHALL BE ADJUSTED TO APPROXIMATELY 30 FLASHES PER MINUTE.
3. CONTROL SWITCHES SHALL BE TWO POSITION, DOUBLE POLE, SIMILAR TO W.R.S.CO. PLATE M30, REF. 2, PCE. NO. 0300-102.

REVISIONS

SUPERSEDES PLAN S-830
DATED 4-14-43

1 SHEET

S-830

THE PENNSYLVANIA RAILROAD

TYPICAL

CONTROL CIRCUITS FOR FLASHING LIGHT TRAIN ORDER SIGNAL

OFFICE OF CHIEF ENGINEER,
PHILA., PA., APRIL 25, 1950.

NOT TO SCALE

APPROVED: H. G. Salmonson
ASST. CHIEF ENGINEER-SIGNALS

APPROVED: J. H. Merritt
CHIEF ENGINEER

N.Q.M.

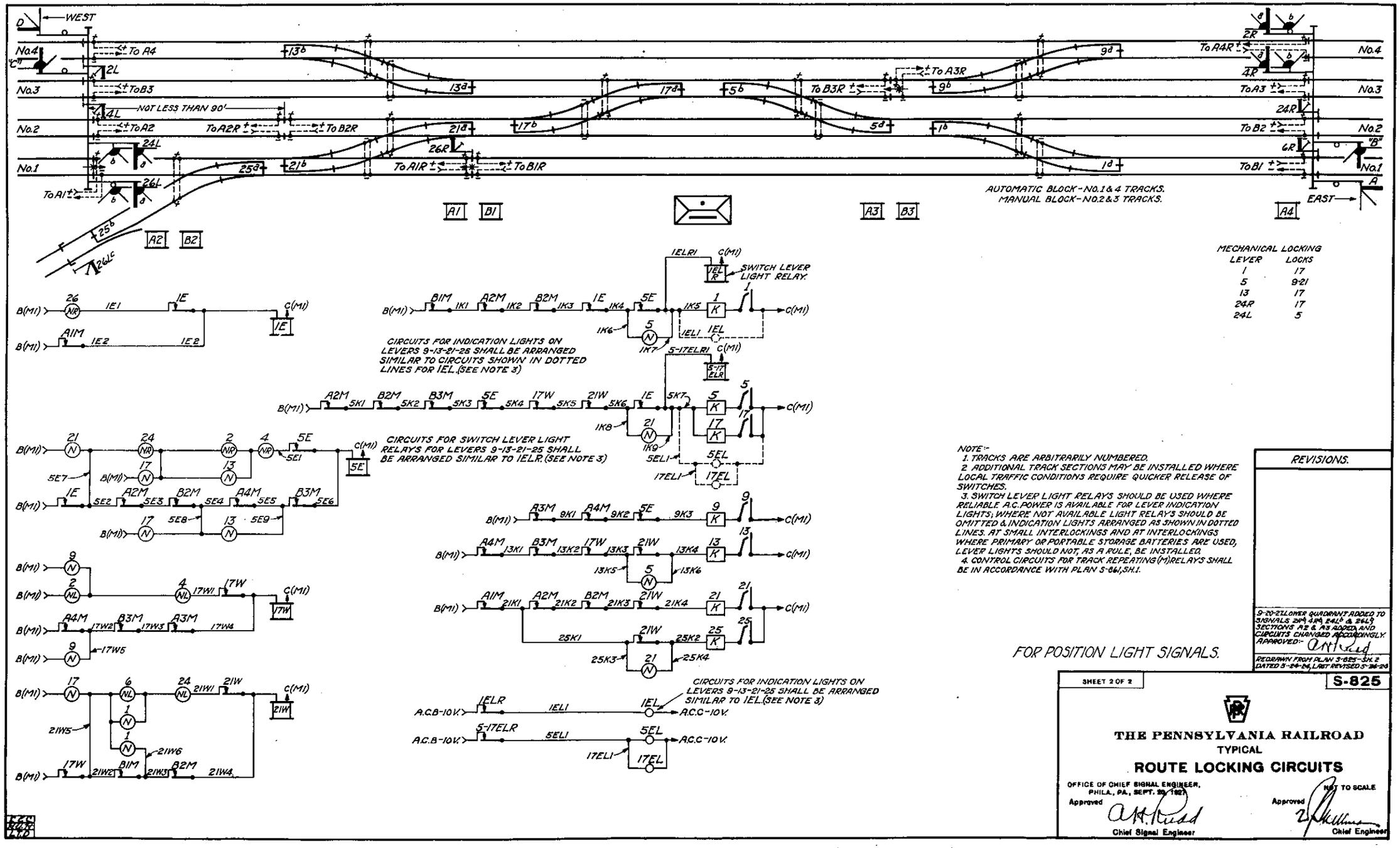

MECHANICAL LOCKING

LEVER	LOCKS
1	17
5	9-21
13	17
24R	17
24L	5

NOTE:-
1. TRACKS ARE ARBITRARILY NUMBERED.
2. ADDITIONAL TRACK SECTIONS MAY BE INSTALLED WHERE LOCAL TRAFFIC CONDITIONS REQUIRE QUICKER RELEASE OF SWITCHES.
3. SWITCH LEVER LIGHT RELAYS SHOULD BE USED WHERE RELIABLE A.C. POWER IS AVAILABLE FOR LEVER INDICATION LIGHTS; WHERE NOT AVAILABLE LIGHT RELAYS SHOULD BE OMITTED & INDICATION LIGHTS ARRANGED AS SHOWN IN DOTTED LINES. AT SMALL INTERLOCKINGS AND AT INTERLOCKINGS WHERE PRIMARY OR PORTABLE STORAGE BATTERIES ARE USED, LEVER LIGHTS SHOULD NOT, AS A RULE, BE INSTALLED.
4. CONTROL CIRCUITS FOR TRACK REPEATING (M) RELAYS SHALL BE IN ACCORDANCE WITH PLAN S-661, SH.1.

FOR POSITION LIGHT SIGNALS.

REVISIONS.

9-20-27 LOWER QUADRANT ADDED TO SIGNALS 2M, 4M, 24L & 26L; SECTIONS A2 & A3 ADDED AND CIRCUITS CHANGED ACCORDINGLY.
APPROVED:- A.H. Rudd

REDRAWN FROM PLAN S-825-SH. 2 DATED 5-24-24, LAST REVISED 5-26-24

SHEET 2 OF 2

S-825

THE PENNSYLVANIA RAILROAD
TYPICAL
ROUTE LOCKING CIRCUITS

OFFICE OF CHIEF SIGNAL ENGINEER,
PHILA., PA., SEPT. 20, 1927

NOT TO SCALE

Approved A.H. Rudd
Chief Signal Engineer

Approved
Chief Engineer

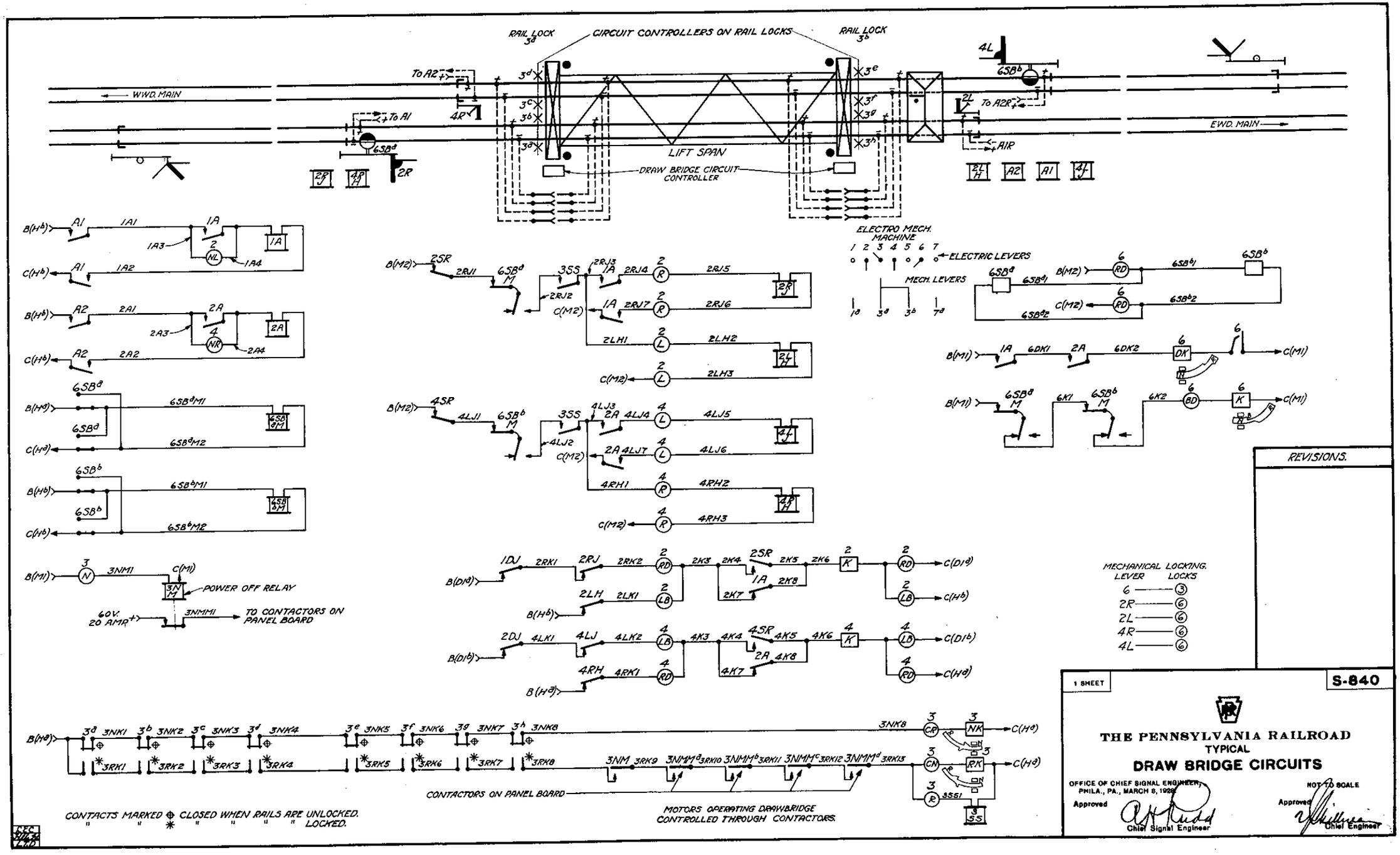
RAIL LOCK 3d
CIRCUIT CONTROLLERS ON RAIL LOCKS
RAIL LOCK 3b
WWD. MAIN
EWD. MAIN
To A2
To A1
To A2R
4R
4L
2L
6SBd
6SBb
2R
AIR
LIFT SPAN
DRAW BRIDGE CIRCUIT CONTROLLER
ELECTRO MECH. MACHINE
ELECTRIC LEVERS
MECH. LEVERS
POWER OFF RELAY
60V. 20 AMP
TO CONTACTORS ON PANEL BOARD
CONTACTS MARKED ⊕ CLOSED WHEN RAILS ARE UNLOCKED.
" " ✱ " " " " LOCKED.
CONTACTORS ON PANEL BOARD
MOTORS OPERATING DRAWBRIDGE CONTROLLED THROUGH CONTACTORS.
MECHANICAL LOCKING.
LEVER LOCKS
6 — 3
2R — 6
2L — 6
4R — 6
4L — 6
REVISIONS.
1 SHEET
S-840
THE PENNSYLVANIA RAILROAD
TYPICAL
DRAW BRIDGE CIRCUITS
OFFICE OF CHIEF SIGNAL ENGINEER,
PHILA., PA., MARCH 8, 1928
NOT TO SCALE
Approved
Chief Signal Engineer
Approved
Chief Engineer

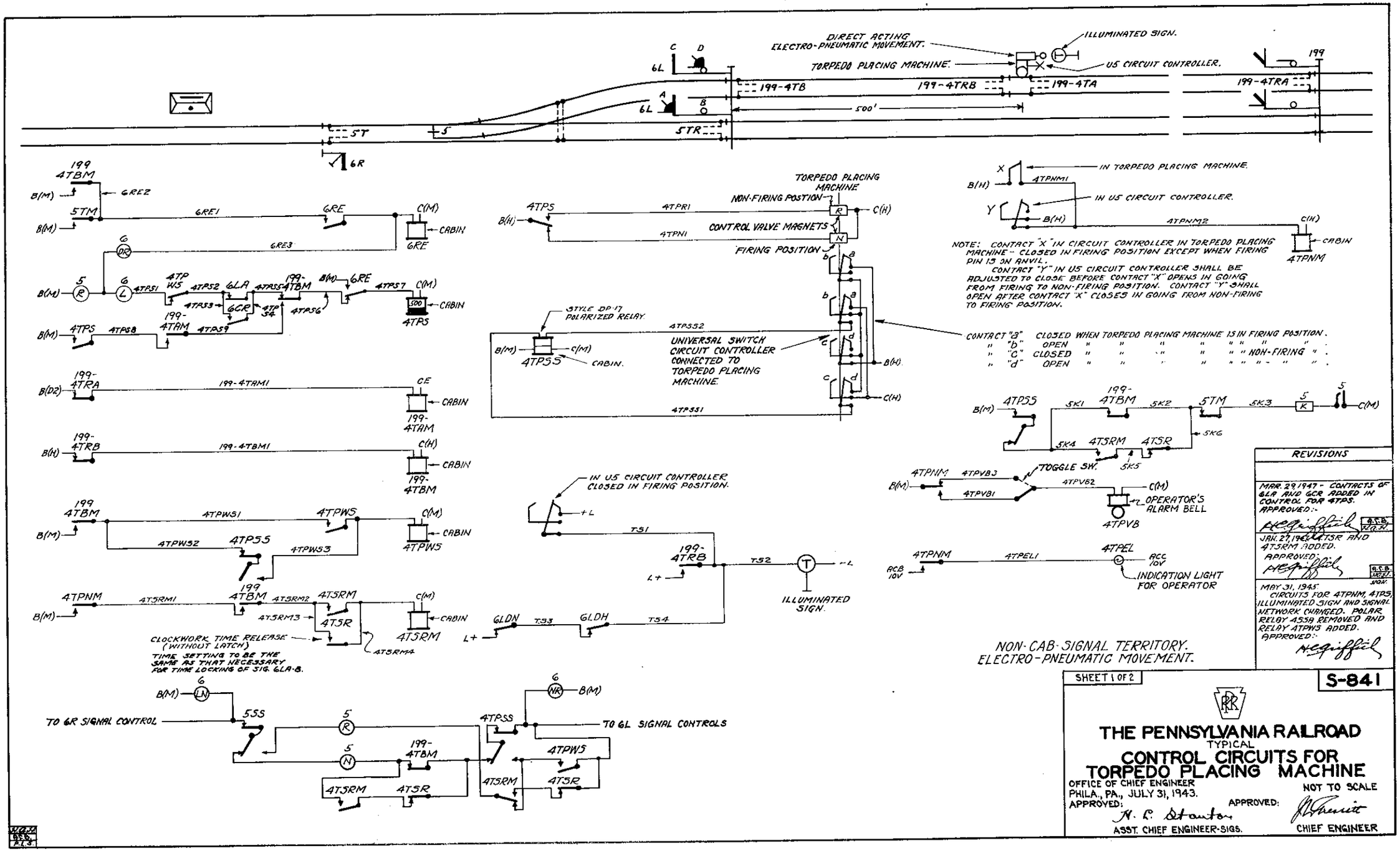

REVISIONS
MAR. 29, 1947 - CONTACTS OF 6LA AND 6CR ADDED IN CONTROL FOR 4TPS. APPROVED:-
JAN. 27, 1948 - 4TSR AND 4TSRM ADDED. APPROVED:
MAY 31, 1945 CIRCUITS FOR 4TPNM, 4TPS, ILLUMINATED SIGN AND SIGNAL NETWORK CHANGED. POLAR RELAY 4S59 REMOVED AND RELAY 4TPWS ADDED. APPROVED:-

SHEET 1 OF 2

S-841

THE PENNSYLVANIA RAILROAD

TYPICAL

CONTROL CIRCUITS FOR TORPEDO PLACING MACHINE

OFFICE OF CHIEF ENGINEER
PHILA., PA., JULY 31, 1943.

NOT TO SCALE

APPROVED: N. C. Stanton
ASST. CHIEF ENGINEER-SIGS.

APPROVED: J. T. Emmett
CHIEF ENGINEER

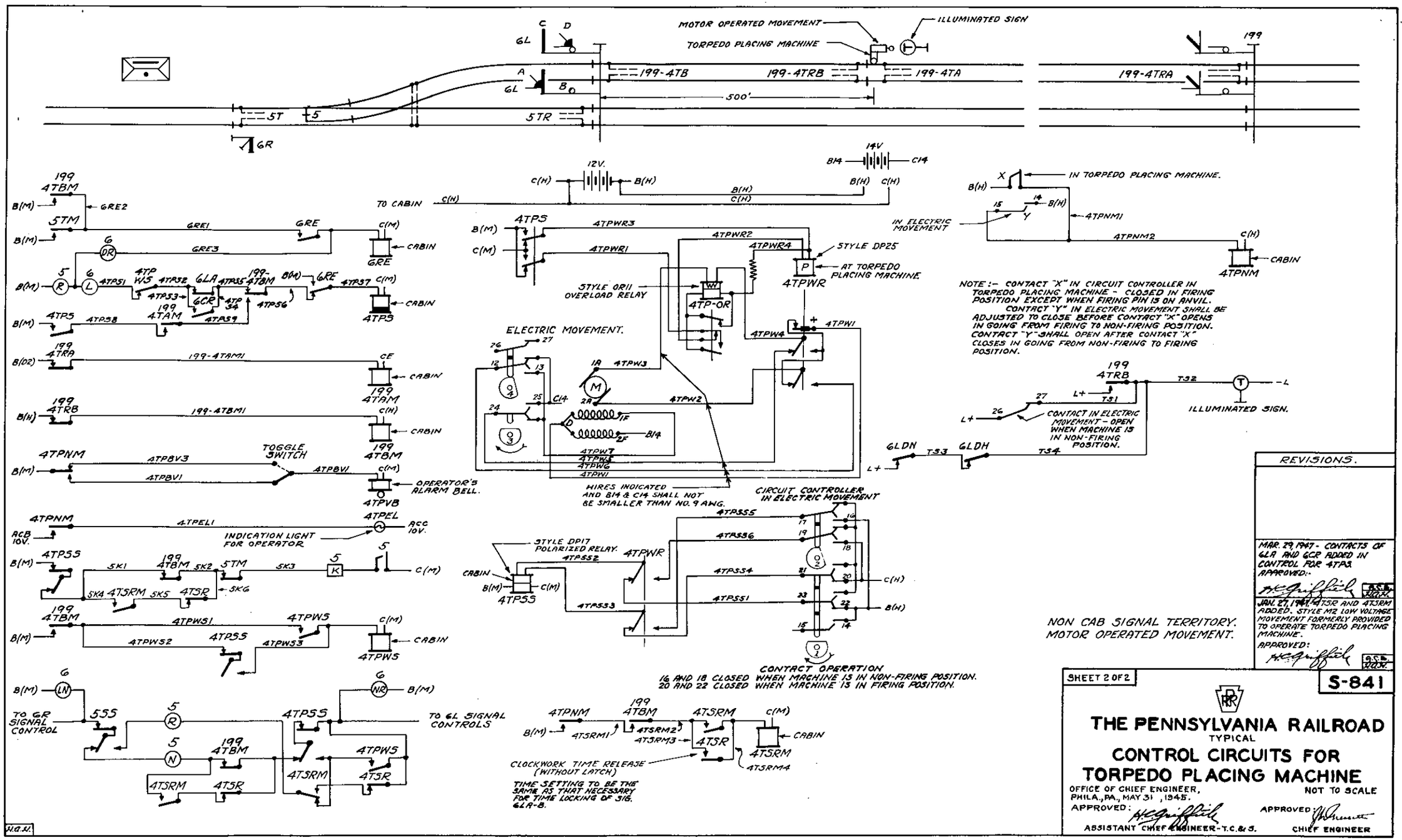
MOTOR OPERATED MOVEMENT
ILLUMINATED SIGN
TORPEDO PLACING MACHINE
199-4TB
199-4TRB
199-4TA
199-4TRA
500'
5T
5TR
6L
6R
12V.
14V
TO CABIN
IN TORPEDO PLACING MACHINE.
IN ELECTRIC MOVEMENT
STYLE DP25
AT TORPEDO PLACING MACHINE
STYLE OR11 OVERLOAD RELAY
ELECTRIC MOVEMENT.
NOTE :- CONTACT "X" IN CIRCUIT CONTROLLER IN TORPEDO PLACING MACHINE - CLOSED IN FIRING POSITION EXCEPT WHEN FIRING PIN IS ON ANVIL. CONTACT "Y" IN ELECTRIC MOVEMENT SHALL BE ADJUSTED TO CLOSE BEFORE CONTACT "X" OPENS IN GOING FROM FIRING TO NON-FIRING POSITION. CONTACT "Y" SHALL OPEN AFTER CONTACT "X" CLOSES IN GOING FROM NON-FIRING TO FIRING POSITION.
CONTACT IN ELECTRIC MOVEMENT - OPEN WHEN MACHINE IS IN NON-FIRING POSITION.
ILLUMINATED SIGN.
TOGGLE SWITCH
OPERATOR'S ALARM BELL.
INDICATION LIGHT FOR OPERATOR
HIRES INDICATED AND B14 & C14 SHALL NOT BE SMALLER THAN NO. 9 AWG.
CIRCUIT CONTROLLER IN ELECTRIC MOVEMENT
STYLE DP17 POLARIZED RELAY.
CONTACT OPERATION
16 AND 18 CLOSED WHEN MACHINE IS IN NON-FIRING POSITION.
20 AND 22 CLOSED WHEN MACHINE IS IN FIRING POSITION.
TO GR SIGNAL CONTROL
TO 6L SIGNAL CONTROLS
CLOCKWORK TIME RELEASE (WITHOUT LATCH)
TIME SETTING TO BE THE SAME AS THAT NECESSARY FOR TIME LOCKING OF SIG. 6LA-B.
NON CAB SIGNAL TERRITORY. MOTOR OPERATED MOVEMENT.
REVISIONS.
MAR. 29, 1947 - CONTACTS OF 6LA AND 6CR ADDED IN CONTROL FOR 4TPS. APPROVED:-
JAN. 27, 1947 - 4TSR AND 4TSRM ADDED. STYLE M2 LOW VOLTAGE MOVEMENT FORMERLY PROVIDED TO OPERATE TORPEDO PLACING MACHINE. APPROVED:
SHEET 2 OF 2
S-841
THE PENNSYLVANIA RAILROAD
TYPICAL
CONTROL CIRCUITS FOR TORPEDO PLACING MACHINE
OFFICE OF CHIEF ENGINEER, PHILA., PA., MAY 31, 1945.
NOT TO SCALE
APPROVED:
ASSISTANT CHIEF ENGINEER-T.C.&S.
APPROVED:
CHIEF ENGINEER

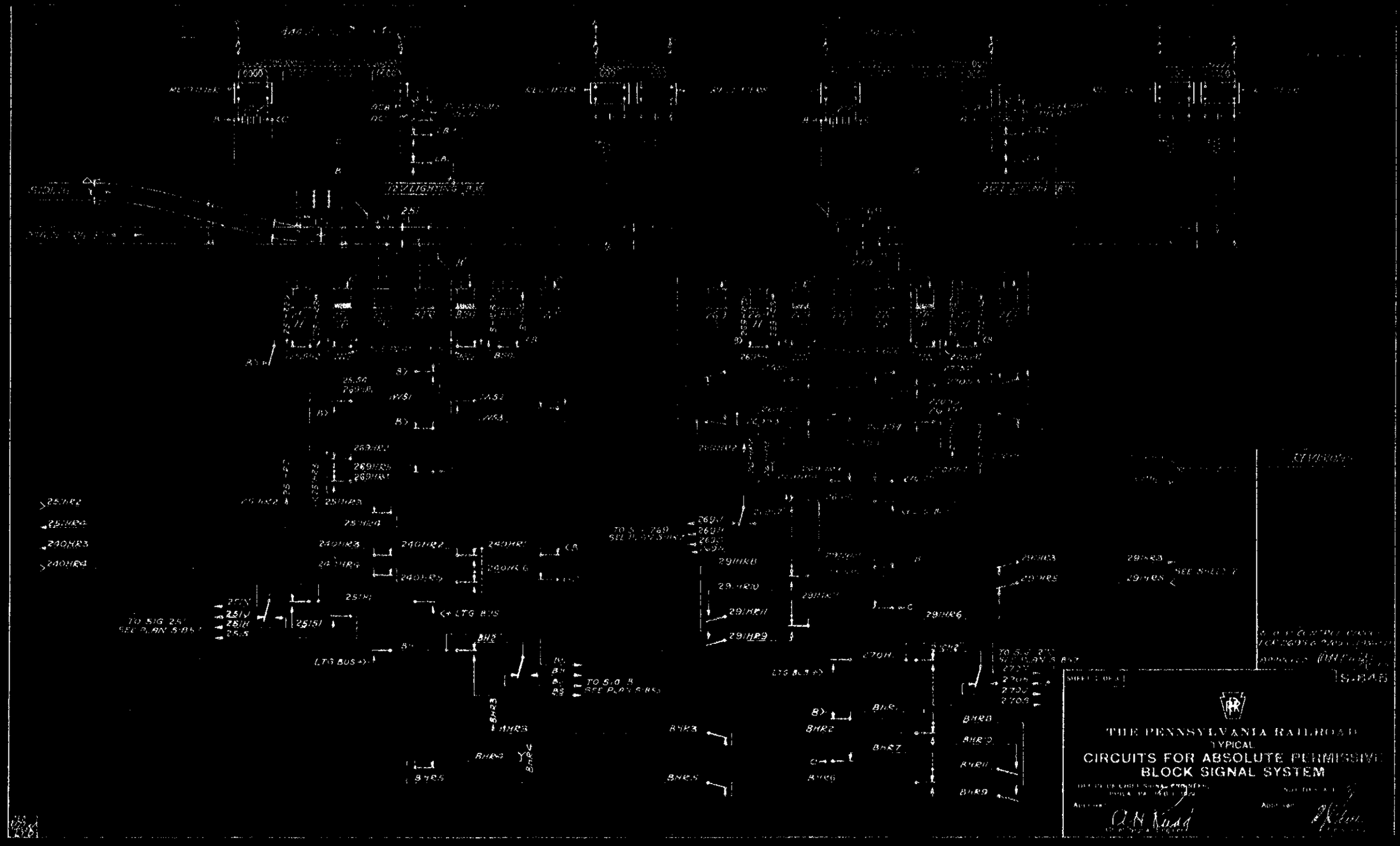
THE PENNSYLVANIA RAILROAD
TYPICAL
CIRCUITS FOR ABSOLUTE PERMISSIVE
BLOCK SIGNAL SYSTEM

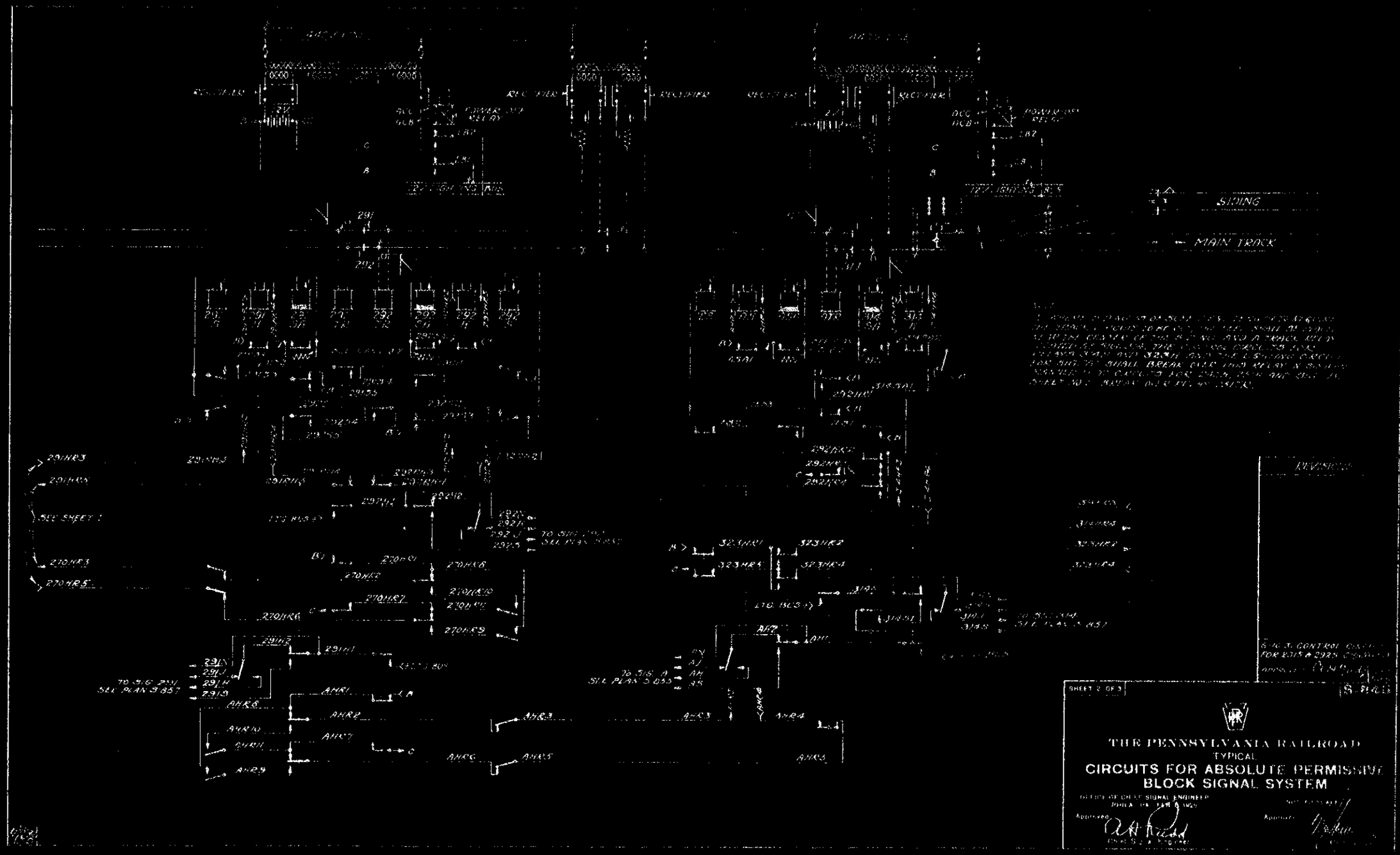
SIDING
MAIN TRACK
REVISIONS
SHEET 2 OF 3
THE PENNSYLVANIA RAILROAD
TYPICAL
CIRCUITS FOR ABSOLUTE PERMISSIVE
BLOCK SIGNAL SYSTEM

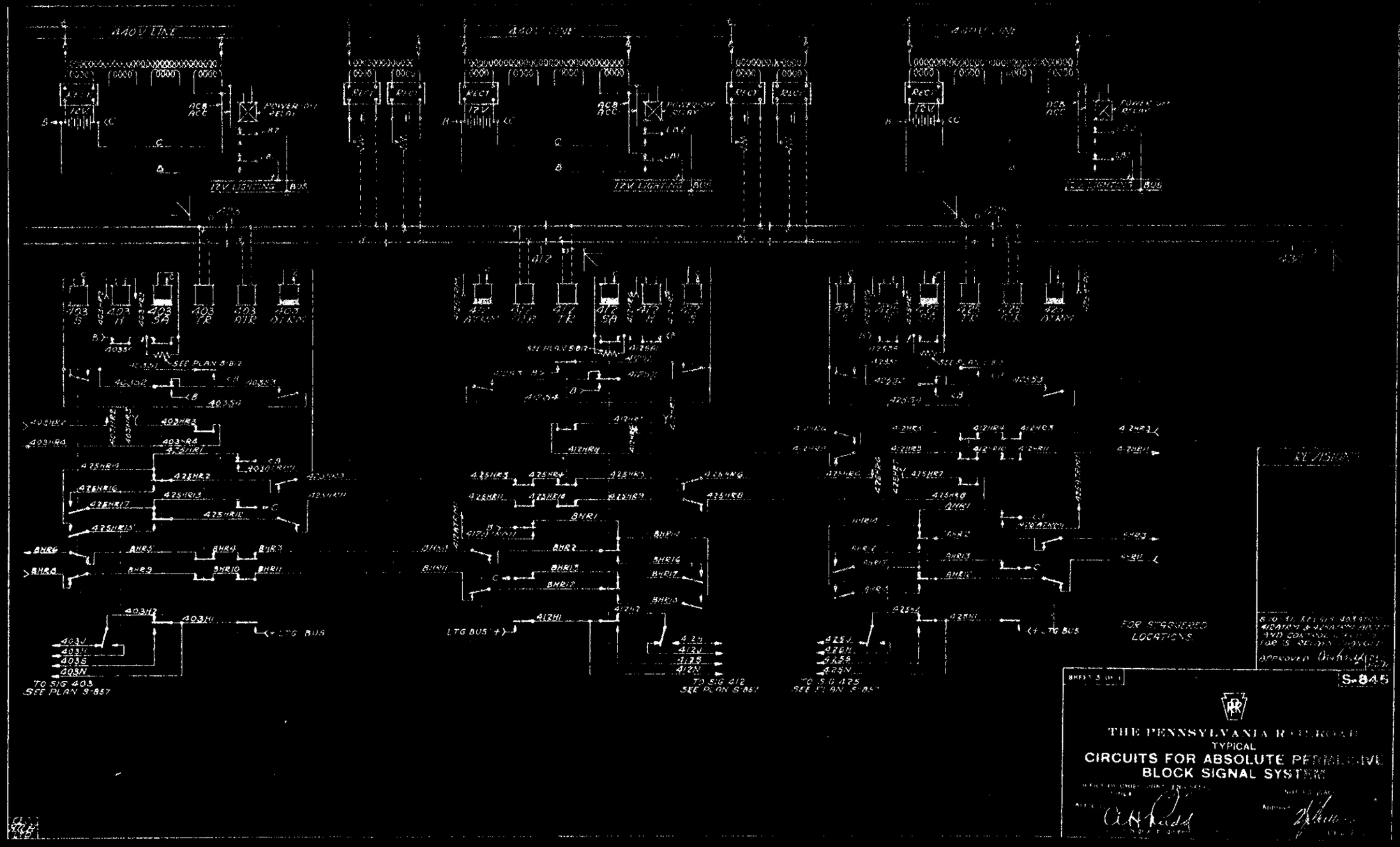
440V LINE
12V LIGHTING BUS
POWER OFF RELAY
TO SIG 403
SEE PLAN S-857
TO SIG 412
SEE PLAN S-857
TO SIG 425
SEE PLAN S-857
LTG BUS (+)
FOR STAGGERED LOCATIONS
REVISIONS
S-845
THE PENNSYLVANIA RAILROAD
TYPICAL
CIRCUITS FOR ABSOLUTE PERMISSIVE BLOCK SIGNAL SYSTEM

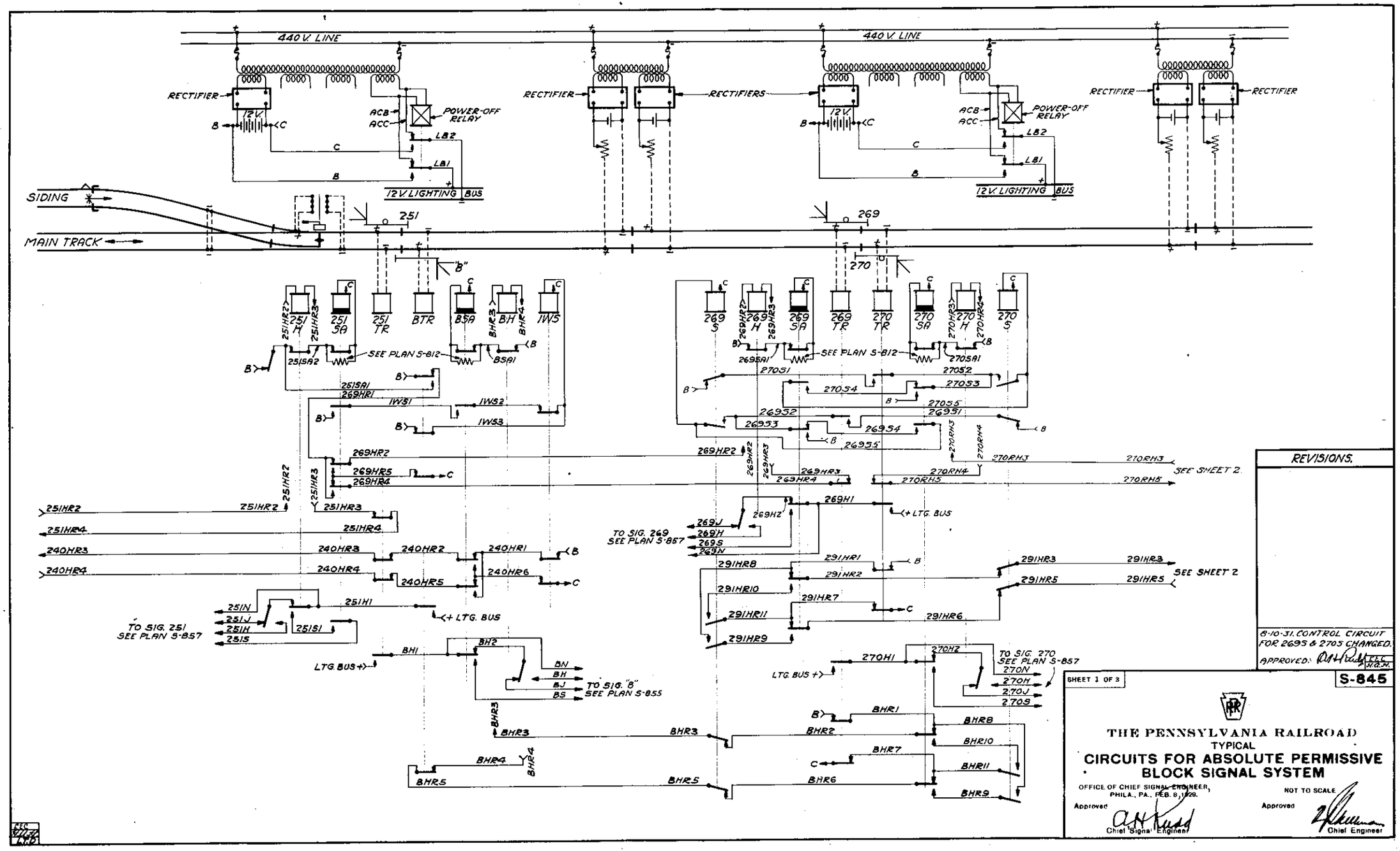
440 V. LINE
440 V. LINE
RECTIFIER
RECTIFIERS
RECTIFIER
RECTIFIER
RECTIFIER
12 V.
ACB
ACC
POWER-OFF RELAY
LB2
LB1
12 V. LIGHTING BUS
SIDING
MAIN TRACK
251
269
270
"B"
251 H
251 SA
251 TR
BTR
BSA
BH
IWS
269 S
269 H
269 SA
269 TR
270 TR
270 SA
270 H
270 S
SEE PLAN S-812
TO SIG. 269 SEE PLAN S-857
TO SIG. 251 SEE PLAN S-857
TO SIG. "B" SEE PLAN S-855
TO SIG. 270 SEE PLAN S-857
+ LTG. BUS
LTG. BUS +
SEE SHEET 2
REVISIONS.
8-10-31. CONTROL CIRCUIT FOR 269S & 270S CHANGED.
APPROVED:
SHEET 1 OF 3
S-845
THE PENNSYLVANIA RAILROAD
TYPICAL
CIRCUITS FOR ABSOLUTE PERMISSIVE BLOCK SIGNAL SYSTEM
OFFICE OF CHIEF SIGNAL ENGINEER, PHILA., PA., FEB. 8, 1929.
NOT TO SCALE
Approved
Chief Signal Engineer
Approved
Chief Engineer

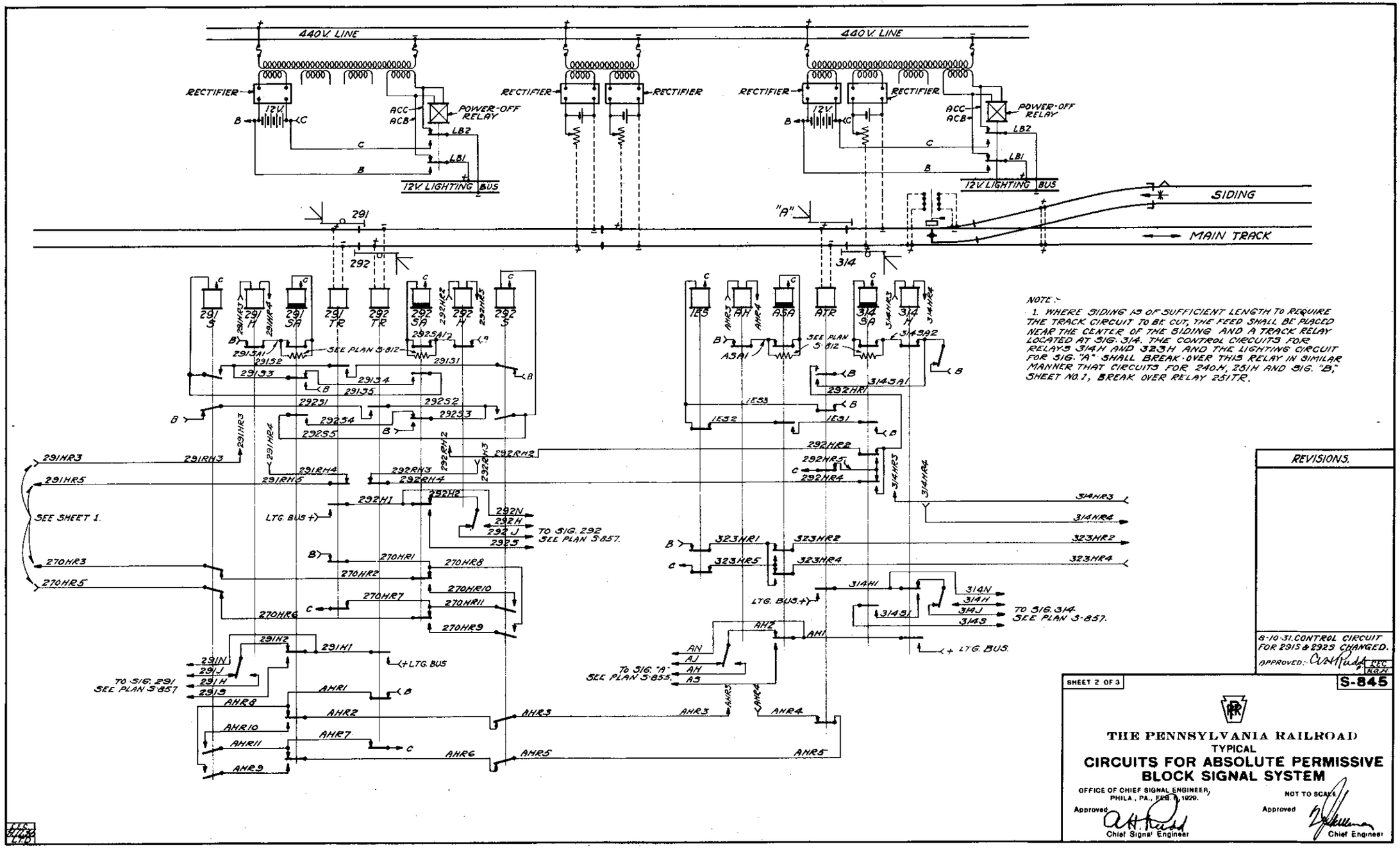
440V. LINE
440V. LINE
RECTIFIER
RECTIFIER
RECTIFIER
RECTIFIER
RECTIFIER
12V.
ACC
ACB
POWER-OFF RELAY
LB2
LB1
12V. LIGHTING BUS
12V. LIGHTING BUS
SIDING
MAIN TRACK
291
292
"A"
314
SEE PLAN 5-812
TO SIG. 292 SEE PLAN 5-857.
SEE SHEET 1.
LTG. BUS +
TO SIG. 291 SEE PLAN 5-857
TO SIG. "A" SEE PLAN 5-855.
TO SIG. 314 SEE PLAN 5-857.
+ LTG. BUS
NOTE:-
1. WHERE SIDING IS OF SUFFICIENT LENGTH TO REQUIRE THE TRACK CIRCUIT TO BE CUT, THE FEED SHALL BE PLACED NEAR THE CENTER OF THE SIDING AND A TRACK RELAY LOCATED AT SIG. 314. THE CONTROL CIRCUITS FOR RELAYS 314H AND 323H AND THE LIGHTING CIRCUIT FOR SIG. "A" SHALL BREAK-OVER THIS RELAY IN SIMILAR MANNER THAT CIRCUITS FOR 240H, 251H AND SIG. "B", SHEET NO. 1, BREAK OVER RELAY 251TR.
REVISIONS.
8-10-31. CONTROL CIRCUIT FOR 291S & 292S CHANGED.
APPROVED:- A.H. Rudd
SHEET 2 OF 3
S-845
THE PENNSYLVANIA RAILROAD
TYPICAL
CIRCUITS FOR ABSOLUTE PERMISSIVE BLOCK SIGNAL SYSTEM
OFFICE OF CHIEF SIGNAL ENGINEER, PHILA., PA., DEC. 1, 1929.
NOT TO SCALE
Approved
Chief Signal Engineer
Approved
Chief Engineer

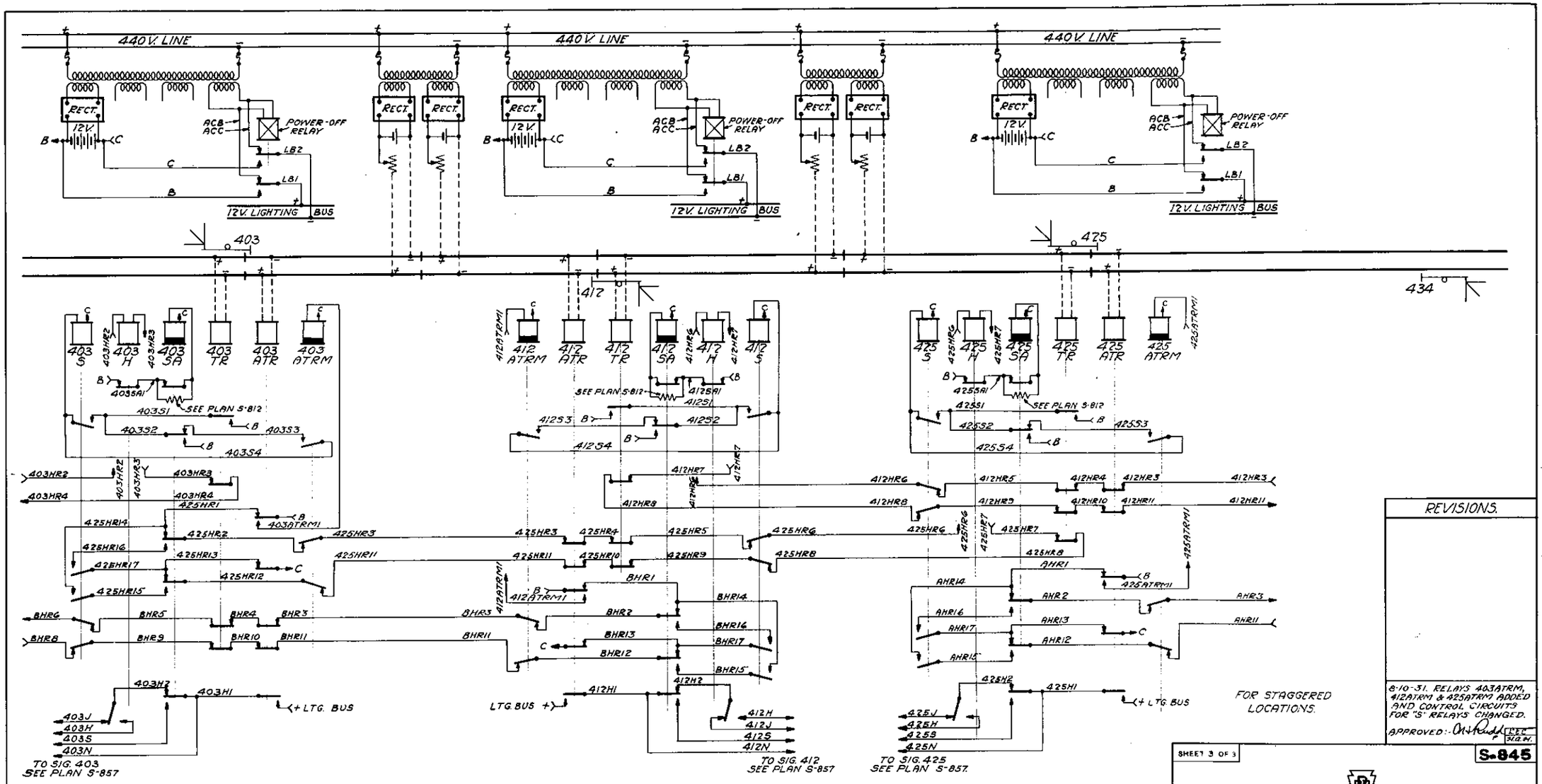

REVISIONS.

6-10-31. RELAYS 403ATRM, 412ATRM & 425ATRM ADDED AND CONTROL CIRCUITS FOR "S" RELAYS CHANGED.

APPROVED: A H Rudd

SHEET 3 OF 3

S-845

THE PENNSYLVANIA RAILROAD

TYPICAL

CIRCUITS FOR ABSOLUTE PERMISSIVE BLOCK SIGNAL SYSTEM

OFFICE OF CHIEF SIGNAL ENGINEER, PHILA., PA., FEB. 8, 1929.

NOT TO SCALE

Approved A H Rudd Chief Signal Engineer

Approved Chief Engineer

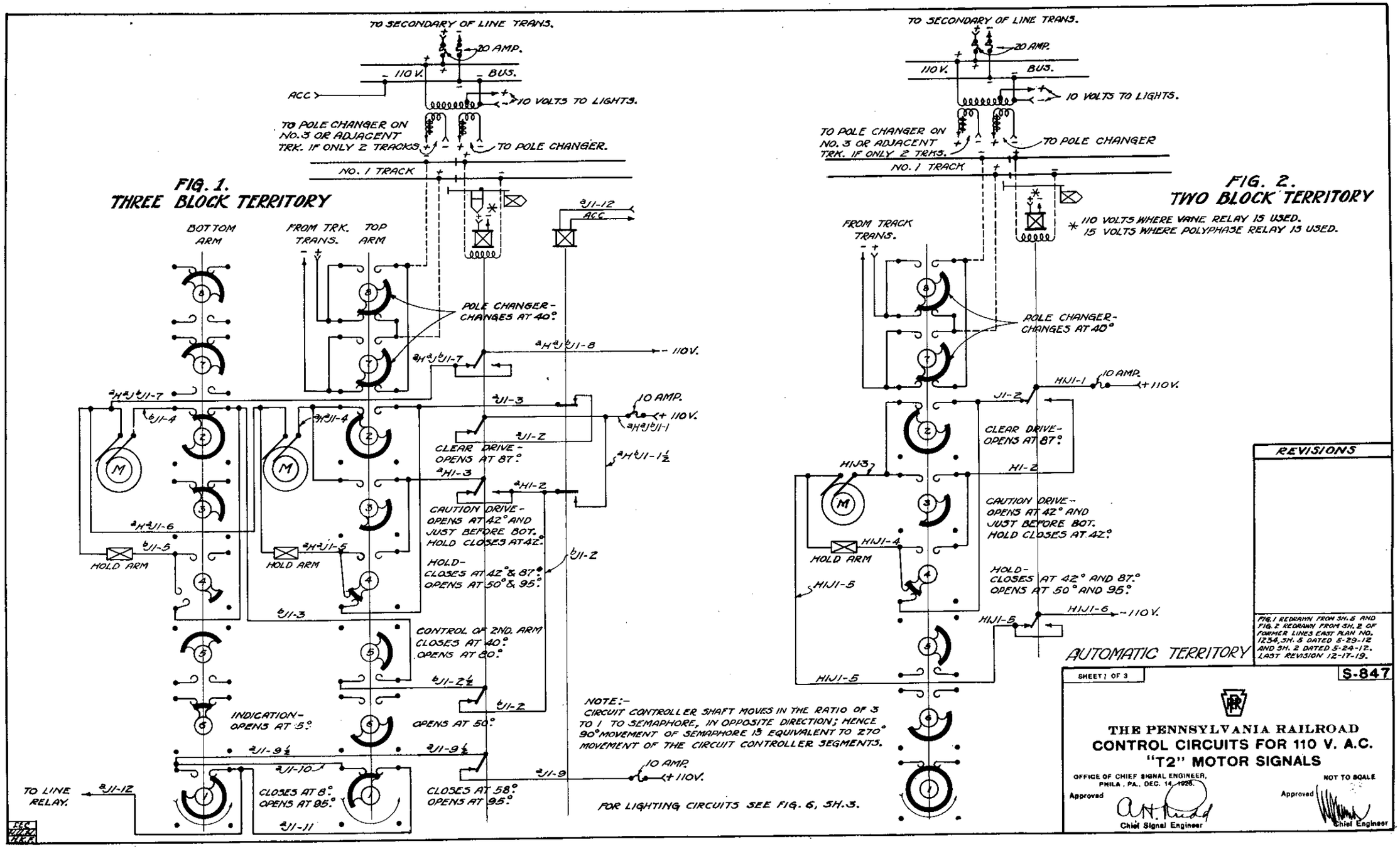
FIG. 1.
THREE BLOCK TERRITORY
TO SECONDARY OF LINE TRANS.
20 AMP.
110 V.
BUS.
ACC.
10 VOLTS TO LIGHTS.
TO POLE CHANGER ON NO. 3 OR ADJACENT TRK. IF ONLY 2 TRACKS
TO POLE CHANGER.
NO. 1 TRACK
BOTTOM ARM
FROM TRK. TRANS.
TOP ARM
POLE CHANGER - CHANGES AT 40°.
110V.
10 AMP.
CLEAR DRIVE - OPENS AT 87°.
CAUTION DRIVE - OPENS AT 42° AND JUST BEFORE BOT. HOLD CLOSES AT 42°.
HOLD - CLOSES AT 42° & 87°. OPENS AT 50° & 95°.
HOLD ARM
CONTROL OF 2ND. ARM CLOSES AT 40°. OPENS AT 80°.
INDICATION - OPENS AT 5°.
OPENS AT 50°.
CLOSES AT 8°. OPENS AT 85°.
CLOSES AT 58°. OPENS AT 95°.
TO LINE RELAY.
NOTE:- CIRCUIT CONTROLLER SHAFT MOVES IN THE RATIO OF 3 TO 1 TO SEMAPHORE, IN OPPOSITE DIRECTION; HENCE 90° MOVEMENT OF SEMAPHORE IS EQUIVALENT TO 270° MOVEMENT OF THE CIRCUIT CONTROLLER SEGMENTS.
FOR LIGHTING CIRCUITS SEE FIG. 6, SH. 3.
FIG. 2.
TWO BLOCK TERRITORY
* 110 VOLTS WHERE VANE RELAY IS USED.
15 VOLTS WHERE POLYPHASE RELAY IS USED.
FROM TRACK TRANS.
POLE CHANGER - CHANGES AT 40°
CLEAR DRIVE - OPENS AT 87°.
CAUTION DRIVE - OPENS AT 42° AND JUST BEFORE BOT. HOLD CLOSES AT 42°.
HOLD - CLOSES AT 42° AND 87°. OPENS AT 50° AND 95°.
AUTOMATIC TERRITORY
REVISIONS
FIG. 1 REDRAWN FROM SH. 5 AND FIG. 2 REDRAWN FROM SH. 2 OF FORMER LINES EAST PLAN NO. 1234, SH. 5 DATED 5-29-12 AND SH. 2 DATED 5-24-12. LAST REVISION 12-17-19.
SHEET 1 OF 3
S-847
THE PENNSYLVANIA RAILROAD
CONTROL CIRCUITS FOR 110 V. A.C.
"T2" MOTOR SIGNALS
OFFICE OF CHIEF SIGNAL ENGINEER, PHILA., PA., DEC. 14, 1926.
NOT TO SCALE
Approved
Chief Signal Engineer
Approved
Chief Engineer

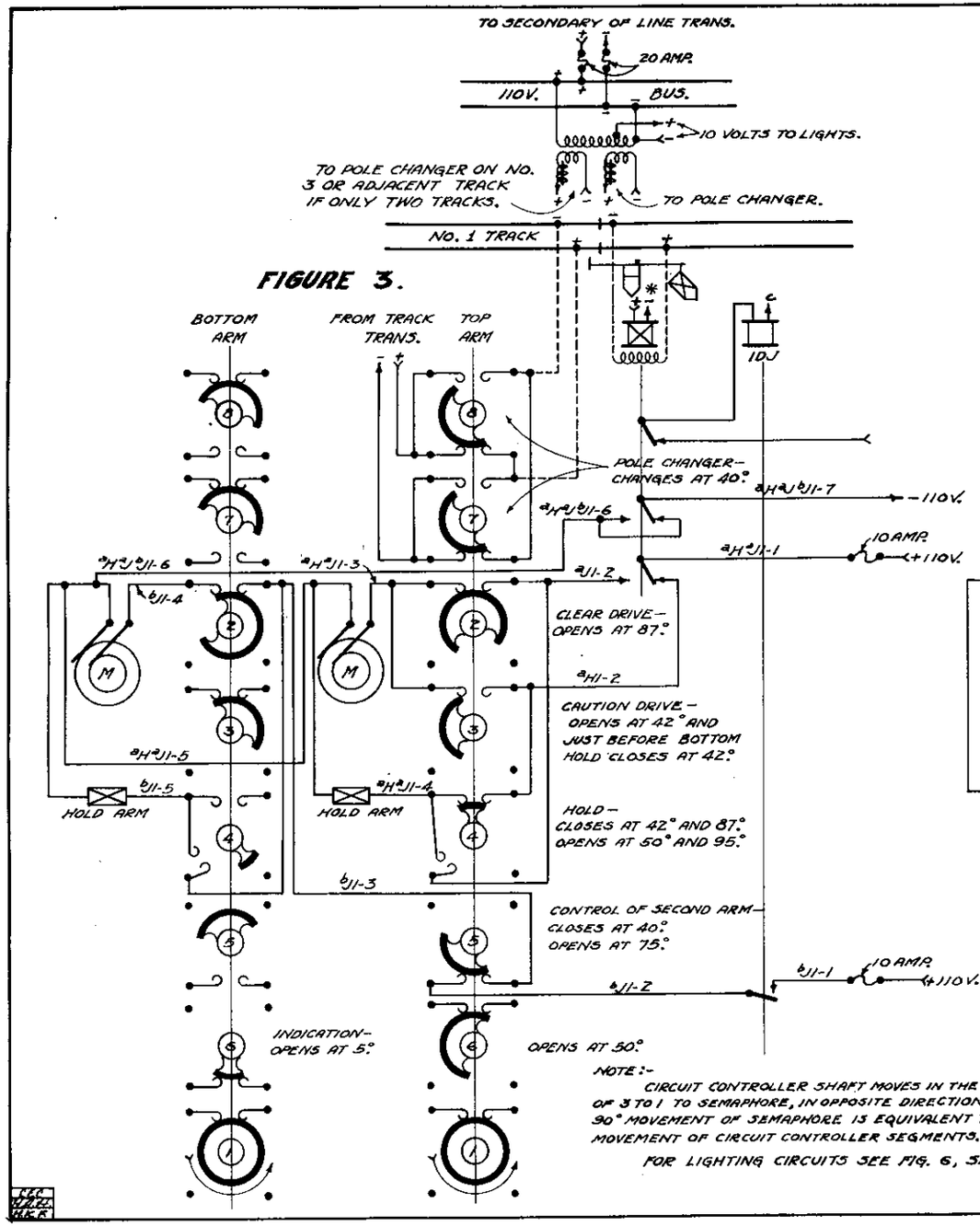

FIGURE 3.

NOTE:- CIRCUIT CONTROLLER SHAFT MOVES IN THE RATIO OF 3 TO 1 TO SEMAPHORE, IN OPPOSITE DIRECTION; HENCE 90° MOVEMENT OF SEMAPHORE IS EQUIVALENT TO 270° MOVEMENT OF CIRCUIT CONTROLLER SEGMENTS.

FOR LIGHTING CIRCUITS SEE FIG. 6, SH. 3.

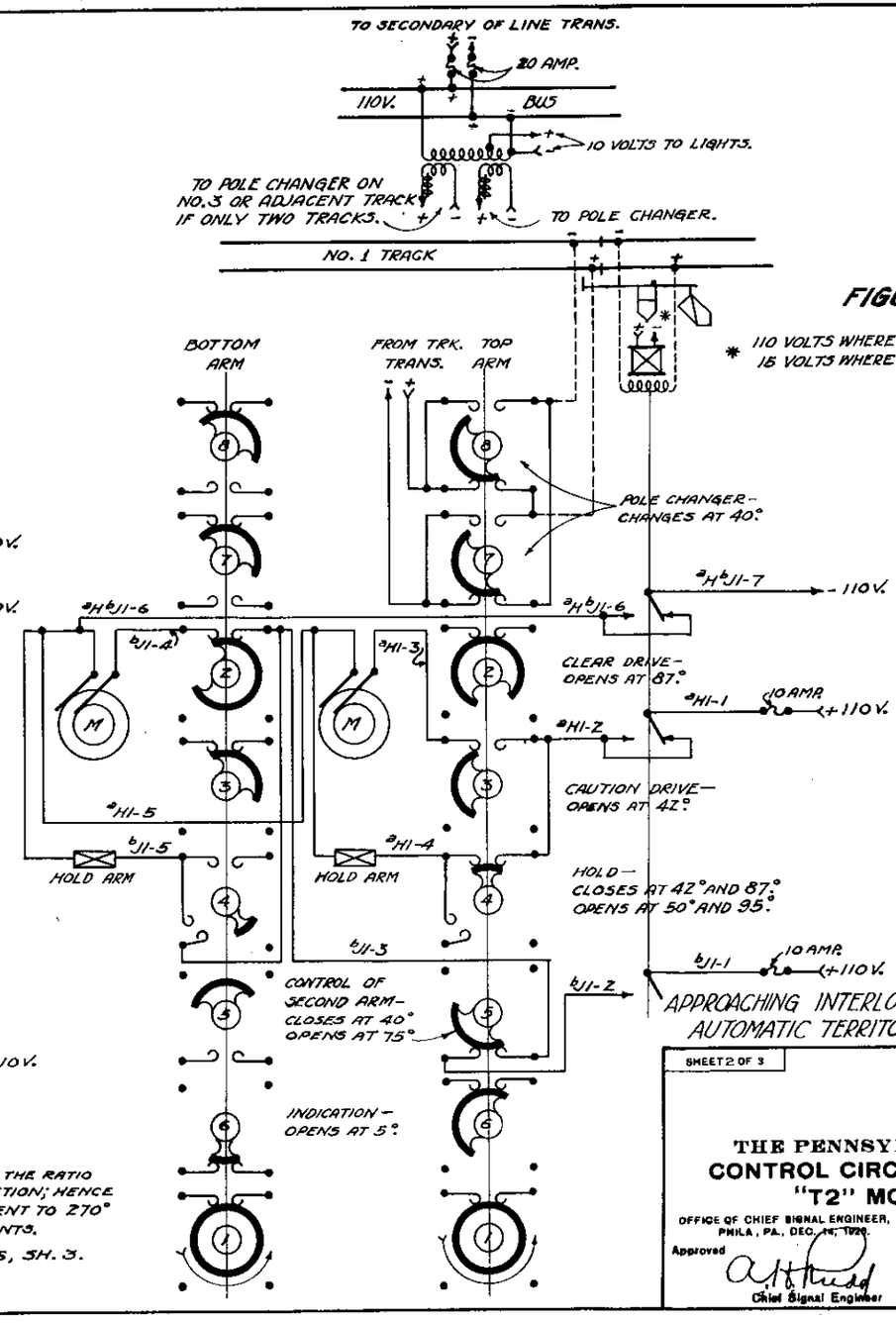

FIGURE 4.

* 110 VOLTS WHERE VANE RELAY IS USED. 16 VOLTS WHERE POLYPHASE IS USED.

APPROACHING INTERLOCKING AUTOMATIC TERRITORY

REVISIONS

FIG. 3 REDRAWN FROM SH. 3 AND FIG. 4 REDRAWN FROM SH. 4 OF FORMER LINES EAST PLAN NO. 1234 - DATED 5-25-1912. LAST REVISION 12-17-1919.

SHEET 2 OF 3

S-847

THE PENNSYLVANIA RAILROAD

CONTROL CIRCUITS FOR 110 V. A.C. "T2" MOTOR SIGNALS

OFFICE OF CHIEF SIGNAL ENGINEER, PHILA., PA., DEC. 14, 1920.

NOT TO SCALE

Approved A. H. Rudd Chief Signal Engineer

Approved Chief Engineer

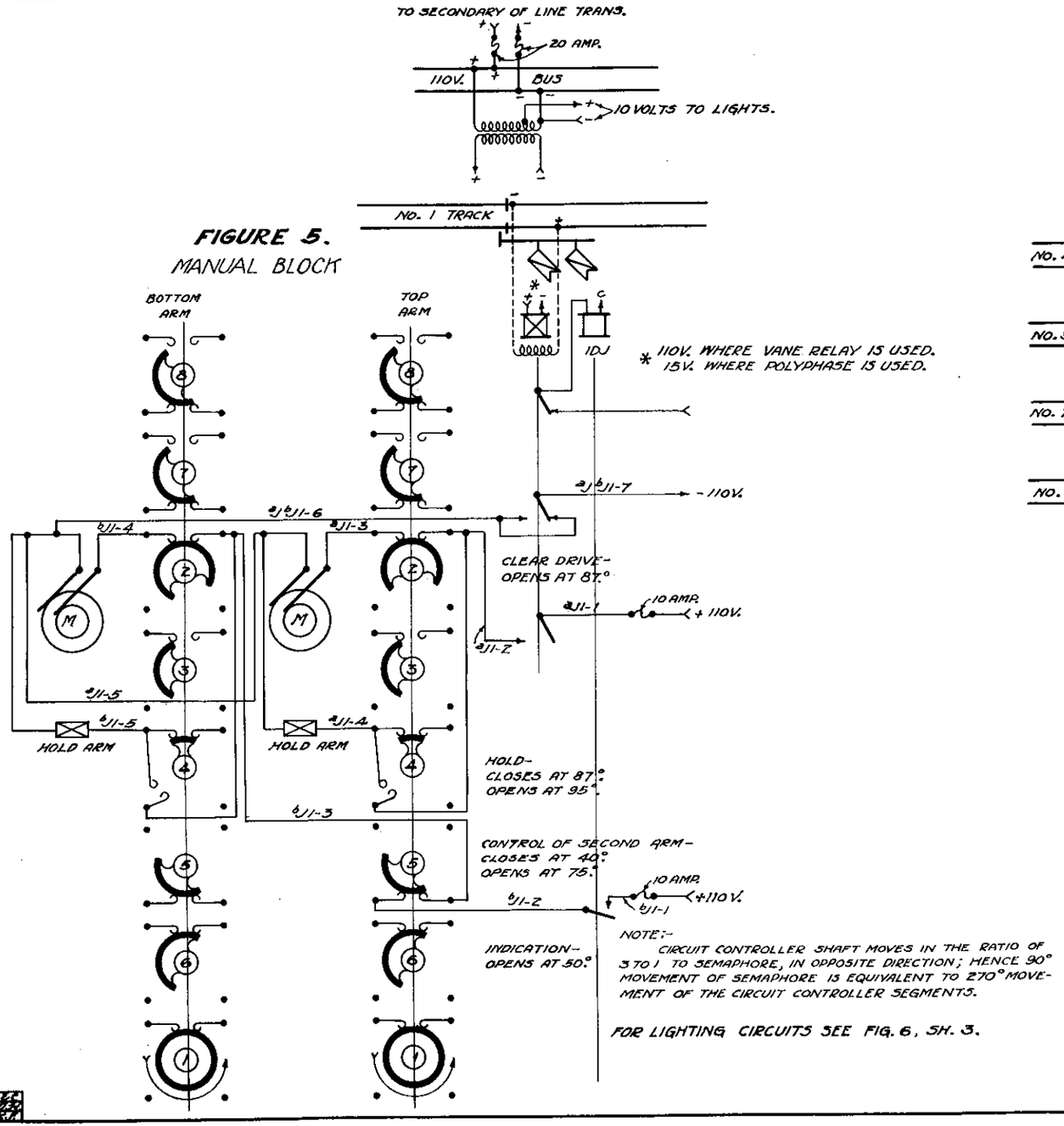

NOTE:-
CIRCUIT CONTROLLER SHAFT MOVES IN THE RATIO OF 3 TO 1 TO SEMAPHORE, IN OPPOSITE DIRECTION; HENCE 90° MOVEMENT OF SEMAPHORE IS EQUIVALENT TO 270° MOVEMENT OF THE CIRCUIT CONTROLLER SEGMENTS.

FOR LIGHTING CIRCUITS SEE FIG. 6, SH. 3.

FIGURE 5.
MANUAL BLOCK

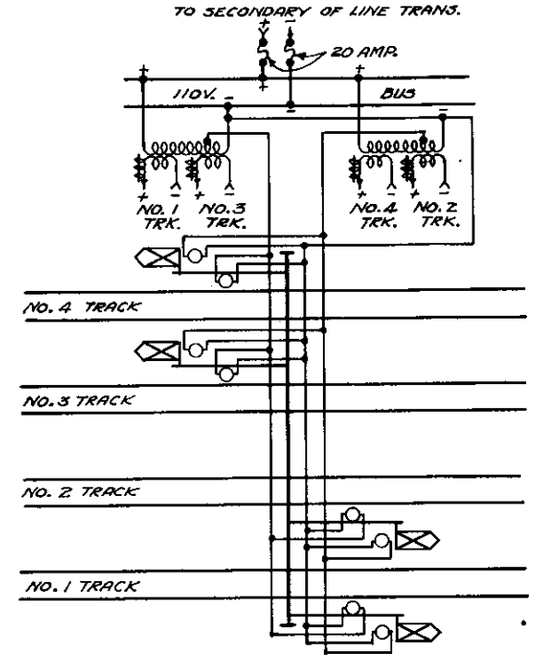

ARRANGEMENT OF LIGHTING CIRCUITS

FIGURE 6.

REVISIONS

FIG. 5 REDRAWN FROM SH. 6 OF FORMER LINES EAST PLAN NO. 1234, DATED 5-27-1912, LAST REVISION 12-17-1919.

SHEET 3 OF 3

S-847

THE PENNSYLVANIA RAILROAD
CONTROL CIRCUITS FOR 110 V. A.C.
"T2" MOTOR SIGNALS

OFFICE OF CHIEF SIGNAL ENGINEER,
PHILA., PA., DEC. 14, 1926.

NOT TO SCALE

Approved
Chief Signal Engineer

Approved
Chief Engineer

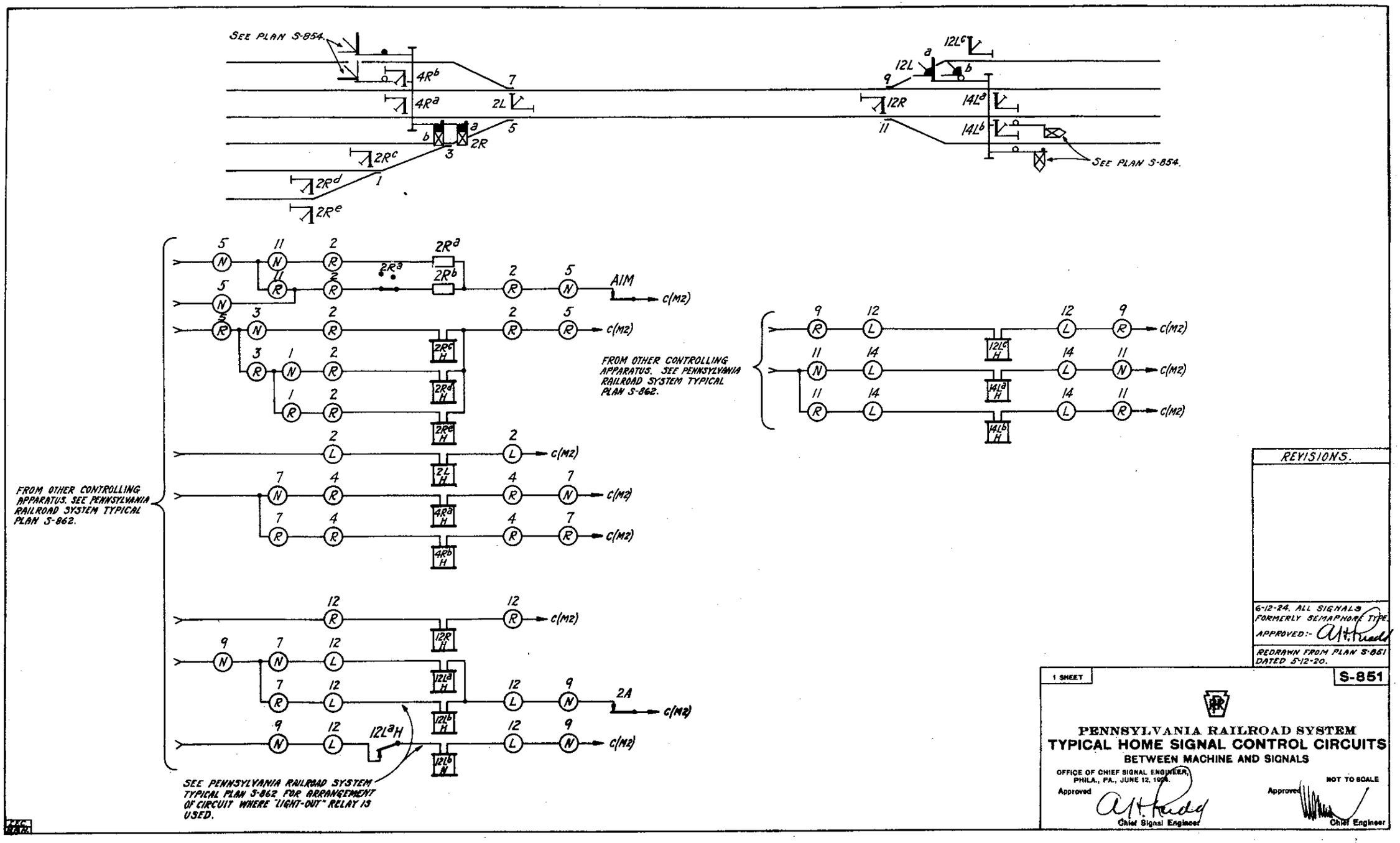

REVISIONS.

6-12-24. ALL SIGNALS FORMERLY SEMAPHORE TYPE.
APPROVED:- A.H. Rudd

REDRAWN FROM PLAN S-851 DATED 5-12-20.

1 SHEET

S-851

PENNSYLVANIA RAILROAD SYSTEM

TYPICAL HOME SIGNAL CONTROL CIRCUITS

BETWEEN MACHINE AND SIGNALS

OFFICE OF CHIEF SIGNAL ENGINEER, PHILA., PA., JUNE 12, 1924.

NOT TO SCALE

Approved A.H. Rudd Chief Signal Engineer

Approved Chief Engineer

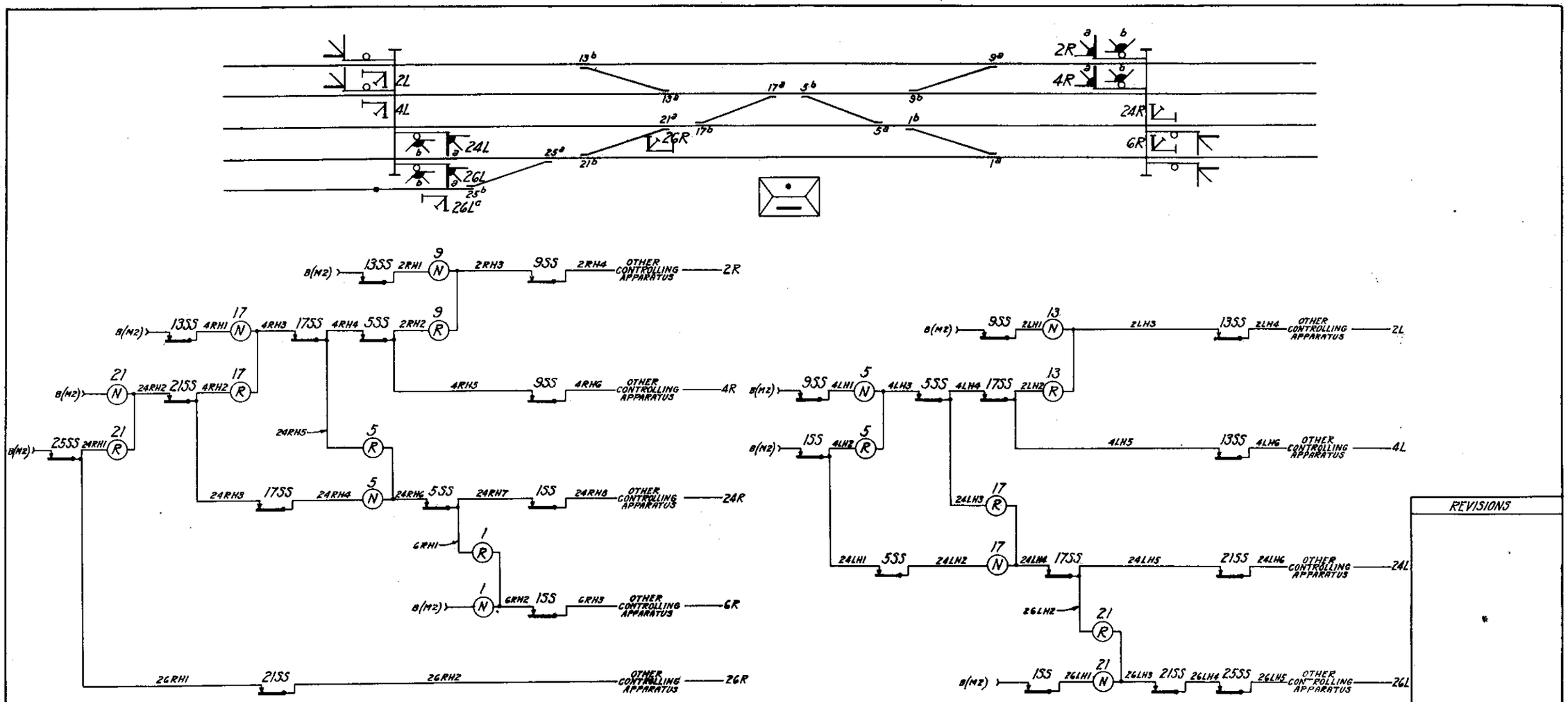

NOTE:-
FOR CONTROL OF SWITCH REPEATING RELAYS SEE PLAN S-821.
FOR OTHER CONTROLLING APPARATUS SEE PLAN S-862 - SH. 1.

SPECIAL MECHANICAL LOCKING

1	LOCKS	17
5	"	9-21
13	"	17
24L	"	5
24R	"	17

D.C. NEUTRAL SWITCH REPEATING RELAYS
ELECTRO-MECHANICAL MACHINE

REVISIONS

REDRAWN FROM APPROVED PLAN S-852-SH.2, DATED 12-6-20, LAST REVISED 12-15-20.

SHEET 1 OF 2

S-852

PENNSYLVANIA RAILROAD SYSTEM

TYPICAL "SS" PROTECTION

OFFICE OF CHIEF SIGNAL ENGINEER, PHILA., PA., DEC. 27, 1924.

NOT TO SCALE

Approved

Chief Signal Engineer

Approved

Chief Engineer

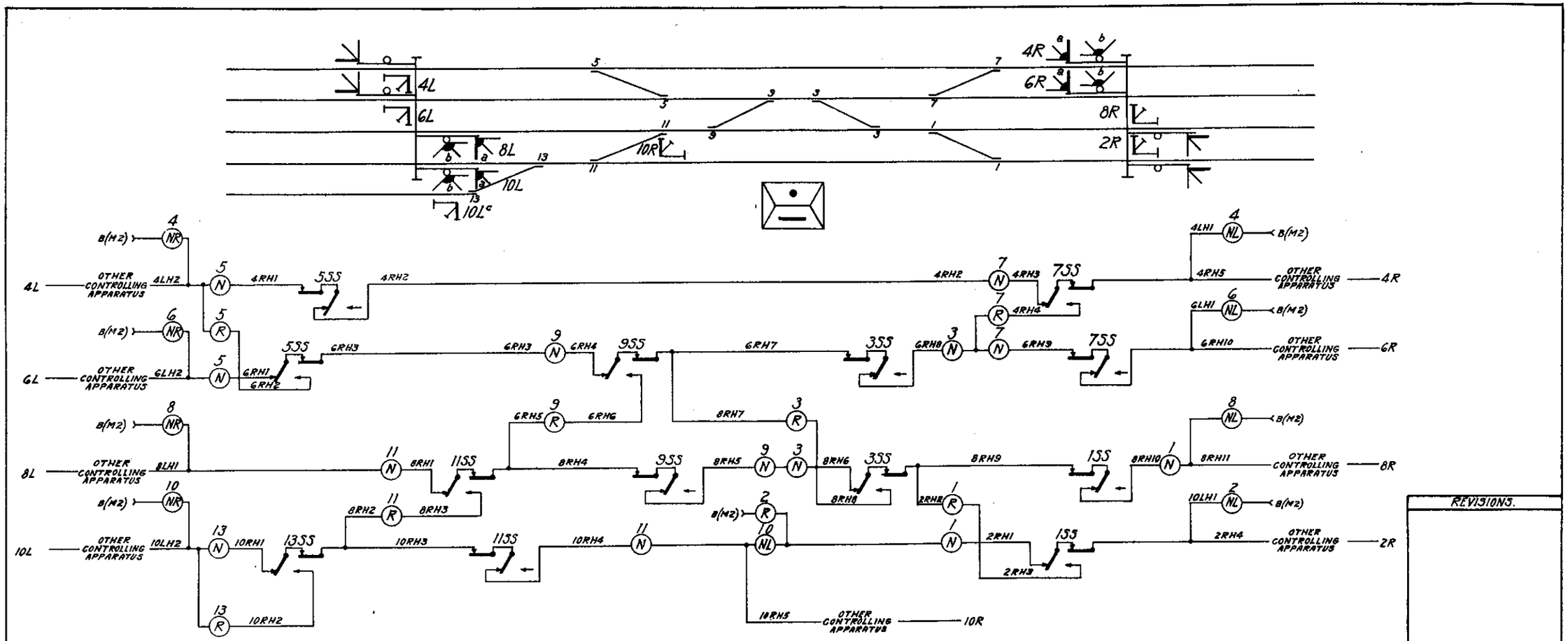

NOTE:-
FOR CONTROL OF SWITCH REPEATING RELAYS SEE PLAN S-822.
FOR OTHER CONTROLLING APPARATUS SEE PLAN S-862-SH.1.

SPECIAL MECHANICAL LOCKING

1	LOCKS	9
3	"	7-11
5	"	9
8L	"	3
8R	"	9

D.C. POLARIZED SWITCH REPEATING RELAYS.
ELECTRO-PNEU. MACHINE.

REVISIONS.

12-27-24. POLAR CONTACTS ON "SS" RELAYS FORMERLY NORMAL TO THE RIGHT.
APPROVED: A.H. Rudd

REDRAWN FROM APPROVED PLAN S-852-SH.3, DATED 12-6-20.

SHEET 2 OF 2

S-852

PENNSYLVANIA RAILROAD SYSTEM

TYPICAL "SS" PROTECTION

OFFICE OF CHIEF SIGNAL ENGINEER, PHILA., PA., DEC. 27, 1924

NOT TO SCALE

Approved A.H. Rudd
Chief Signal Engineer

Approved
Chief Engineer

F.E.C.
R.L.H.
C.A.

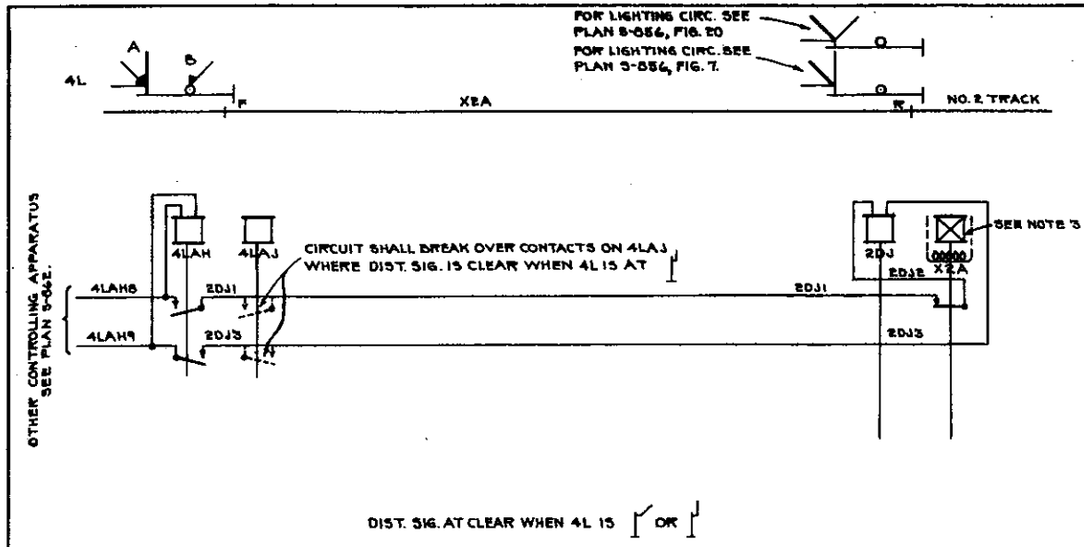

FIG. 1

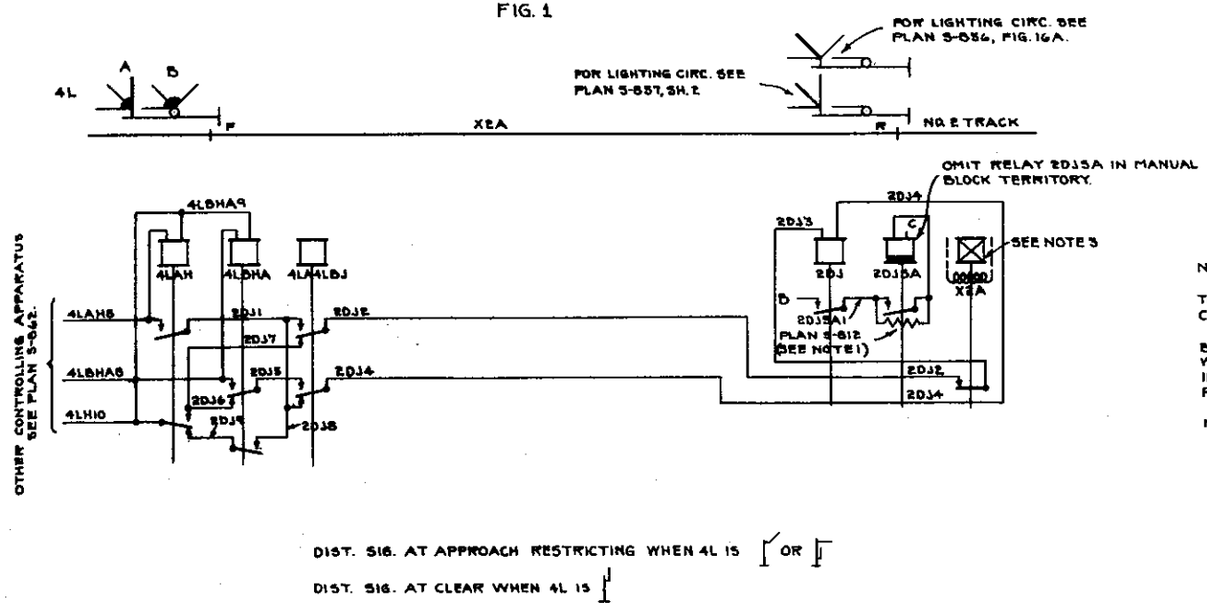

FIG. 2.

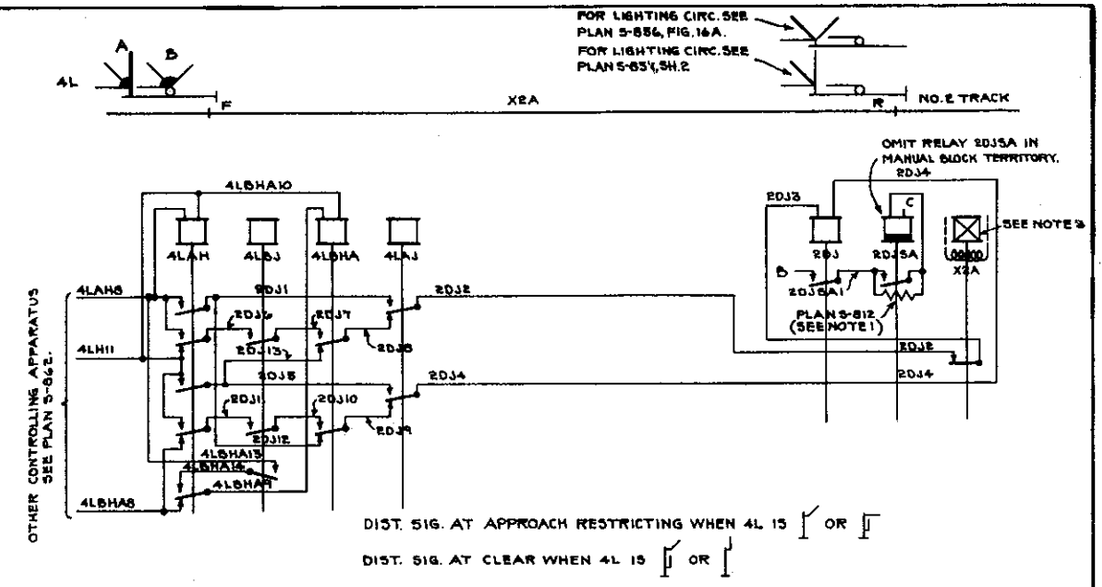

FIG. 3.

NOTE:-

1. WHERE SLOW RELEASING RELAY IS NOT PROVIDED IN THE CONTROL CIRCUITS FOR THE "H" RELAYS, RESISTOR AND CONTACT IN RELAY 2DJ3A SHALL BE OMITTED FROM ITS CONTROL.
2. ALL NON-INTERLOCKED CROSSOVERS, TURNOUTS AND DERAILS BETWEEN HOME AND DISTANT SIGNALS SHALL BE IN ACCORDANCE WITH BASIC PLANS S-228 TO S-233 INCLUSIVE AND SHALL BE INSULATED AND BONDED IN ACCORDANCE WITH STANDARD PLAN S-803.
3. WHERE DIRECT CURRENT TRACK CIRCUITS ARE PROVIDED NEUTRAL D.C. TRACK RELAY SHALL BE USED.

REVISIONS

SUPERSEDES PLAN S-853
DATED 3-3-23, LAST REVISED 3-5-

SHEET 1 OF 2

S-853

THE PENNSYLVANIA RAILROAD

TYPICAL

CONTROL CIRCUITS FOR CLEAR CONTROL OF DISTANT SIGNALS

OFFICE OF CHIEF SIGNAL ENGINEER, PHILA., PA. FEB. 21, 1933

NOT TO SCALE

Approved: Chief Signal Engineer

Approved: Chief Engineer

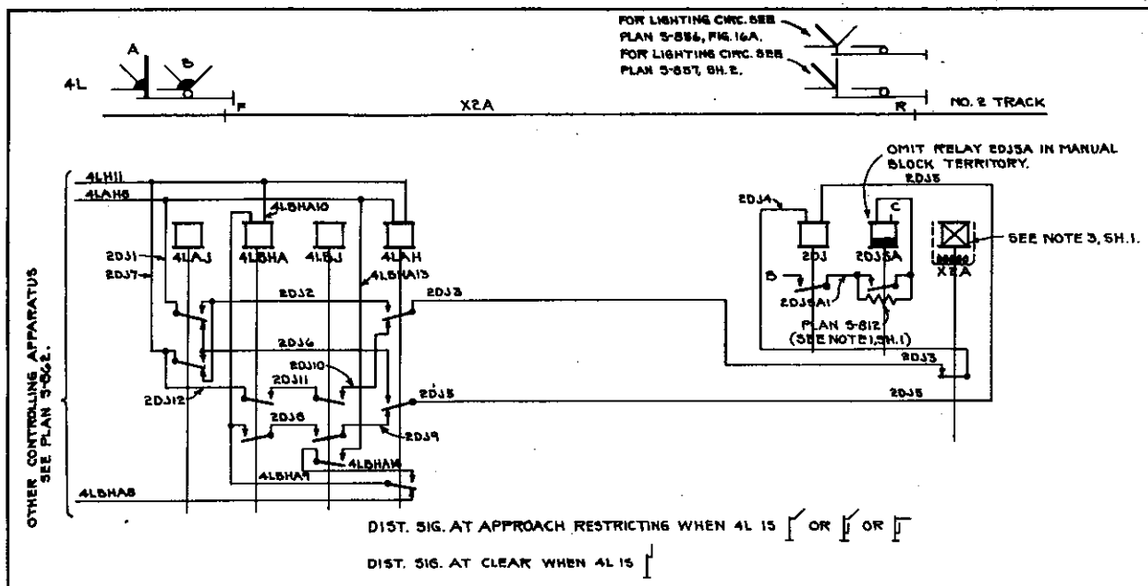

FIG. 4.

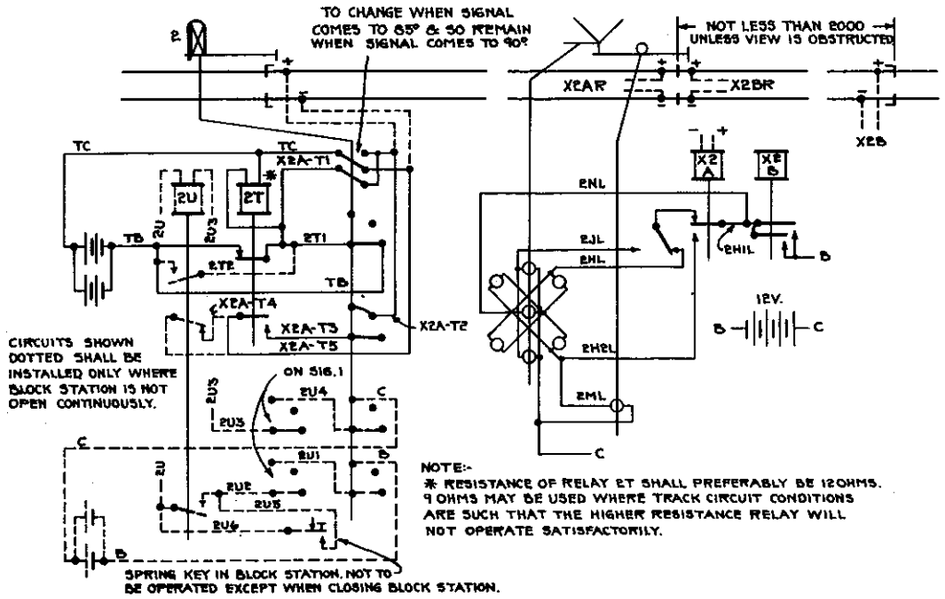

FIG. 5.

REVISIONS

SUPERSEDES PLAN S-853 DATED 3-3-25, LAST REVISED 3-3-28.

SHEET 2 OF 2

S-853

THE PENNSYLVANIA RAILROAD

TYPICAL

CONTROL CIRCUITS FOR CLEAR CONTROL OF DISTANT SIGNALS

OFFICE OF CHIEF SIGNAL ENGINEER
PHILA., PA., FEB. 21, 1953.

NOT TO SCALE.

Approved Chief Signal Engineer.

Approved Chief Engineer.

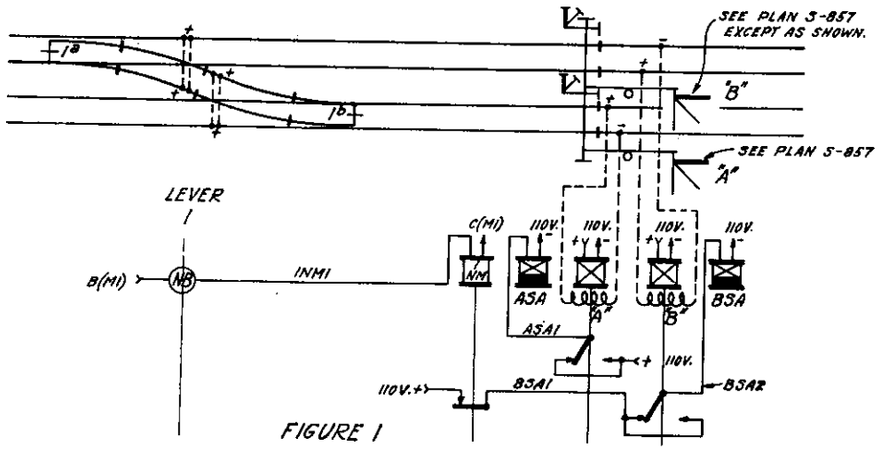

FIGURE 1

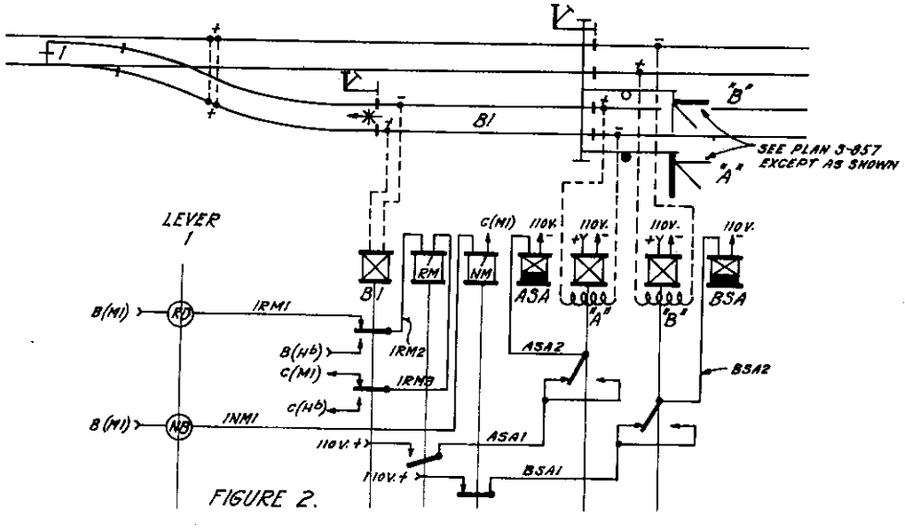

FIGURE 2.

NOTE:

BLOCK SIGNALS SHALL BE CONTROLLED OVER DIVERGING SWITCHES (OR DERAILS) LOCATED IN THE TRACK APPROACHING AND WITHIN 750' OF THE SIGNAL AND THOSE UP TO 1000' MAY BE CONSIDERED.

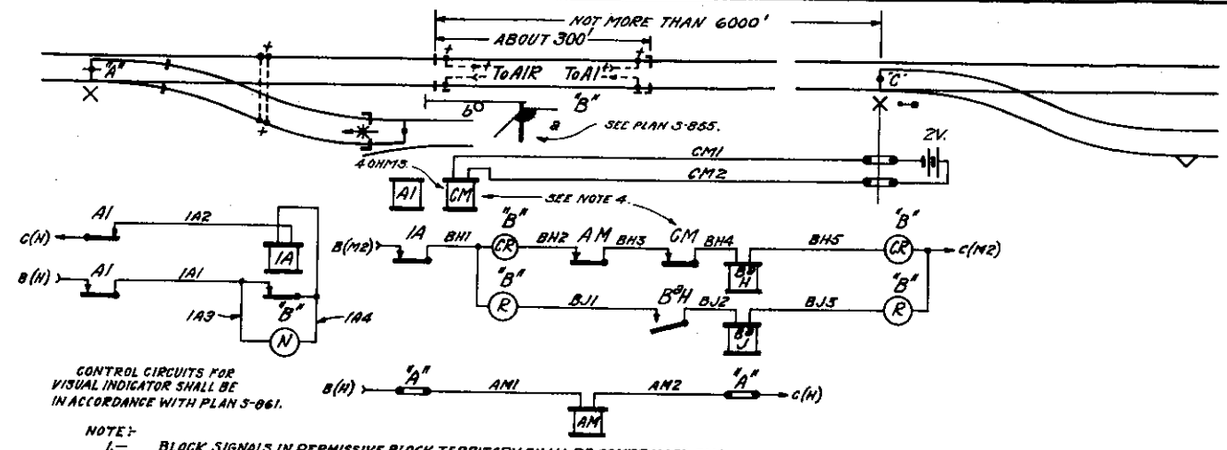

CONTROL CIRCUITS FOR VISUAL INDICATOR SHALL BE IN ACCORDANCE WITH PLAN S-861.

NOTE:-

1.— BLOCK SIGNALS IN PERMISSIVE BLOCK TERRITORY SHALL BE CONTROLLED BY:

A. A TABLE CIRCUIT CONTROLLER EQUIPPED WITH A DEVICE TO STOP THE LEVER AT MID-STROKE, IN GOING FROM NORMAL TO REVERSE, REQUIRING A DISTINCT MOVEMENT BY THE OPERATOR TO MOVE LEVER PAST THE MID-STROKE POSITION.

B. WHERE TOP ARM OF HOME INTERLOCKING SIGNAL IS ALSO A BLOCK SIGNAL IT SHALL BE CONTROLLED AS FOLLOWS:

(a) WHERE U.S. & S. CO'S. POWER OR ELECTRO-MECHANICAL MACHINE IS IN SERVICE, ONE LEVER, EQUIPPED WITH THREE POSITION DEVICE, SHALL BE USED TO CONTROL THE TOP ARM OF THE HOME SIGNAL AND A SECOND LEVER SHALL BE USED TO CONTROL OTHER SIGNALS USUALLY CONTROLLED BY THE ONE LEVER.

(b) WHERE G.R.S. CO'S. POWER OR ELECTRO-MECHANICAL MACHINE IS IN SERVICE A SEPARATE LEVER SHALL BE USED TO CONTROL THE CLEAR POSITION OF THE BLOCK SIGNAL.

C. A BLOCK SIGNAL AT AN INTERLOCKING MAY BE CONTROLLED FROM THE INTERLOCKING MACHINE AS FOLLOWS:

(a) WHERE U.S. & S. CO'S. POWER OR ELECTRO-MECHANICAL MACHINE IS IN SERVICE, BY A LEVER EQUIPPED WITH A THREE POSITION DEVICE.

(b) WHERE G.R.S. CO'S. POWER OR ELECTRO-MECHANICAL MACHINE IS IN SERVICE, BY TWO LEVERS, ONE FOR THE PERMISSIVE AND THE OTHER FOR THE CLEAR BLOCK INDICATION.

2.— WHERE THE SWITCH (OR DERAIL) IS CONTROLLED BY A LEVER IN THE MACHINE, THE CONTROL CIRCUITS FOR THE SIGNAL RELAYS SHALL BE BROKEN OVER A CONTACT ON THE SWITCH LEVER (SEE PLAN S-862, SH. 1) EXCEPT WHERE THERE IS AN ADDITIONAL TRACK SECTION BETWEEN THE SWITCH AND ADVANCE SIGNAL, WHERE ARRANGEMENT SIMILAR TO THAT SHOWN IN FIG. 2 SHALL BE USED.

3.— WHERE BOTH THE BLOCK SIGNAL AND THE SWITCH (OR DERAIL) ARE CONTROLLED BY LEVERS IN THE MACHINE, THE SIGNAL LEVER SHALL MECHANICALLY LOCK THE SWITCH LEVER AND THE SWITCH REPEATING RELAY (AM) SHALL BE OMITTED.

4.— WHERE A FACING POINT SWITCH IS LOCATED NOT MORE THAN 6000' BEYOND THE MANUAL BLOCK SIGNAL ARRANGE CIRCUITS AS FOLLOWS:-

A. PERMISSIVE BLOCK TERRITORY. WHERE TRAFFIC CONDITIONS ARE SUCH THAT NO MATERIAL DELAY WILL RESULT FROM HOLDING THE SIGNAL AT "STOP" WITH THE TRACK OCCUPIED BETWEEN THE SIGNAL AND THE SWITCH, EXTEND TRACK SECTION "A1" TO INCLUDE THE SWITCH, OMITTING THE LINE (CM) RELAY. IF THIS ARRANGEMENT WILL RESULT IN EXCESSIVE DELAY THE LINE (SWITCH REPEATING) RELAY (CM) SHOULD BE PROVIDED. *

B. ABSOLUTE BLOCK TERRITORY. EXTEND TRACK SECTION "A1" TO INCLUDE THE SWITCH, OMITTING THE LINE (CM) RELAY. *

* ALL NON-INTERLOCKED SWITCHES PROTECTED BY THE BLOCK SIGNAL SHALL BE IN ACCORDANCE WITH STANDARD PLANS BASIC NO'S. S-228 TO S-235 INCLUSIVE AND THOSE IN TRACK CIRCUIT TERRITORY SHALL BE INSULATED AND BONDED IN ACCORDANCE WITH PLAN S-803.

FIGURE 3.

REVISIONS

2-17-26. CIRCUITS FOR SIG. "B" AND NOTE 4, FIGURE 3, CHANGED. TITLE FORMERLY "TYPICAL CONTROL CIRCUITS FOR ADVANCE SIGNALS."

APPROVED: A.H. Rudd

4-13-25. RELAYS NM & RM FORMERLY CONTROLLED OVER N & R CONTACTS RESPECTIVELY, FIG. 1 & 2. AUXILIARY CIRCUIT CONTROLLER FORMERLY PROVIDED FOR CLEAR CONTROL OF SIGNAL "B", FIG. 3. FIGS. A & B OMITTED.

APPROVED: A.H. Rudd

REDRAWN FROM PLAN S-854 DATED 12-7-20.

1 SHEET

S-854

THE PENNSYLVANIA RAILROAD

TYPICAL CONTROL CIRCUITS FOR BLOCK SIGNALS

OFFICE OF CHIEF SIGNAL ENGINEER, PHILA., PA., APR. 13, 1925

Approved A.H. Rudd Chief Signal Engineer

NOT TO SCALE

Approved Chief Engineer

NOTE:-

For index of aspects, see Sheet No. 2.

For arrangement of terminals in terminal box, see Pennsylvania Railroad System Standard Plan No. S-858.

A separate pair of wires (positive and negative) shall be run from the relay location to each signal mast.

Lighting circuits shall be so adjusted as to have uniform voltage at the lamps. The voltage shall be between the following limits:

	Maximum	Minimum	Recommended
High Signals - -	11.5 V.	11.0 V.	-
Dwarf Signals- -	5.0 V.	4.0 V.	4.2 V. or 4.3 V.

Lamps shall be in accordance with Pennsylvania Railroad System Standard Plan Basic No. S-483.

Signal wires and control relays have been numbered from arbitrary signal numbers and correct number of the signal controlled shall be substituted.

Complete control of all relays shall be shown on circuit plan of interlocking. For typical control circuits for signal controlling relays, see Pennsylvania Railroad System Typical Circuit Plan No. S-862.

Where D.C. lighting circuits are installed, arrange "Light-out" (EM) relay thus:-

For Primary Battery:

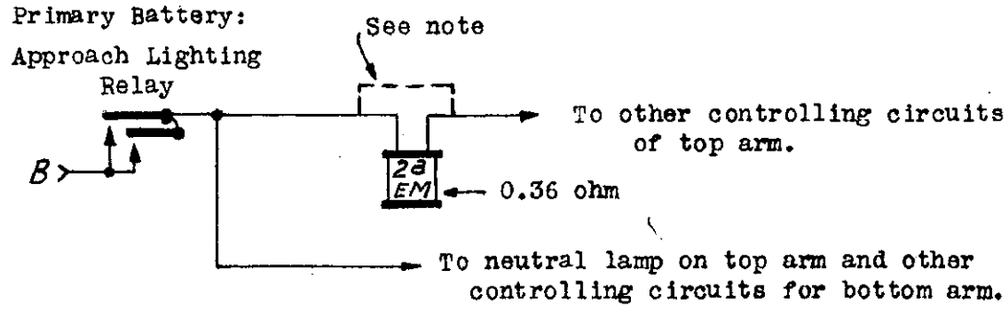

For Storage Batteries circuits shall be similarly arranged except that approach lighting relay shall be omitted.

Where no "light-out" (2^aEM) relay is used circuits shall be arranged as shown by dotted lines.

For typical arrangement for lighting position-light home and advance signals when normal power fails, see Pennsylvania Railroad System Typical Circuit Plan No. S-805. Where this arrangement is used, circuits shall be modified accordingly and shown in detail on circuit plan to be prepared for each interlocking or block signal installation.

REVISIONS.

REWRITTEN FROM SHEET 1 OF PLAN S-855 DATED 10-18-21, LAST REVISED 11-9-23.

SHEET 1 OF 9

S-855

PENNSYLVANIA RAILROAD SYSTEM
STANDARD

LIGHTING CIRCUITS FOR POSITION LIGHT HOME INTERLOCKING & BLOCK SIGNALS

OFFICE OF CHIEF SIGNAL ENGINEER,
PHILA., PA., JAN. 26, 1925.

NOT TO SCALE

Approved

Chief Signal Engineer

Approved

Chief Engineer

CEC
H.A.H.

TOP ARM.				BOTTOM ARM.								DWARF SIGNAL.	
ASPECT	FIGURE NUMBER	ASPECT	FIGURE NUMBER	ASPECT	FIGURE NUMBER	ASPECT	FIGURE NUMBER	ASPECT	FIGURE NUMBER	ASPECT	FIGURE NUMBER	ASPECT	FIGURE NUMBER
	1		7		11 AUTOMATIC BLOCK TERRITORY.		17 AUTOMATIC BLOCK TERRITORY.		23 AUTOMATIC BLOCK TERRITORY.				31
	2		8		12 MANUAL OR CONTROLLED MANUAL BLOCK TERRITORY.		18 AUTOMATIC BLOCK TERRITORY.		24 AUTOMATIC BLOCK TERRITORY.				32
	3				13 MANUAL OR CONTROLLED MANUAL BLOCK TERRITORY.		19 MANUAL OR CONTROLLED MANUAL BLOCK TERRITORY.		25 MANUAL OR CONTROLLED MANUAL BLOCK TERRITORY.		30 TAKE SIDING INDICATOR.		33
	4				14 AUTOMATIC BLOCK TERRITORY.		20 AUTOMATIC BLOCK TERRITORY.		26 AUTOMATIC, MANUAL OR CONTROLLED MANUAL BLOCK TERRITORY.				34
	5				15 MANUAL OR CONTROLLED MANUAL BLOCK TERRITORY.		21 MANUAL OR CONTROLLED MANUAL BLOCK TERRITORY.		27 AUTOMATIC BLOCK TERRITORY.				35
	6				16 MANUAL OR CONTROLLED MANUAL BLOCK TERRITORY.		22 MANUAL OR CONTROLLED MANUAL BLOCK TERRITORY.		NOTE:- SEE FIGURES 1, 3 & 5 FOR SIMILAR ARRANGEMENT IN MANUAL OR CONTROLLED MANUAL BLOCK TERRITORY.				

INDEX.

REVISIONS.

REDRAWN FROM SHEET 2 OF PLAN S-855 DATED 10-18-21, LAST REVISED 5-18-22.

SHEET 2 OF 9

S-855

PENNSYLVANIA RAILROAD SYSTEM
STANDARD

LIGHTING CIRCUITS FOR POSITION LIGHT HOME INTERLOCKING & BLOCK SIGNALS

OFFICE OF CHIEF SIGNAL ENGINEER,
PHILA., PA., JAN. 26, 1928

NOT TO SCALE

Approved

Chief Signal Engineer

Approved

Chief Engineer

SEC
H.A.H.

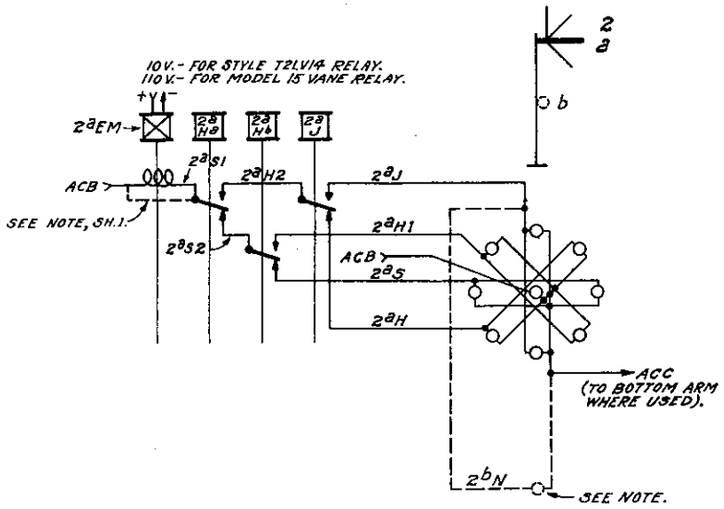

FIGURE 1.

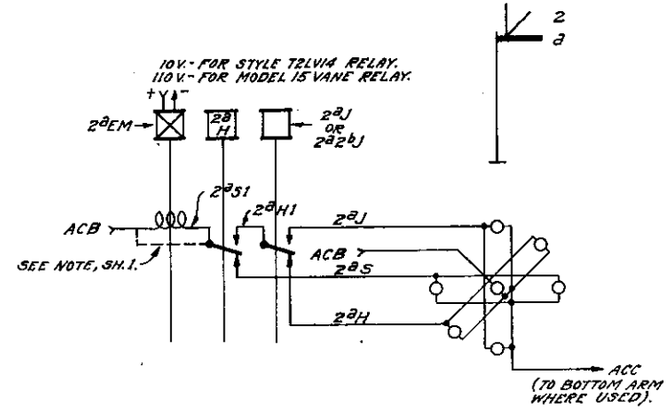

FIGURE 2.

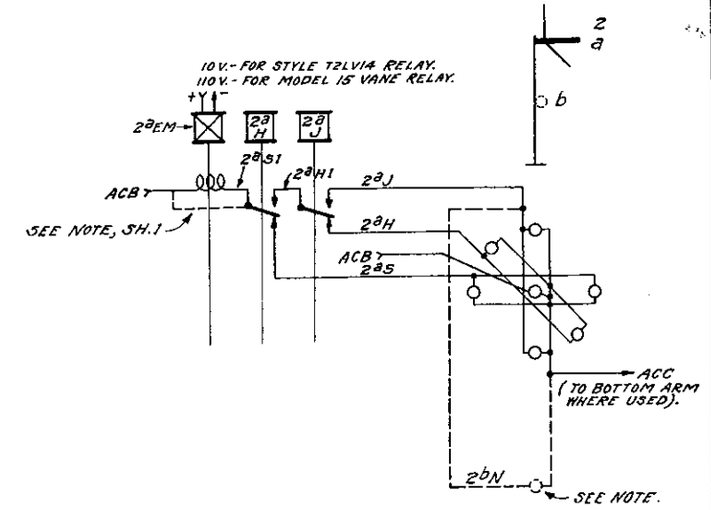

FIGURE 3.

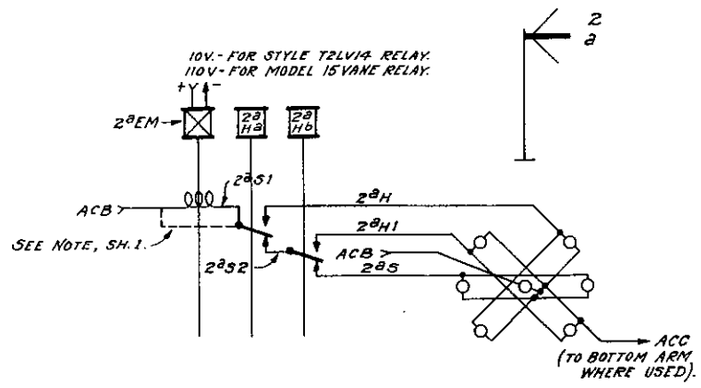

FIGURE 4.

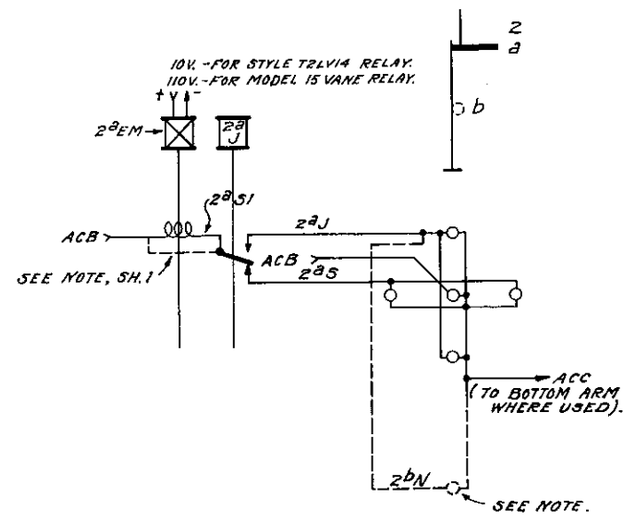

FIGURE 5.

NOTE:-
IN MANUAL OR CONTROLLED MANUAL BLOCK TERRITORY WHERE ONLY THE MARKER LIGHT IS USED IN ADDITION TO THE TOP ARM, THE "LIGHT-OUT" RELAY SHALL NOT BE USED AND CIRCUITS SHALL BE ARRANGED AS SHOWN IN DOTTED LINES.

FOR GENERAL NOTES SEE SHEET NO.1.

TOP ARM.

REVISIONS.

1-26-25. CIRCUITS FOR MARKER LIGHT IN MANUAL OR CONTROLLED MANUAL BLOCK TERRITORY ADDED.
APPROVED:- A.H. Rudd

REDRAWN FROM TOP ARM CONTROL OF SHEETS 3 TO 18 INC. OF PLAN S-855 DATED 10-18-21, SHS. 3,4,6,7,8,9,12,13,15 & 16 LAST REVISED 11-9-23.

SHEET 3 OF 9

S-855

PENNSYLVANIA RAILROAD SYSTEM
STANDARD
LIGHTING CIRCUITS FOR POSITION LIGHT HOME INTERLOCKING & BLOCK SIGNALS

OFFICE OF CHIEF SIGNAL ENGINEER,
PHILA., PA., JAN. 20, 1925.

NOT TO SCALE

Approved A.H. Rudd
Chief Signal Engineer

Approved
Chief Engineer

EEC
R.B.H.

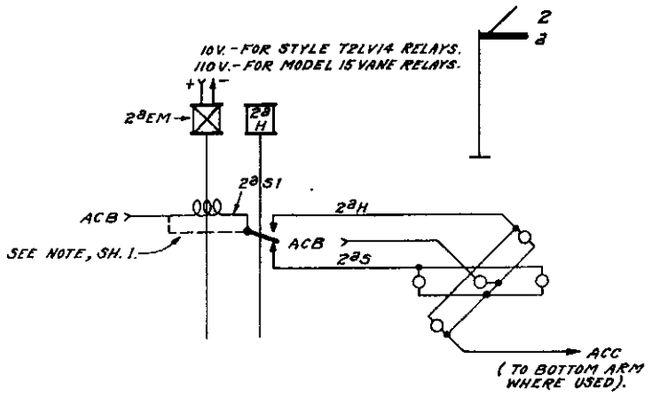

FIGURE 6.

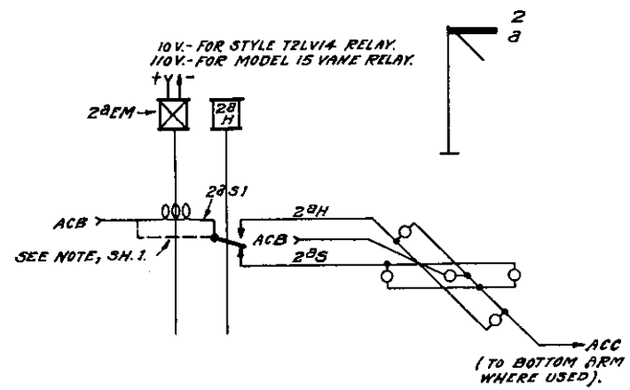

FIGURE 7.

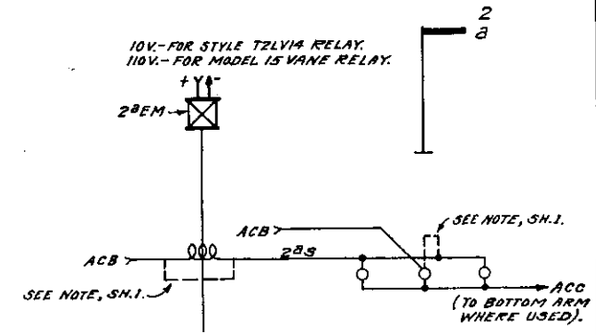

FIGURE 8.

FOR GENERAL NOTES SEE SHEET NO. 1.

TOP ARM.

REVISIONS.

REDRAWN FROM TOP ARM CONTROL OF SHEETS 19 TO 29 INC. OF PLAN S-855 DATED 10-18-21, SHS. 19, 20, 21, 24, 25, 27, 28 & 29 LAST REVISED 11-9-23

SHEET 4 OF 9

S-855

PENNSYLVANIA RAILROAD SYSTEM
STANDARD

LIGHTING CIRCUITS FOR POSITION LIGHT HOME INTERLOCKING & BLOCK SIGNALS

OFFICE OF CHIEF SIGNAL ENGINEER,
PHILA., PA., JAN. 20, 1925

NOT TO SCALE

Approved
Chief Signal Engineer

Approved
Chief Engineer

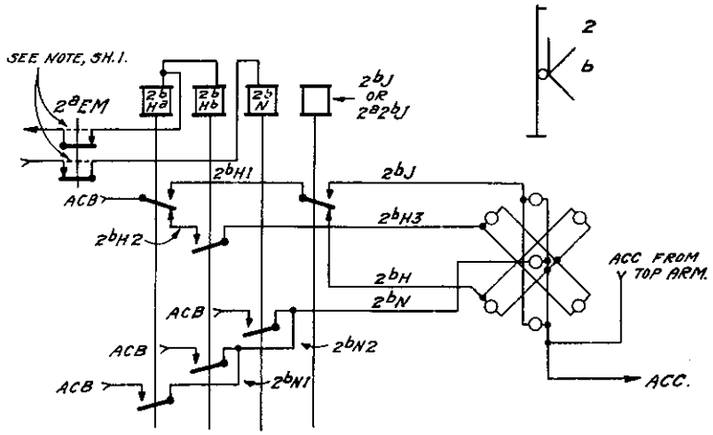

AUTOMATIC BLOCK TERRITORY.
FIGURE 11.

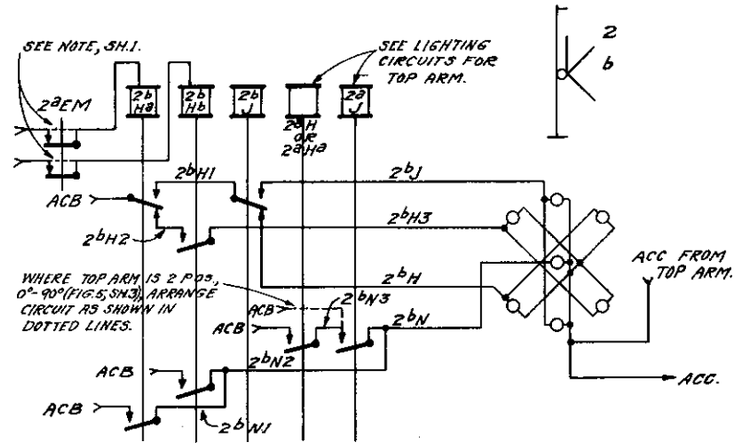

MANUAL OR CONTROLLED MANUAL BLOCK TERRITORY.
FIGURE 12.

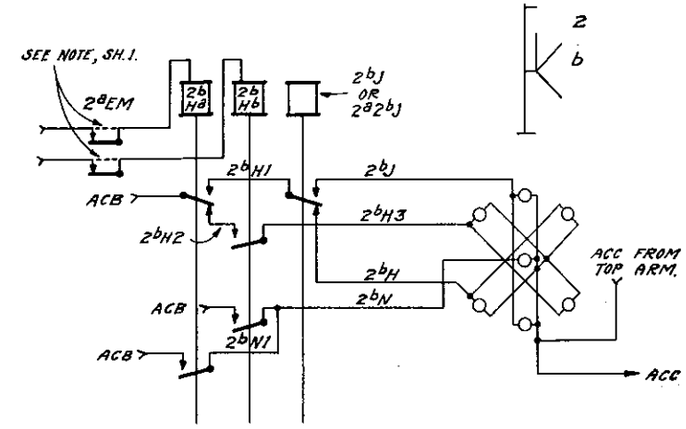

MANUAL OR CONTROLLED MANUAL BLOCK TERRITORY.
FIGURE 13.

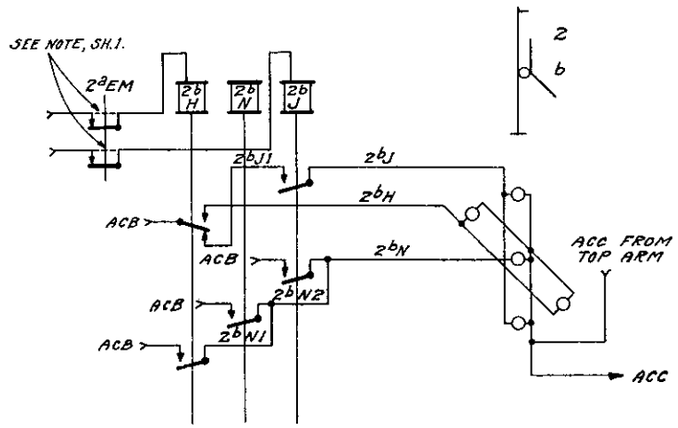

AUTOMATIC BLOCK TERRITORY.
FIGURE 14.

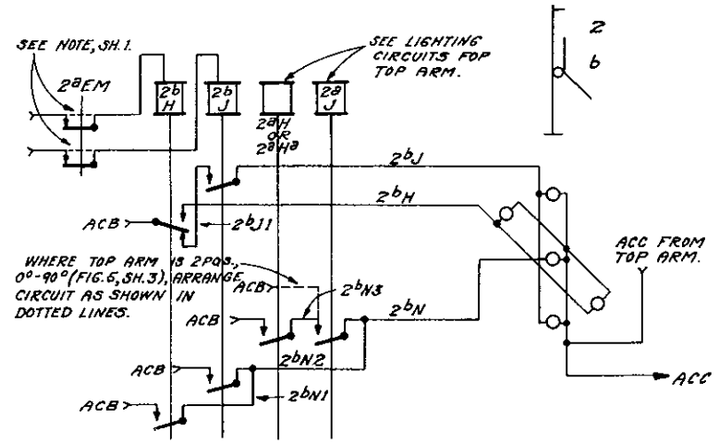

MANUAL OR CONTROLLED MANUAL BLOCK TERRITORY.
FIGURE 15.

FOR GENERAL NOTES SEE SHEET NO.1.

BOTTOM ARM.

REVISIONS.

SHEET 5 OF 9

S-855

PENNSYLVANIA RAILROAD SYSTEM
STANDARD

LIGHTING CIRCUITS FOR POSITION LIGHT HOME INTERLOCKING & BLOCK SIGNALS

OFFICE OF CHIEF SIGNAL ENGINEER,
PHILA., PA., JAN. 26, 1926.

NOT TO SCALE

Approved
Chief Signal Engineer

Approved
Chief Engineer

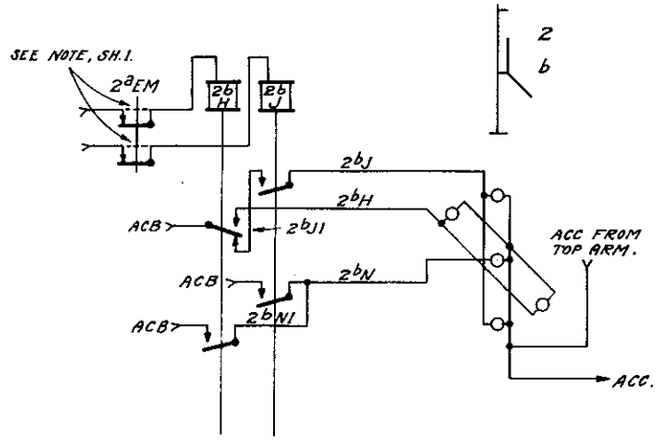

MANUAL OR CONTROLLED MANUAL BLOCK TERRITORY.

FIGURE 16.

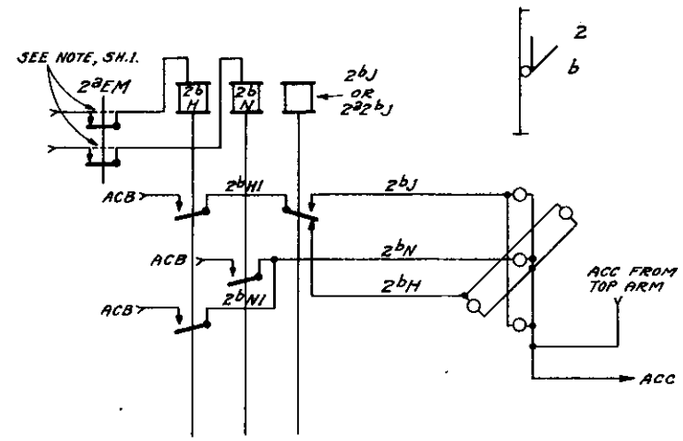

AUTOMATIC BLOCK TERRITORY.

FIGURE 17.

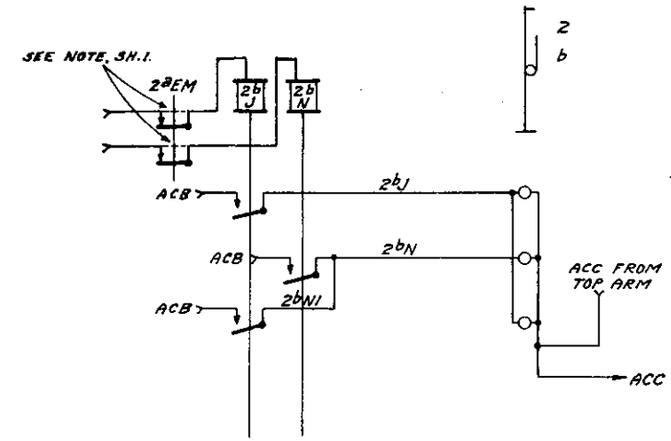

AUTOMATIC BLOCK TERRITORY.

FIGURE 18.

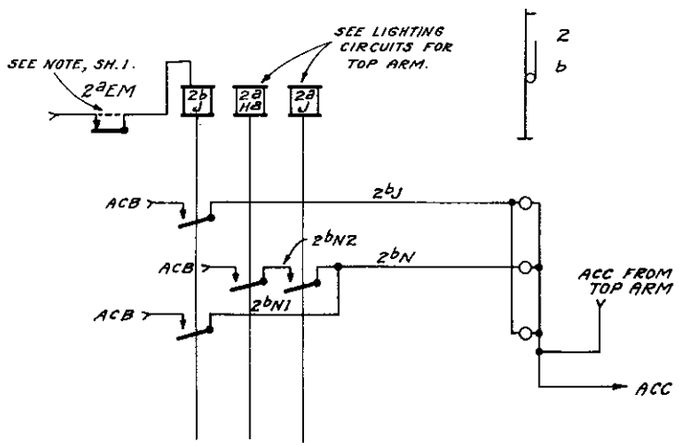

MANUAL OR CONTROLLED MANUAL BLOCK TERRITORY.

FIGURE 19.

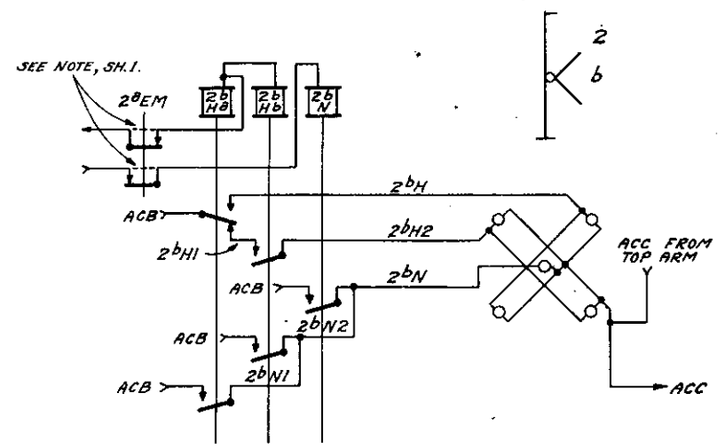

AUTOMATIC BLOCK TERRITORY.

FIGURE 20.

FOR GENERAL NOTES SEE SHEET NO.1.

BOTTOM ARM.

REVISIONS.

1-26-25. FIGURES 16, 19 AND 20 ADDED.
APPROVED:- [signature]

REDRAWN FROM BOTTOM ARM CONTROL OF SHEETS 3&6, 7, 8, 12, 15, 19, 20, 24 & 27 OF PLAN S-865 DATED 10-18-21, LAST REVISED 11-9-23.

SHEET 6 OF 9

S-855

PENNSYLVANIA RAILROAD SYSTEM
STANDARD

LIGHTING CIRCUITS FOR POSITION LIGHT HOME INTERLOCKING & BLOCK SIGNALS

OFFICE OF CHIEF SIGNAL ENGINEER,
PHILA., PA., JAN. 26, 1926.

NOT TO SCALE

Approved [signature]
Chief Signal Engineer

Approved [signature]
Chief Engineer

RCC
NAH

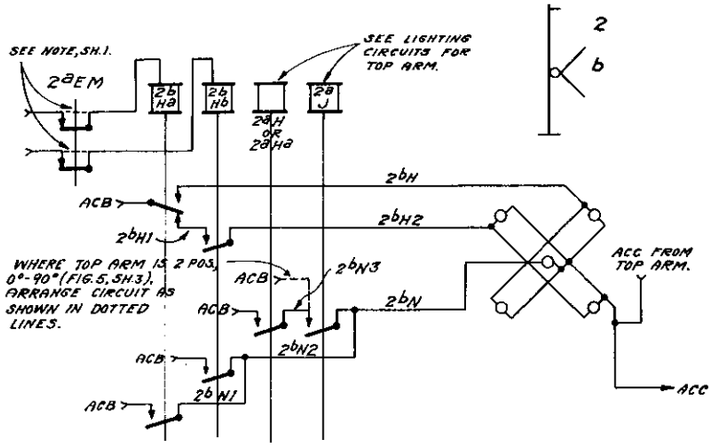

MANUAL OR CONTROLLED MANUAL BLOCK TERRITORY.

FIGURE 21.

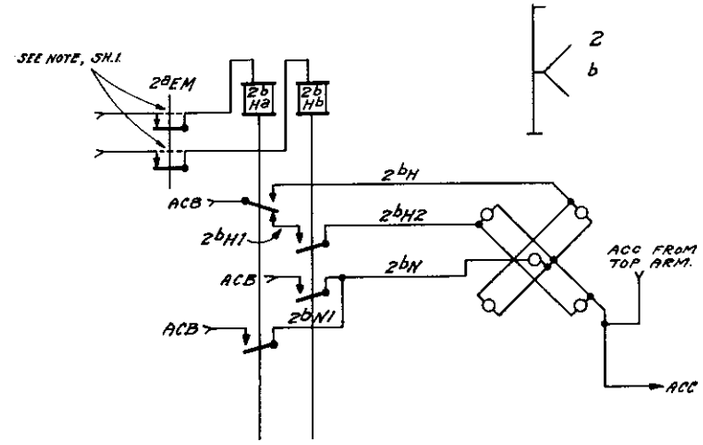

MANUAL OR CONTROLLED MANUAL BLOCK TERRITORY.

FIGURE 22.

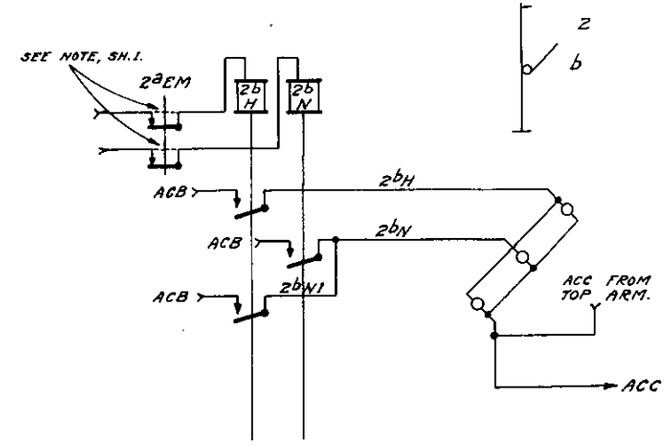

AUTOMATIC BLOCK TERRITORY.

FIGURE 23.

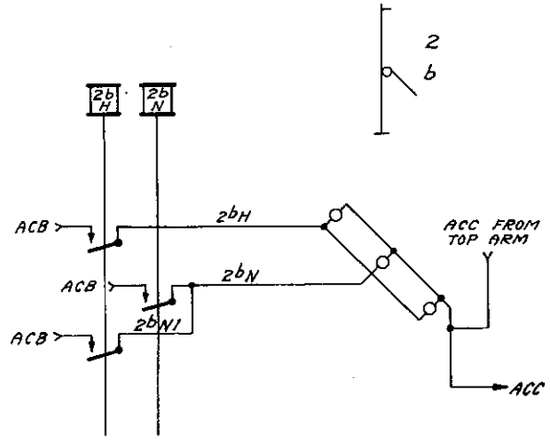

AUTOMATIC BLOCK TERRITORY.

FIGURE 24.

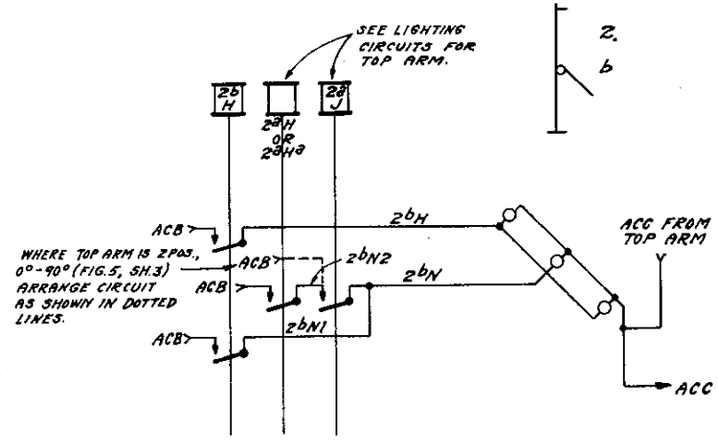

MANUAL OR CONTROLLED MANUAL BLOCK TERRITORY.

FIGURE 25.

FOR GENERAL NOTES SEE SHEET NO.1.

BOTTOM ARM.

REVISIONS.

1-26-25. FIGURES 21, 22, 24 AND 25 ADDED.
APPROVED:- A.H. Rudd

REDRAWN FROM BOTTOM ARM CONTROL OF SHEETS 9, 21 AND 18 OF PLAN S-855F-DATED 10-18-21. LAST REVISED 11-9-23.

SHEET 7 OF 9

S-855

PENNSYLVANIA RAILROAD SYSTEM
STANDARD

LIGHTING CIRCUITS FOR POSITION LIGHT HOME INTERLOCKING & BLOCK SIGNALS

OFFICE OF CHIEF SIGNAL ENGINEER,
PHILA., PA., JAN. 26, 1925

NOT TO SCALE

Approved A.H. Rudd
Chief Signal Engineer

Approved
Chief Engineer

REC. H.A.R.

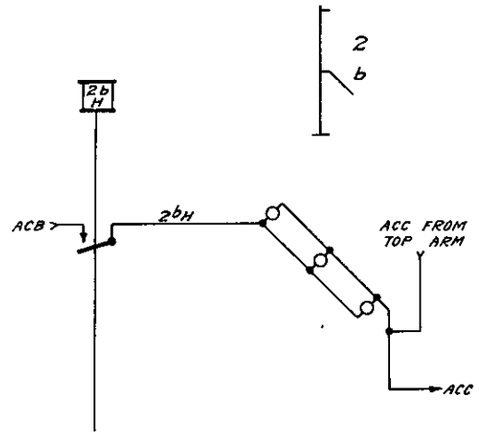

AUTOMATIC, MANUAL OR CONTROLLED MANUAL BLOCK TERRITORY.

FIGURE 26.

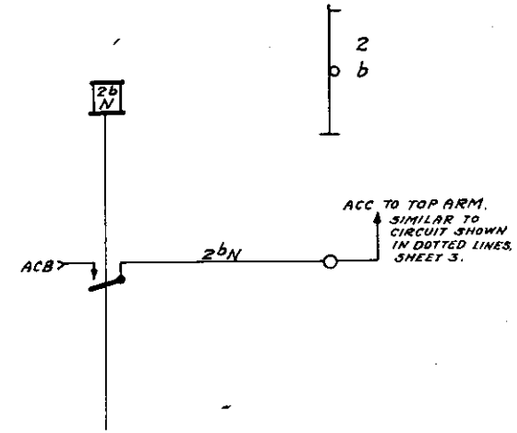

AUTOMATIC BLOCK TERRITORY.

FIGURE 27.

NOTE:- SEE SHEET 3 FOR SIMILAR ARRANGEMENT IN MANUAL OR CONTROLLED MANUAL BLOCK TERRITORY.

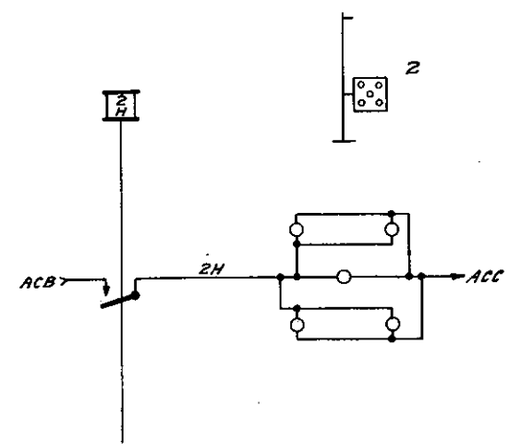

TAKE SIDING INDICATOR.

FIGURE 30.

FOR GENERAL NOTES SEE SHEET NO. 1.

BOTTOM ARM &
TAKE SIDING INDICATOR.

REVISIONS.

1-26-25. FIGURE 26 ADDED.
APPROVED:- A.H. Rudd

REDRAWN FROM BOTTOM ARM CONTROL OF SHEETS 10, 22 & 34 OF PLAN S-855 DATED 10-18-21.

SHEET 8 OF 9

S-855

PENNSYLVANIA RAILROAD SYSTEM
STANDARD

LIGHTING CIRCUITS FOR POSITION LIGHT HOME INTERLOCKING & BLOCK SIGNALS

OFFICE OF CHIEF SIGNAL ENGINEER,
PHILA., PA., JAN. 26, 1925.

NOT TO SCALE

Approved A.H. Rudd
Chief Signal Engineer

Approved
Chief Engineer

T.E.C.
H.A.H.

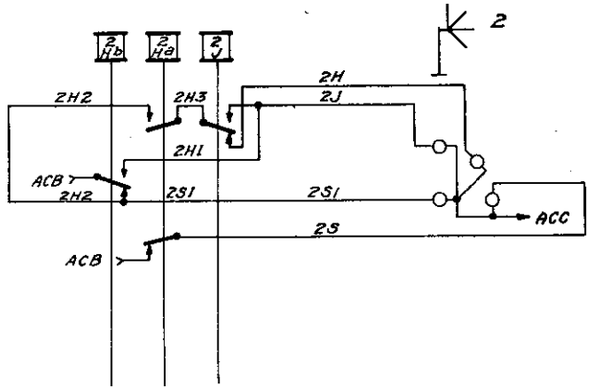

FIGURE 31.

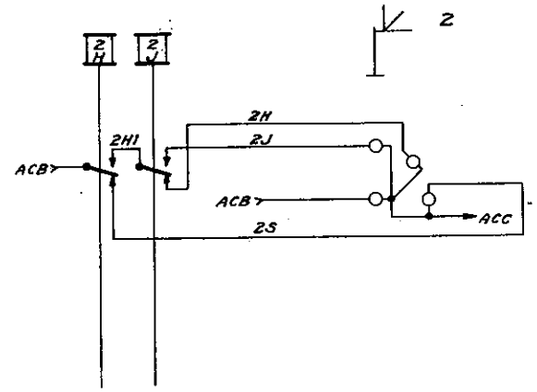

FIGURE 32.

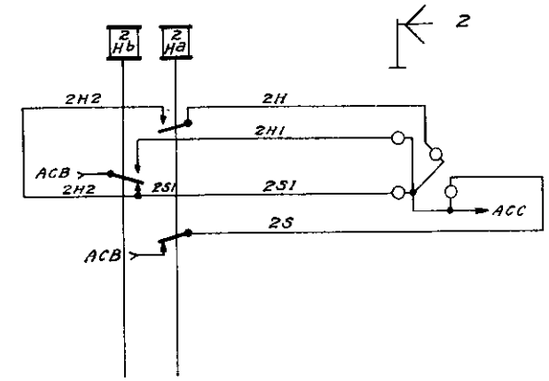

FIGURE 33.

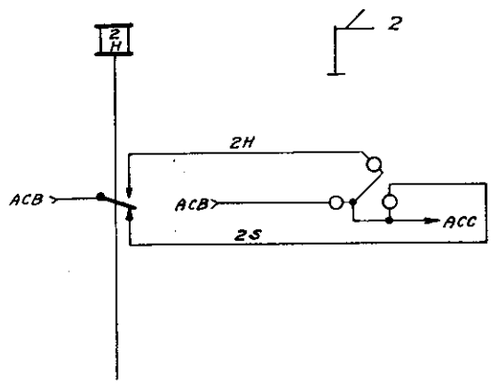

FIGURE 34.

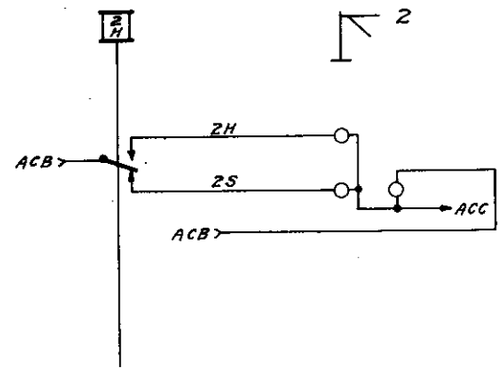

FIGURE 35.

FOR GENERAL NOTES SEE SHEET NO.1.

DWARF SIGNAL.

REVISIONS.

REDRAWN FROM SHEETS 30, 31, 32 & 33 OF PLAN S-855 DATED 10-18-21 AND SHEET 35 DATED 5-18-22.

SHEET 9 OF 9

S-855

PENNSYLVANIA RAILROAD SYSTEM
STANDARD

LIGHTING CIRCUITS FOR POSITION LIGHT HOME INTERLOCKING & BLOCK SIGNALS

OFFICE OF CHIEF SIGNAL ENGINEER,
PHILA., PA., JAN. 26, 1926.

NOT TO SCALE

Approved

Chief Signal Engineer

Approved

Chief Engineer

REC
H.A.H.

INDEX	
ASPECT	SHEET NUMBER
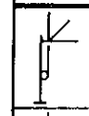	2 THREE BLOCK INDICATION
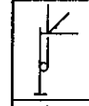	3 TWO BLOCK INDICATION
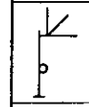	4
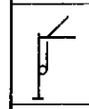	5
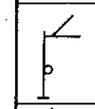	6
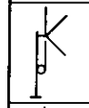	7
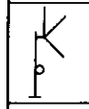	8
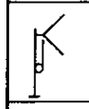	9
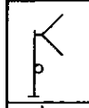	10
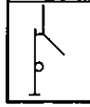	11 DIST. SWITCH SIGNAL

NOTE:-

1. ARRANGEMENTS SHOWN IN FIGURES 3,6,9,12 AND 15 COVER EXISTING INSTALLATIONS AND SHALL BE USED FOR NEW WORK AND RENEWALS WHERE THERE IS LITTLE OR NO PROBABILITY OF CAB SIGNALS OR TRAIN CONTROL BEING PROVIDED.
2. WHERE D.C. SLOW ACTING RELAYS ARE SUBSTITUTED FOR A.C. SLOW ACTING RELAYS MARKED Ø THEY SHALL HAVE A RETARDED-PICK UP AND A RETARDED DROP-AWAY OF NOT LESS THAN 0.5 SECONDS AND SHALL BE CONTROLLED DIRECT FROM A RECTIFIER OR BATTERY AT THE SIGNAL LOCATION. WHERE POLARIZED TRACK CIRCUITS ARE USED THE POLE-CHANGING CIRCUITS SHALL BE SIMILAR TO THOSE WHERE SV-30 OR SV-32 RELAYS ARE USED.
3. FOR ARRANGEMENT OF TERMINALS IN TERMINAL BOX SEE STANDARD PLAN S-858.
4. EACH MAST SHALL HAVE SEPARATE POSITIVE AND NEGATIVE WIRES.
5. LIGHTING CIRCUITS SHALL BE SO ADJUSTED AS TO HAVE UNIFORM VOLTAGE AT THE LAMPS. THE VOLTAGE SHALL BE BETWEEN THE FOLLOWING LIMITS:- MAXIMUM 11.5V.; MINIMUM 11.0V., KEEPING IT AS NEAR THE MAXIMUM AS PRACTICABLE.
6. LAMPS SHALL BE IN ACCORDANCE WITH STANDARD PLAN BASIC NO. S-483.
7. ALL CROSSOVERS, TURNOUTS AND DERAILS BETWEEN HOME AND DISTANT SIGNALS SHALL BE IN ACCORDANCE WITH STANDARD PLANS BASIC NOS. S-228 TO S-233 INCLUSIVE, AND SHALL BE INSULATED AND BONDED IN ACCORDANCE WITH STANDARD PLAN S-803.
8. SIGNAL WIRES AND CONTROL RELAYS HAVE BEEN NUMBERED FROM ARBITRARY TRACK NUMBER AND CORRECT NUMBER FOR THE TRACK OVER WHICH SIGNAL GOVERNS SHOULD BE SUBSTITUTED.
9. CONTROL OF DISTANT SIGNAL RELAYS ($1DJ^a$, $1DJ^b$, 1DJ, ETC.) SHALL BE SHOWN ON CIRCUIT PLAN OF INTERLOCKING. FOR TYPICAL ARRANGEMENT SEE TYPICAL CIRCUIT PLAN S-853.
10. TRACK CIRCUITS SHOWN ARE TYPICAL. DETAIL ARRANGEMENT OF TRACK CIRCUITS SHOULD BE MADE FOR EACH INSTALLATION TO SUIT LOCAL CONDITIONS AND REQUIREMENTS.
11. WHERE NO "LIGHT-OUT" (1DEM) RELAY IS USED CIRCUITS SHALL BE ARRANGED AS SHOWN BY DOTTED LINES.
12. WHERE DISTANT SIGNAL IS ALSO THE ADVANCE SIGNAL FOR ANOTHER INTERLOCKING THE POLARIZED TRACK FEED FOR SECTION IN THE REAR OF THE SIGNAL SHALL BE OMITTED AND THE PRIMARY SIDE OF THE TRACK TRANSFORMER SHALL BE CONNECTED DIRECT TO THE 110 V. BUS.
13. WHERE DIRECTION OF TRAFFIC IS NORTH AND SOUTH SUBSTITUTE LETTER "N" FOR "E", AND "S" FOR "W" IN LINE CONTROL CIRCUITS.
14. FOR D.C. TRACK CIRCUITS, TRACK BATTERY SHALL CONSIST OF NOT LESS THAN TWO GRAVITY CELLS OR CAUSTIC-SODA CELLS OF EQUIVALENT VOLTAGE. CAUSTIC-SODA BATTERIES SHALL BE IN ACCORDANCE WITH STANDARD PLAN BASIC NO. S-500, AND SHALL HAVE RESISTANCE (NOT LESS THAN TWO-TENTHS OHMS) BETWEEN BATTERY AND TRACK, ADJUSTED TO SUIT LOCAL CONDITIONS.

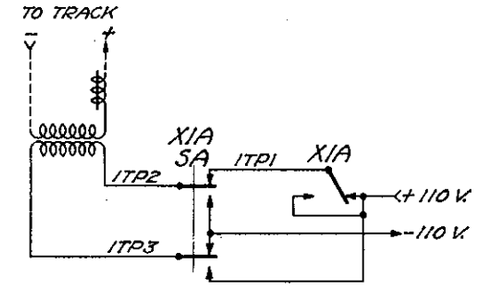

ARRANGEMENT OF CIRCUIT WHICH SHALL BE PROVIDED WHERE A.C. SLOW ACTING RELAYS OTHER THAN STYLE SV-30 OR SV-32 ARE USED. WHERE D.C. SLOW ACTING RELAYS ARE USED SEE NOTE 2.

SKETCH "A"

REVISIONS.

2-16-27 NOTES 1 & 2 AND SKETCH "A" ADDED.
APPROVED:-

REDRAWN FROM SHEET 1 AND 2 OF PLAN S-856, SH. 1 DATED 12-27-24, LAST REVISED 12-27-24, SHEET 2 DATED 10-7-21.

SHEET 1 OF 11

S-856

THE PENNSYLVANIA RAILROAD
STANDARD
LIGHTING CIRCUITS FOR
POSITION LIGHT DISTANT SIGNALS

OFFICE OF CHIEF SIGNAL ENGINEER,
PHILA., PA., FEB. 10, 1927

NOT TO SCALE

Approved
Chief Signal Engineer

Approved
Chief Engineer

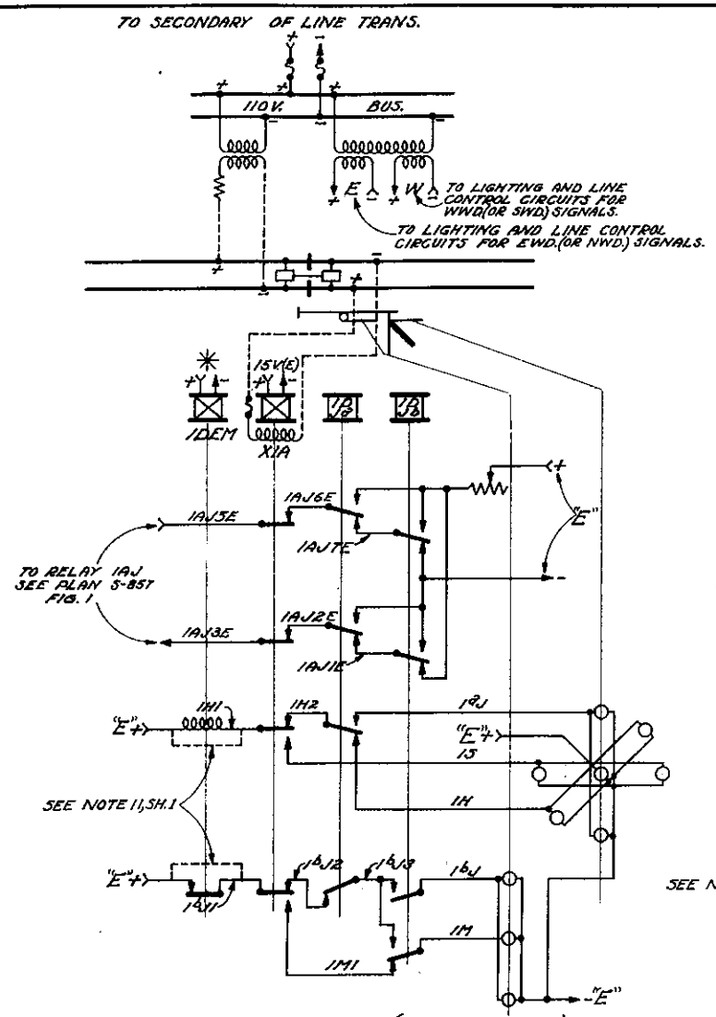

ELECTRIC ROAD (A.C. PROPULSION)
FIGURE 1.

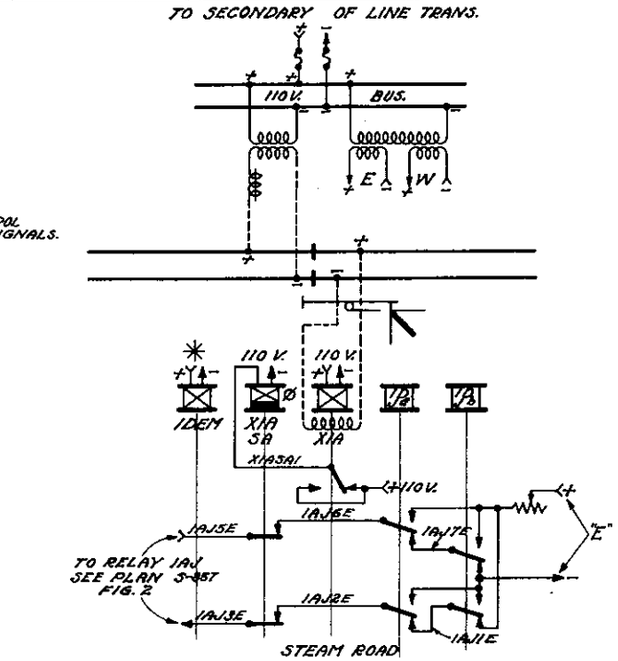

FIGURE 2.

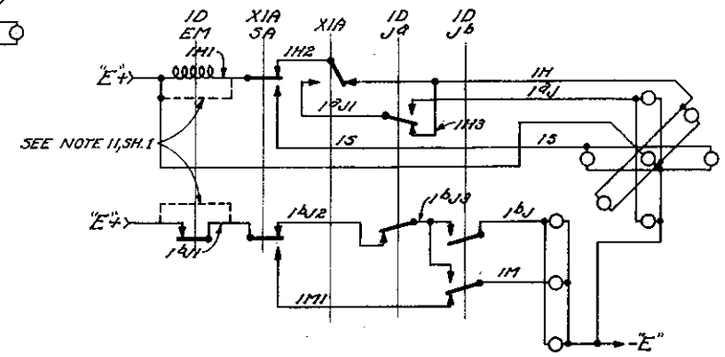

FOR FIGURES 2 & 3.

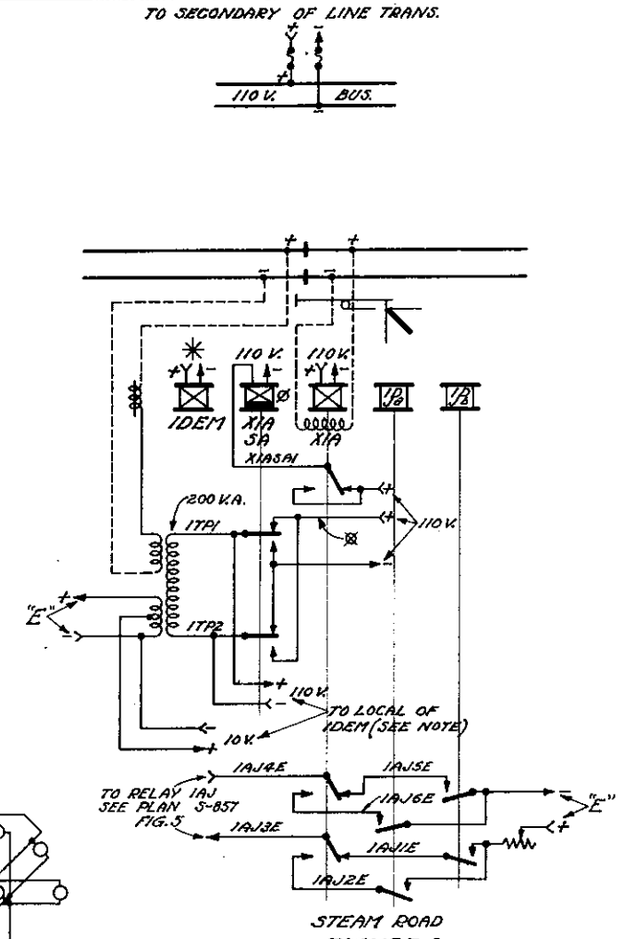

FIGURE 3.

THREE BLOCK INDICATION.

NOTE:-

✳ A. 10 V.-FOR STYLE T2LV14 RELAY.
110 V.-FOR MODEL 15 VANE RELAY.

B. WHERE A.C. SLOW ACTING RELAYS OTHER THAN SV-30 OR SV-32 ARE USED CIRCUITS MARKED ⊠ SHALL BE ARRANGED AS SHOWN IN SKETCH "A", SHEET NO. 1.

C. WHERE D.C. SLOW ACTING RELAYS ARE SUBSTITUTED FOR RELAYS MARKED Ø SEE NOTE 2, SHEET NO. 1.

FOR GENERAL NOTES SEE SHEET NO. 1.

REVISIONS.

2-16-27. FIG. 2 ADDED. SINGLE SECONDARY TRACK TRANS. AND SEPARATE LIGHTING TRANS. PROVIDED IN FIG. 3 AND POLE-CHANGING CIRC. IN FIG. 3 CHANGED.
APPROVED:- A.H. Rudd

FIG. 1 REDRAWN FROM SH. 3 AND FIG. 3 FROM SH. 4 OF PLAN S-856 DATED 10-7-21, LAST REVISED 11-9-23

SHEET 2 OF 11

S-856

THE PENNSYLVANIA RAILROAD
STANDARD
LIGHTING CIRCUITS FOR POSITION LIGHT DISTANT SIGNALS

OFFICE OF CHIEF SIGNAL ENGINEER,
PHILA., PA., FEB. 16, 1927

NOT TO SCALE

Approved A.H. Rudd
Chief Signal Engineer

Approved J. Pilliner
Chief Engineer

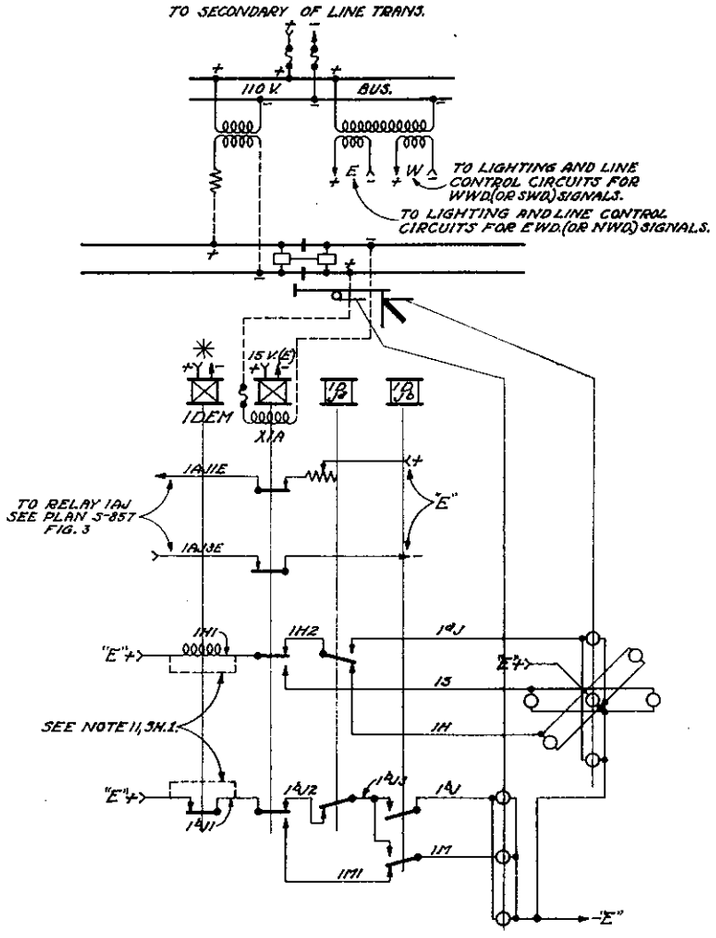

ELECTRIC ROAD (A.C. PROPULSION)
FIGURE 4.

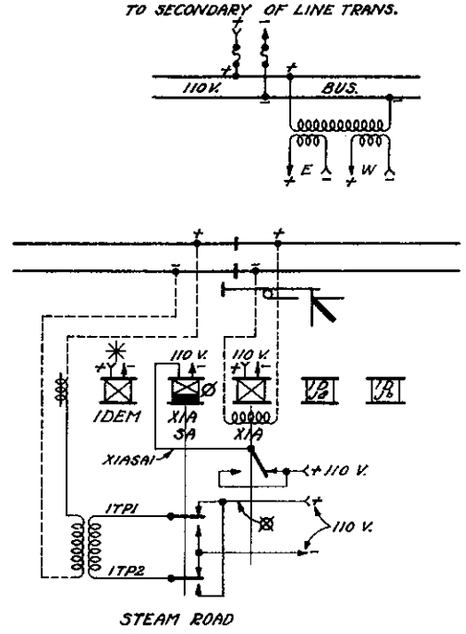

STEAM ROAD
FIGURE 5.

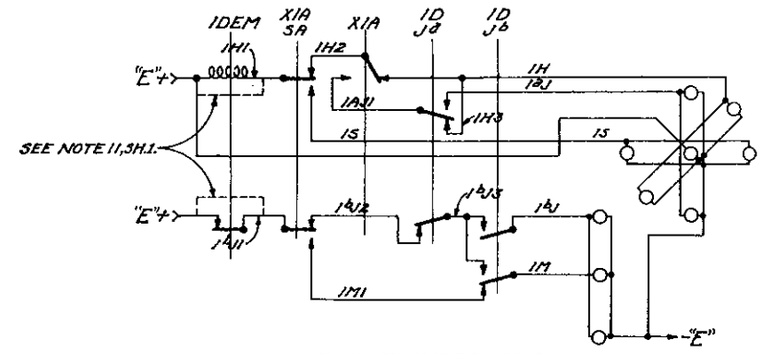

FOR FIGURES 5&6.

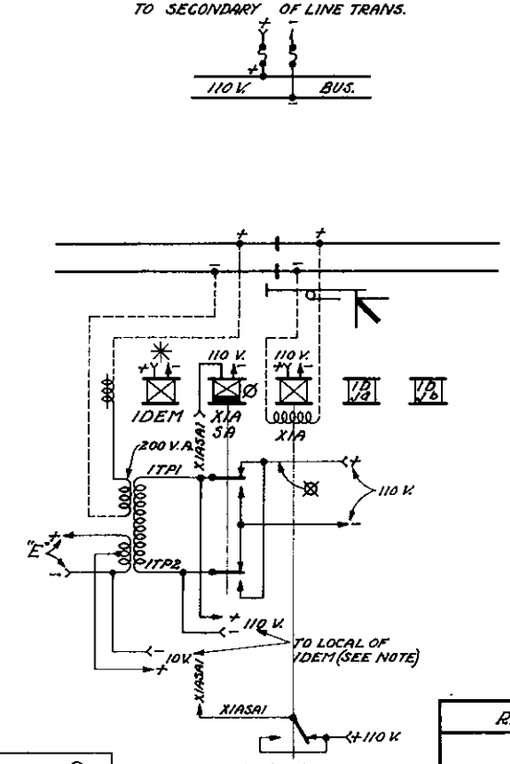

STEAM ROAD
FIGURE 6

TWO BLOCK INDICATION

NOTE:-

✳ A. 10 V.-FOR STYLE T2LV14 RELAY.
110 V.-FOR MODEL 15 VANE RELAY.

B. WHERE A.C. SLOW ACTING RELAYS OTHER THAN SV-30 OR SV-32 ARE USED CIRCUITS MARKED ⊠ SHALL BE ARRANGED AS SHOWN IN SKETCH "A" SHEET NO.1.

C. WHERE D.C. SLOW ACTING RELAYS ARE SUBSTITUTED FOR RELAYS MARKED Ø SEE NOTE 2, SHEET NO.1.

FOR GENERAL NOTES SEE SHEET NO.1.

REVISIONS.

2-16-27. FIG. 5 ADDED. SINGLE SECONDARY TRACK TRANS. AND SEPARATE LIGHTING TRANS. PROVIDED IN FIG. 4 AND POLE-CHANGING CIRC. IN FIG. 6 CHANGED.
APPROVED:-

FIG. 4 REDRAWN FROM SH. 5 AND FIG. 6 FROM SH. 6 OF PLAN S-856 DATED 10-7-21, LAST REVISED 11-9-23.

SHEET 3 OF 11

S-856

THE PENNSYLVANIA RAILROAD
STANDARD
LIGHTING CIRCUITS FOR
POSITION LIGHT DISTANT SIGNALS

OFFICE OF CHIEF SIGNAL ENGINEER,
PHILA., PA., FEB. 16, 1927

NOT TO SCALE

Approved
Chief Signal Engineer

Approved
Chief Engineer

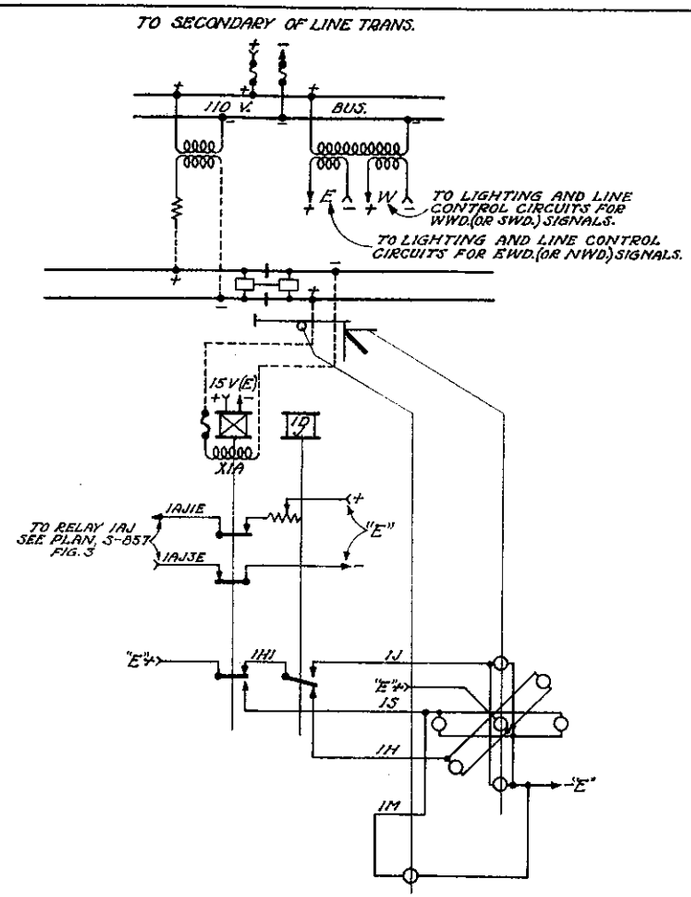

ELECTRIC ROAD (A.C. PROPULSION)
FIGURE 7.

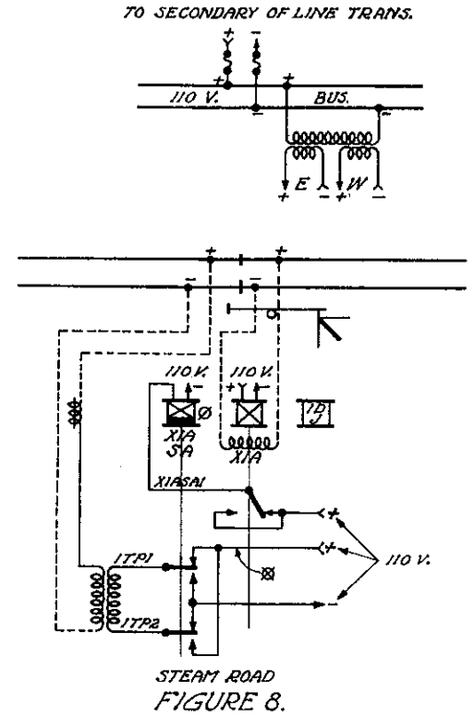

STEAM ROAD
FIGURE 8.

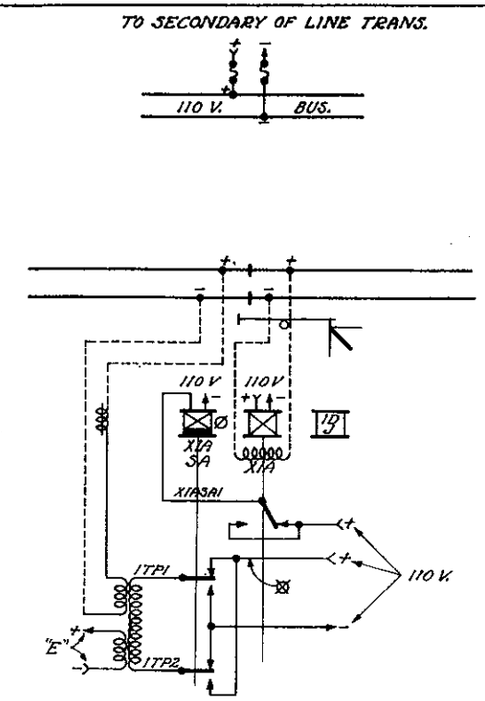

STEAM ROAD
FIGURE 9.

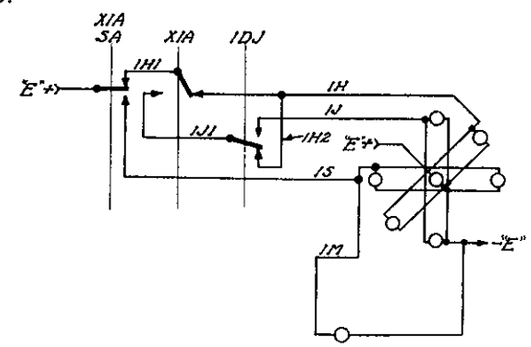

FOR FIGURES 8&9

NOTE:-
A. WHERE A.C. SLOW ACTING RELAYS OTHER THAN SV-30 OR SV-32 ARE USED CIRCUITS MARKED ⊠ SHALL BE ARRANGED AS SHOWN IN SKETCH "A", SHEET NO.1.
B. WHERE D.C. SLOW ACTING RELAYS ARE SUBSTITUTED FOR RELAYS MARKED Ø SEE NOTE 2, SHEET NO.1.

FOR GENERAL NOTES SEE SHEET NO.1.

REVISIONS.

2-16-27. FIG. 8 ADDED. SINGLE SECONDARY TRACK AND SEPARATE LIGHTING TRANS. PROVIDED IN FIG. 7 AND POLE CHANGING CIRC. IN FIG. 9 CHANGED.
APPROVED:- A.H. Rudd

FIG. 7 REDRAWN FROM SH. 7 AND FIG. 9 FROM SH. 8 OF PLAN S-856 DATED 10-7-21 LAST REVISED 3-27-22.

SHEET 4 OF 11

S-856

THE PENNSYLVANIA RAILROAD
STANDARD
LIGHTING CIRCUITS FOR
POSITION LIGHT DISTANT SIGNALS

OFFICE OF CHIEF SIGNAL ENGINEER
PHILA., PA., FEB. 16, 1927

NOT TO SCALE

Approved
A.H. Rudd
Chief Signal Engineer

Approved
J. Pilling
Chief

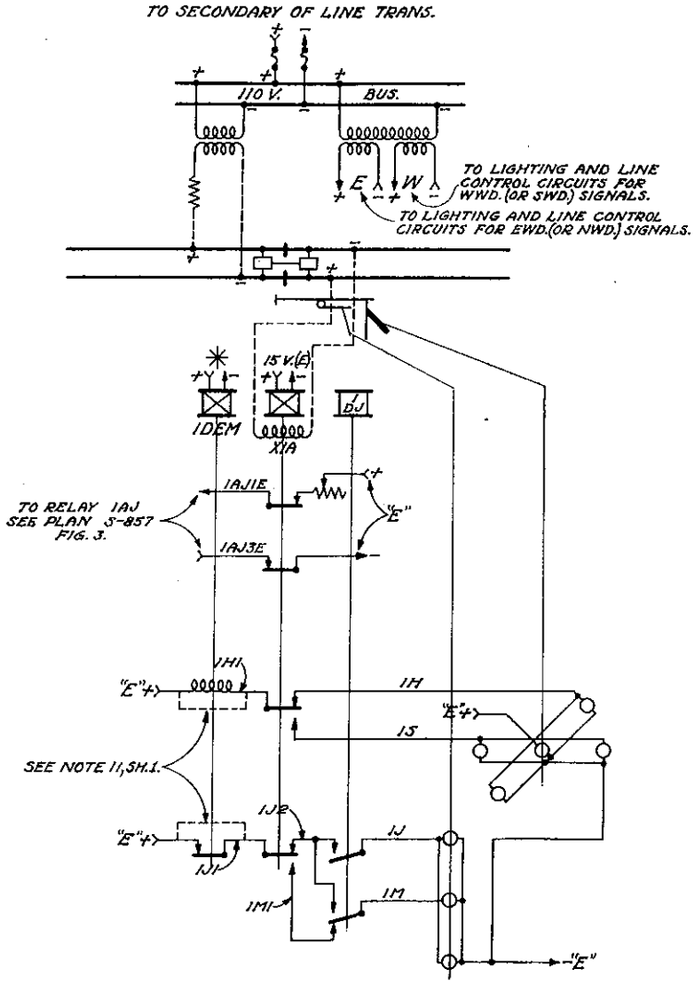

ELECTRIC ROAD (A. C. PROPULSION)
FIGURE 10.

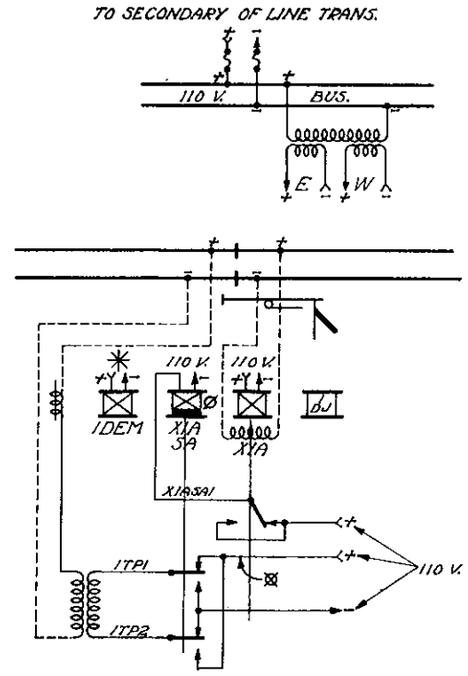

STEAM ROAD
FIGURE 11.

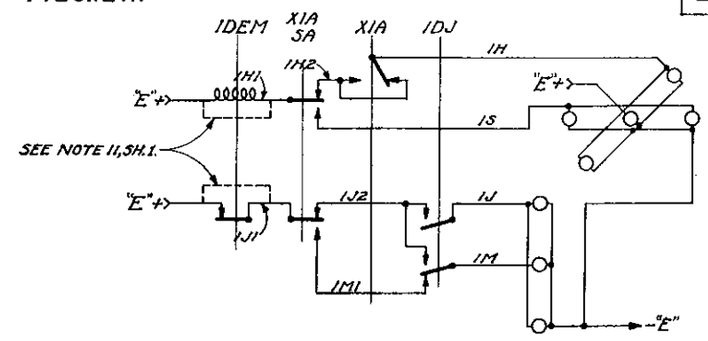

FOR FIGURES 11 & 12.

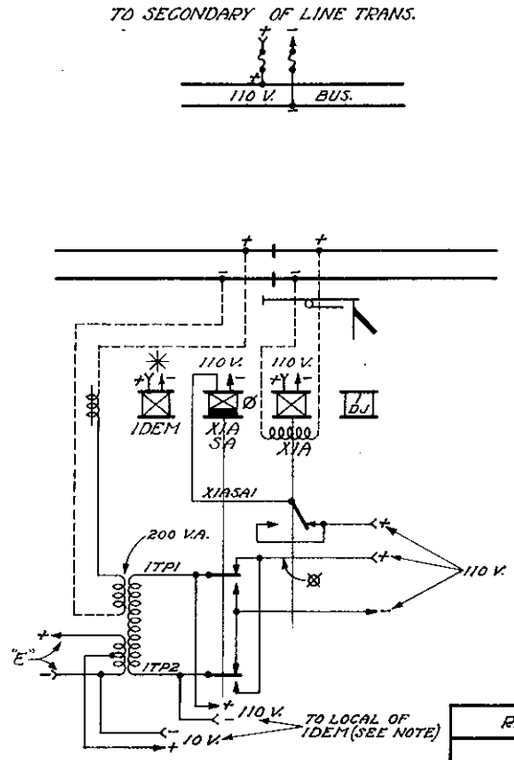

STEAM ROAD.
FIGURE 12.

NOTE:-

✳ A. 10 V. FOR STYLE T2LV14 RELAY.
110 V. FOR MODEL 15 VANE RELAY.

B. WHERE A.C. SLOW ACTING RELAYS OTHER THAN SV-30 OR SV-32 ARE USED CIRCUITS MARKED ⊠ SHALL BE ARRANGED AS SHOWN IN SKETCH "A", SHEET NO. 1

C. WHERE D.C. SLOW ACTING RELAYS ARE SUBSTITUTED FOR RELAYS MARKED Ø SEE NOTE 2, SHEET NO. 1.

FOR GENERAL NOTES SEE SHEET NO. 1.

REVISIONS.

2-16-27. FIG. 11 ADDED. SINGLE SECONDARY TRACK TRANS. AND SEPARATE LIGHTING TRANS. PROVIDED IN FIG. 10 AND POLE-CHANGING CIRC. IN FIG. 12 CHANGED.
APPROVED:- A.H. Rudd

FIG. 10 REDRAWN FROM SH. 9 AND FIG. 12 FROM SH. 10 OF PLAN S-856 DATED 18-7-21, LAST REVISED 11-9-23.

SHEET 5 OF 11

S-856

THE PENNSYLVANIA RAILROAD
STANDARD
LIGHTING CIRCUITS FOR
POSITION LIGHT DISTANT SIGNALS

OFFICE OF CHIEF SIGNAL ENGINEER,
PHILA., PA., FEB. 16, 1927

NOT TO SCALE

Approved A.H. Rudd
Chief Signal Engineer

Approved
Chief Engineer

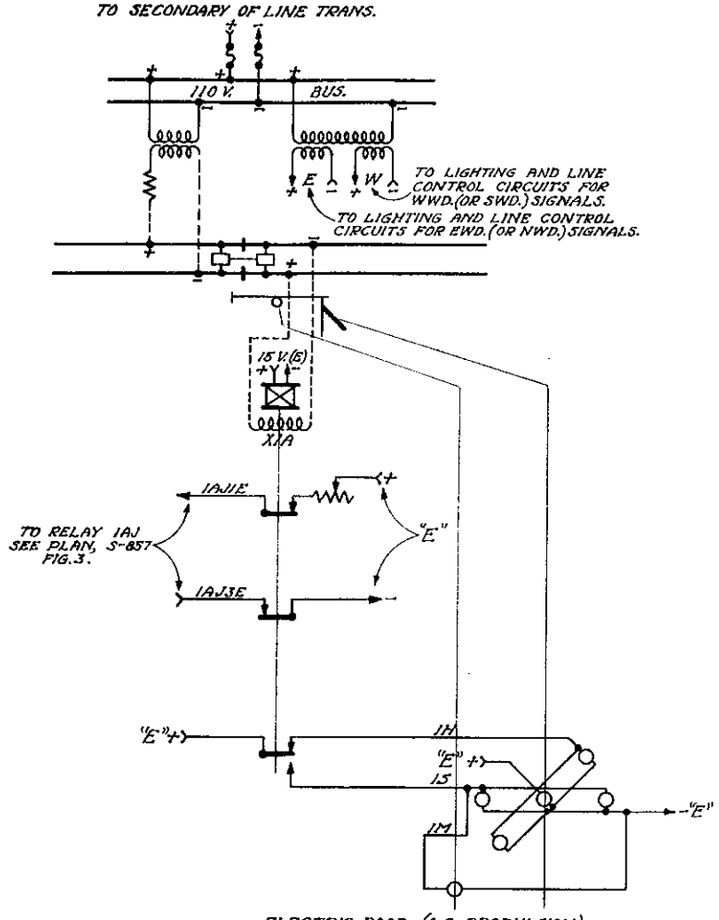

ELECTRIC ROAD (A.C. PROPULSION.)
FIGURE 13.

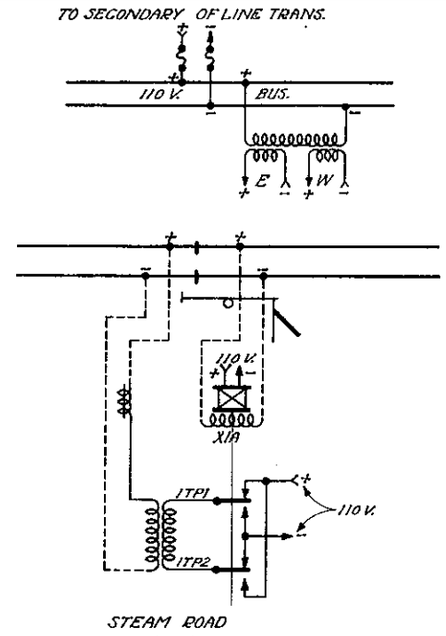

STEAM ROAD
FIGURE 14.

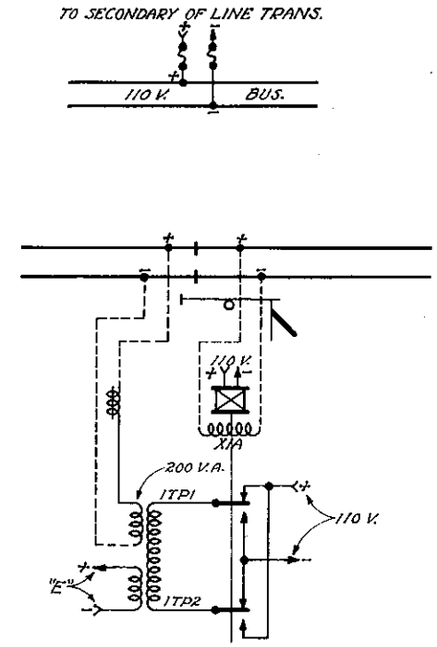

STEAM ROAD.
FIGURE 15.

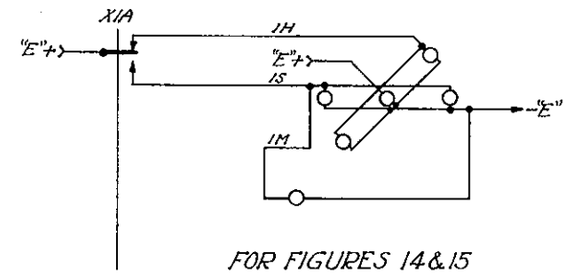

FOR FIGURES 14 & 15

FOR GENERAL NOTES SEE SHEET NO. 1.

REVISIONS.

2-16-27. FIG. 14 ADDED. SINGLE SECONDARY TRACK TRANS. AND SEPARATE LIGHTING TRANS. PROVIDED IN FIG. 13 AND POLE-CHANGING CIRC. IN FIG. 15 CHANGED.
APPROVED- A H Rudd

FIG. 13 REDRAWN FROM SH. 11 AND FIG. 15 FROM SH. 12 OF PLAN S-856 DATED 10-7-21, LAST REVISED 3-27-22.

SHEET 6 OF 11

S-856

THE PENNSYLVANIA RAILROAD
STANDARD
LIGHTING CIRCUITS FOR
POSITION LIGHT DISTANT SIGNALS

OFFICE OF CHIEF SIGNAL ENGINEER,
PHILA., PA., FEB. 16, 1927

NOT TO SCALE

Approved A H Rudd
Chief Signal Engineer

Approved
Chief Engineer

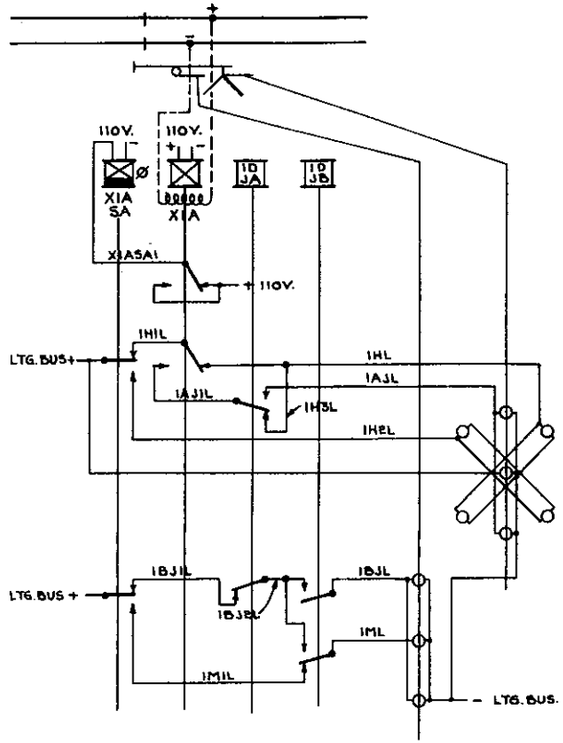

A.C. TRACK - A.C. LIGHTING
FIGURE 16. (NOTE B)

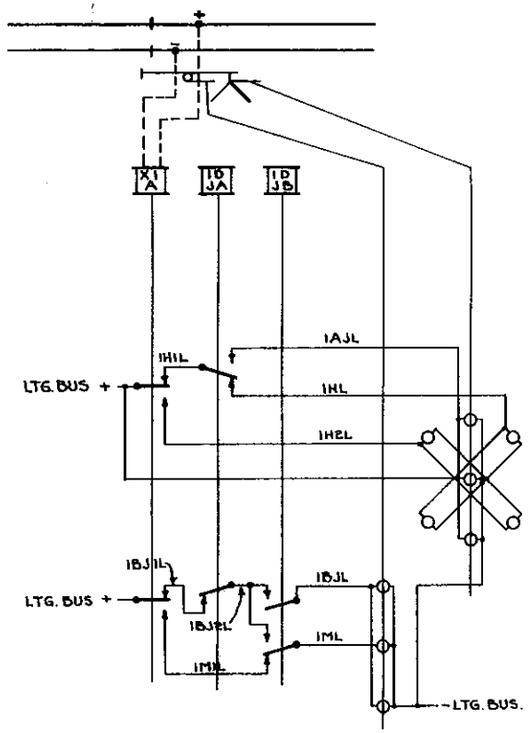

D.C. TRACK - A.C. LIGHTING.
FIGURE 17. (NOTE B)

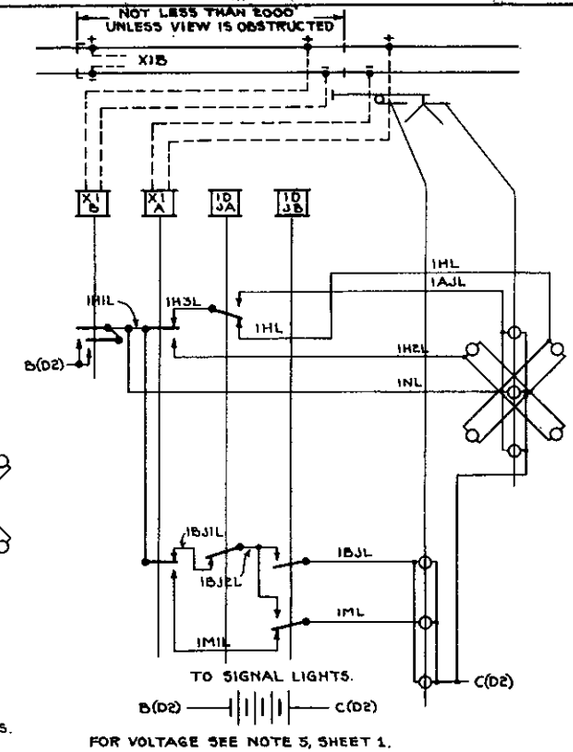

FOR VOLTAGE SEE NOTE 5, SHEET 1.

D.C. TRACK - APPROACH LIGHTING
FIGURE 18. (NOTE B)

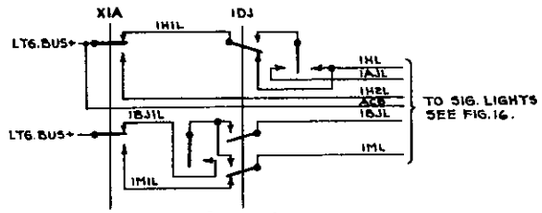

FIGURE 16A. (NOTE C)

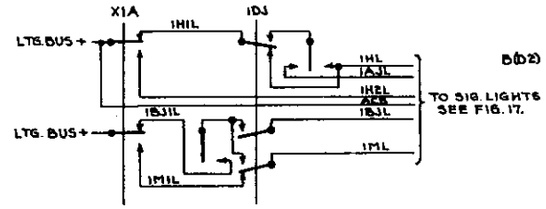

FIGURE 17A. (NOTE C)

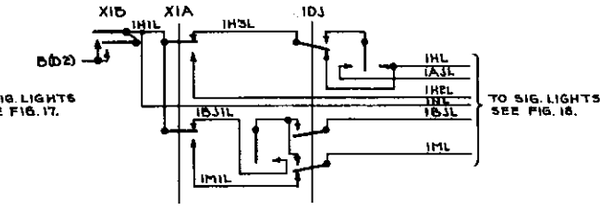

FIGURE 18A. (NOTE C)

NOTE:-
A. WHERE D.C. SLOW ACTING RELAYS ARE SUBSTITUTED FOR RELAYS MARKED Ø SEE NOTE 2, SHEET NO. 1.
B. WHERE POLARIZED TRACK AND NEUTRAL LINE CIRCUITS ARE USED SEE FIGS. 16, 17 & 18.
C. WHERE NEUTRAL TRACK AND POLARIZED LINE CIRCUITS ARE USED SEE FIGS. 16A, 17A & 18A.

REVISIONS.

3-2-33. LIGHT-OUT RELAYS REMOVED & FIGS. 16A, 17A & 18A ADDED. APPROVED: A.H. Rudd

REDRAWN FROM PLAN S-656, SH. 7. DATED 2-16-27.

SHEET 7 OF 11

S-856

THE PENNSYLVANIA RAILROAD
STANDARD
LIGHTING CIRCUITS FOR
POSITION LIGHT DISTANT SIGNALS

OFFICE OF CHIEF SIGNAL ENGINEER.
PHILA. PA., MARCH 2, 1933.

NOT TO SCALE

Approved: A.H. Rudd
Chief Signal Engineer.

Approved: Chief Engineer.

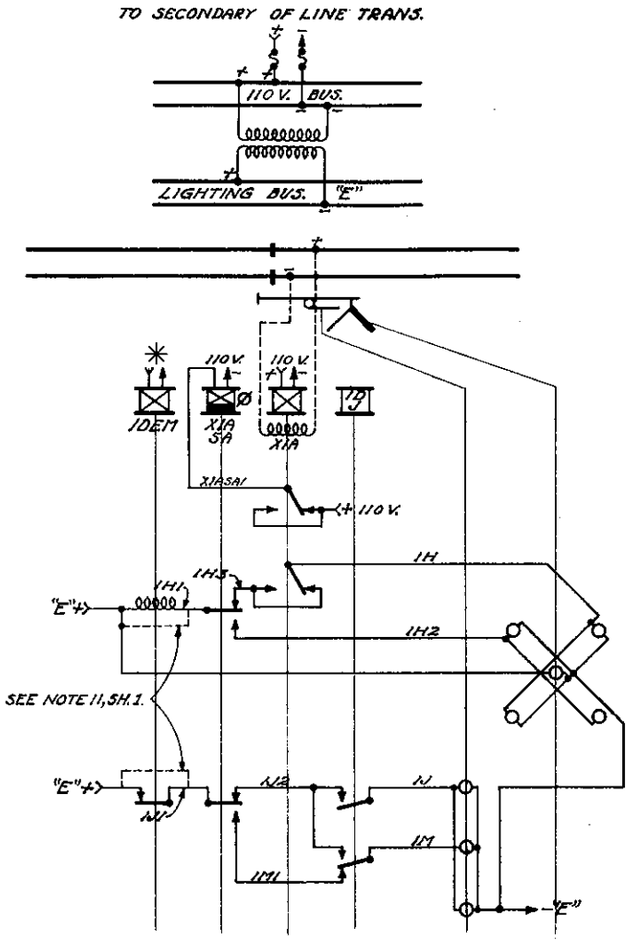

A.C. TRACK - A.C. LIGHTING.
FIGURE 22.

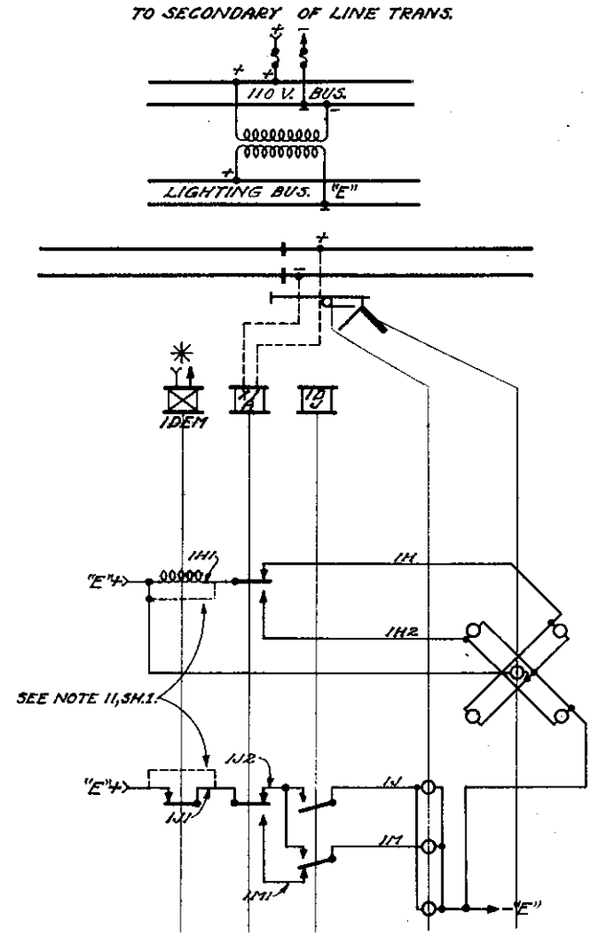

D.C. TRACK - A.C. LIGHTING.
FIGURE 23.

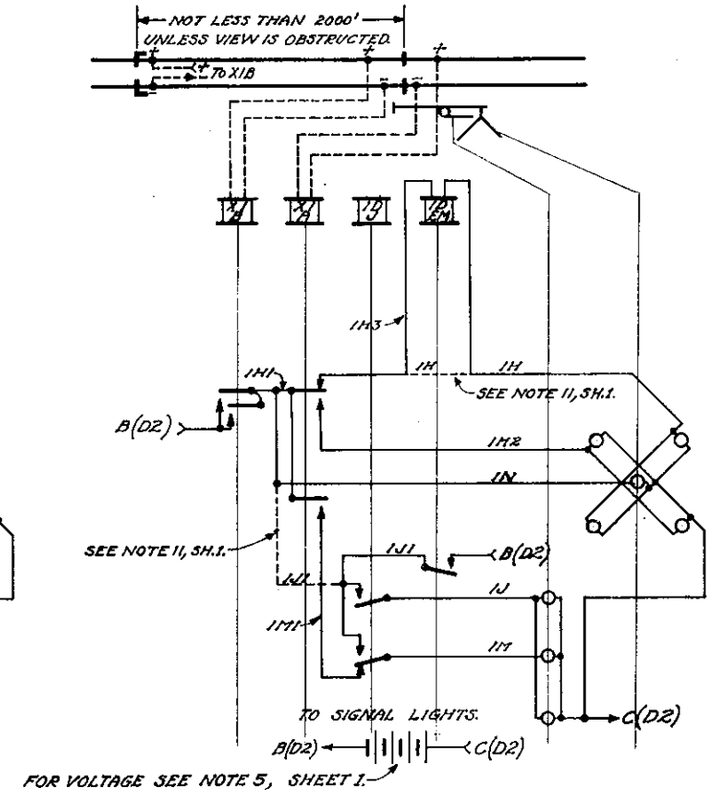

FOR VOLTAGE SEE NOTE 5, SHEET 1.

D.C. TRACK-APPROACH LIGHTING.
FIGURE 24

NOTE:-

✳ A. 10 V.-FOR STYLE T2LV14 RELAY.
110 V.-FOR MODEL 15 VANE RELAY.

B. WHERE D.C. SLOW ACTING RELAYS ARE SUBSTITUTED FOR RELAYS MARKED Ø SEE NOTE 2, SHEET NO.1.

FOR GENERAL NOTES SEE SHEET NO 1.

REVISIONS.

FIG.22 REDRAWN FROM SH. 19, FIG.23 FROM SH.20 AND FIG.24 FROM SH.21 OF PL.NO. S-856 DATED 10-7-21; SHS.19 & 20 LAST REVISED 11-9-23 SH.21 LAST REVISED 12-27-24.

SHEET 9 OF 11

S-856

THE PENNSYLVANIA RAILROAD
STANDARD
LIGHTING CIRCUITS FOR
POSITION LIGHT DISTANT SIGNALS

OFFICE OF CHIEF SIGNAL ENGINEER,
PHILA., PA., FEB 18, 1927

NOT TO SCALE

Approved
Chief Signal Engineer

Approved
Chief Engineer

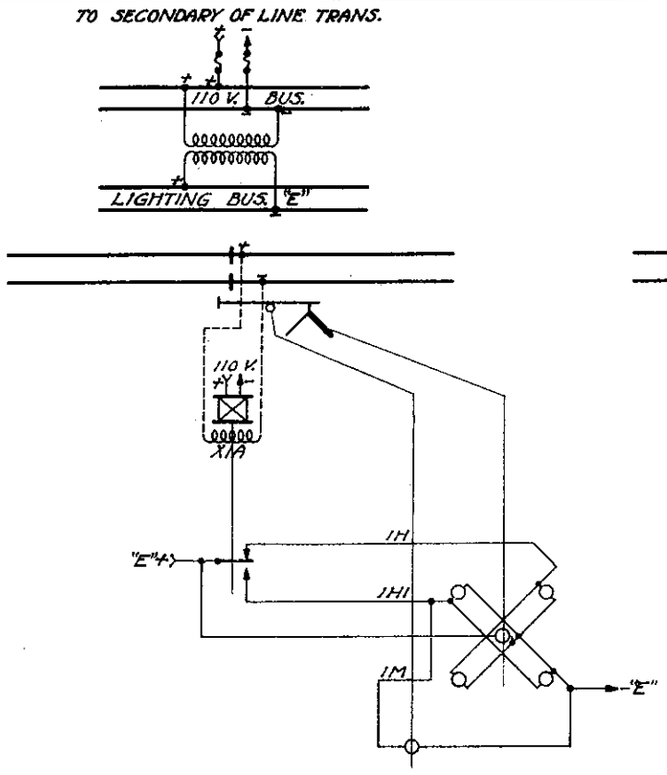

A.C. TRACK - A.C. LIGHTING.
FIGURE 25.

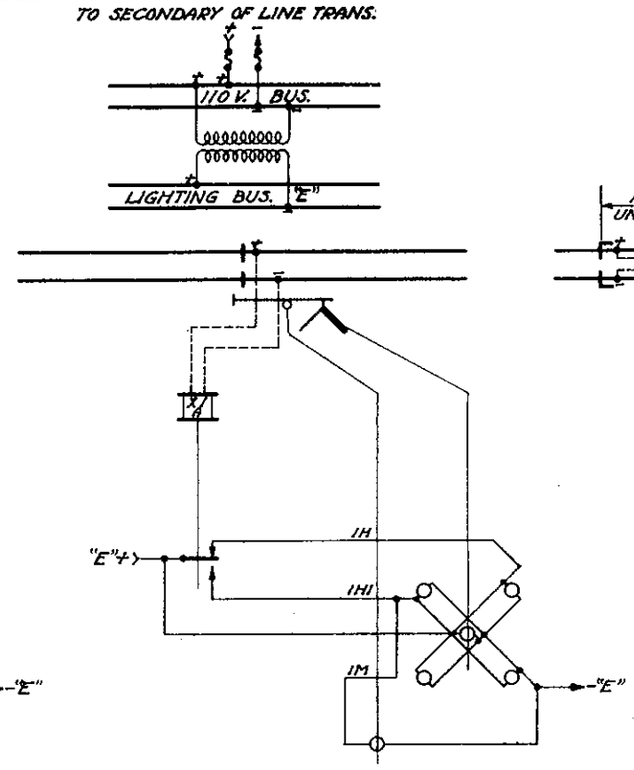

D.C. TRACK - A.C. LIGHTING.
FIGURE 26.

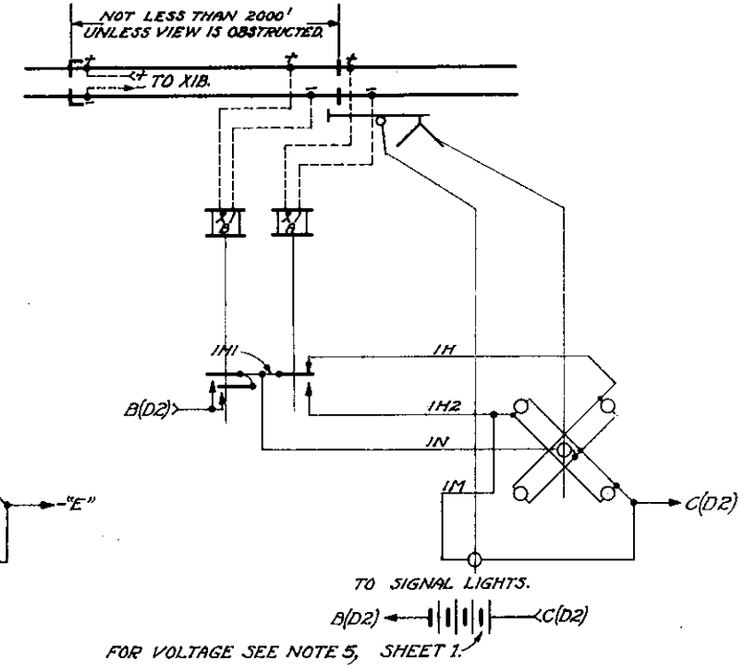

D.C. TRACK - APPROACH LIGHTING.
FIGURE 27.

FOR GENERAL NOTES SEE SHEET NO. 1.

REVISIONS.

FIG. 25 REDRAWN FROM SH. 22, FIG. 26 FROM SH. 23 AND FIG. 27 FROM SH. 24 OF PLAN S-856 DATED 10-7-21, LAST REVISED 3-27-22.

SHEET 10 OF 11

S-856

THE PENNSYLVANIA RAILROAD
STANDARD
LIGHTING CIRCUITS FOR
POSITION LIGHT DISTANT SIGNALS

OFFICE OF CHIEF SIGNAL ENGINEER,
PHILA., PA., FEB. 15, 1927

NOT TO SCALE

Approved
Chief Signal Engineer

Approved
Chief Engineer

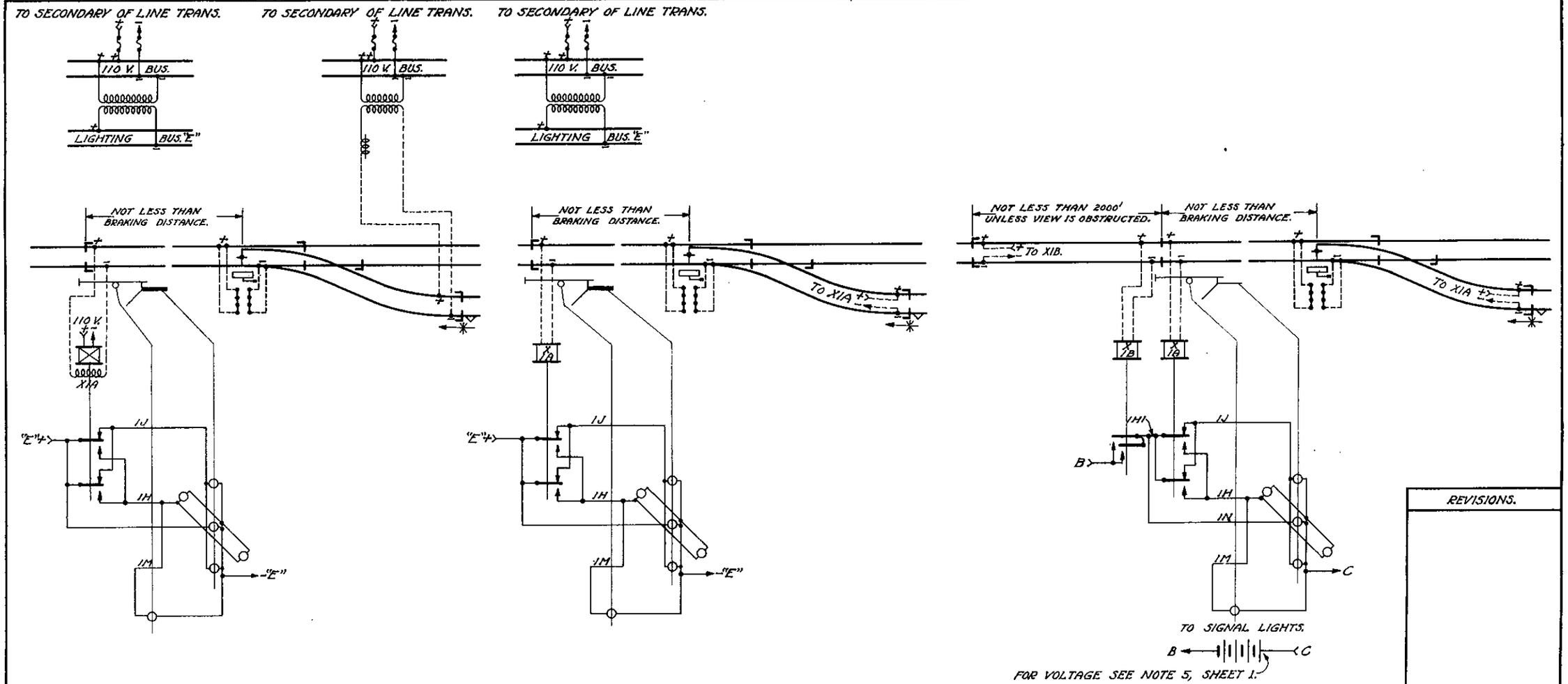

A. C. TRACK – A. C. LIGHTING.
FIGURE 28.

D. C. TRACK – A. C. LIGHTING.
FIGURE 29.

FOR VOLTAGE SEE NOTE 5, SHEET 1.

D. C. TRACK – APPROACH LIGHTING.
FIGURE 30.

FOR GENERAL NOTES SEE SHEET NO. 1.

REVISIONS.

FIG. 28 REDRAWN FROM SH. 25, FIG. 29 FROM SH. 26 AND FIG. 30 FROM SH. 27 OF PLAN S-856 DATED 10-7-21, LAST REVISED 3-27-22.

SHEET 11 OF 11

S-856

THE PENNSYLVANIA RAILROAD
STANDARD
LIGHTING CIRCUITS FOR POSITION LIGHT DISTANT SIGNALS

OFFICE OF CHIEF SIGNAL ENGINEER,
PHILA., PA., FEB. 18, 1927

NOT TO SCALE

Approved
Chief Signal Engineer

Approved
Chief Engineer

NOTE:-

1.- FOR ARRANGEMENT OF TERMINALS IN TERMINAL BOX SEE STANDARD PLAN NO. S-858.

2.- EACH MAST SHALL HAVE A SEPARATE POSITIVE AND A SEPARATE NEGATIVE WIRE.

3.- LIGHTING CIRCUITS SHALL BE SO ADJUSTED AS TO HAVE UNIFORM VOLTAGE AT THE LAMPS. THE VOLTAGE SHALL BE BETWEEN THE FOLLOWING LIMITS:- MAXIMUM-11.5 VOLTS, MINIMUM-11.0 VOLTS, KEEPING IT AS NEAR THE MAXIMUM AS PRACTICABLE.

4.- LAMPS SHALL BE IN ACCORDANCE WITH STANDARD PLAN BASIC NO. S-483.

5.- ALL NON-INTERLOCKED CROSSOVERS, TURNOUTS AND DERAILS IN AUTOMATIC SIGNAL TERRITORY SHALL BE IN ACCORDANCE WITH STANDARD PLANS BASIC NOS. S-228 TO S-233 INCLUSIVE AND SHALL BE INSULATED AND BONDED IN ACCORDANCE WITH STANDARD PLAN S-803.

6.- SIGNAL WIRES AND CONTROL RELAYS HAVE BEEN NUMBERED FROM ARBITRARY TRACK NUMBER AND CORRECT NUMBER FOR THE TRACK WHICH SIGNAL GOVERNS SHALL BE SUBSTITUTED.

7.- WHERE NO "LIGHT-OUT" (IEM) RELAY IS USED CIRCUITS SHALL BE ARRANGED AS SHOWN BY DOTTED LINES.

8.- WHERE THE TRACK SECTION APPROACHING AN AUTOMATIC SIGNAL IS NOT POLARIZED, THE POLARIZED TRACK FEED FOR SUCH SECTION SHALL BE OMITTED AND THE TRACK TRANSFORMER CONNECTED DIRECT TO THE 110V. BUS. SEE FIGURES 4, 5 AND 6.

9.- WHERE DIRECTION OF TRAFFIC IS NORTH AND SOUTH SUBSTITUTE THE LETTER "N" FOR "E" AND "S" FOR "W" IN THE LINE CONTROL CIRCUITS.

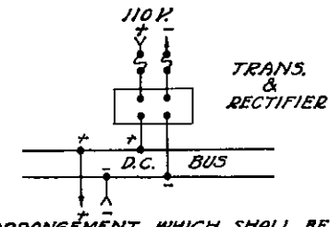

ARRANGEMENT WHICH SHALL BE USED FOR SUPPLYING ENERGY TO D.C. APPARATUS.

SKETCH "A"

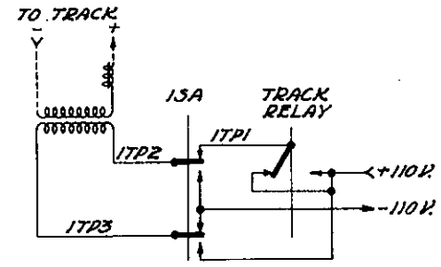

ARRANGEMENT OF CIRCUIT WHICH SHALL BE PROVIDED WHERE A.C. SLOW ACTING RELAYS OTHER THAN STYLE S.V. 30 OR S.V. 32 ARE USED.

WHERE A D.C. SLOW ACTING RELAY IS SUBSTITUTED FOR THE A.C. SLOW ACTING RELAY IT SHALL HAVE A RETARDED PICK-UP AND A RETARDED DROP-AWAY OF NOT LESS THAN 0.5 SECONDS AND POLE-CHANGING CIRCUITS SHALL BE ARRANGED SIMILAR TO THOSE WHERE SV-30 OR SV-32 RELAYS ARE USED.

SKETCH "B"

REVISIONS

2-14-27. SKETCHES "A" & "B" ADDED.
APPROVED:- [signature]

REDRAWN FROM SH. 1 OF PLAN S-857 DATED 10-18-21. LAST REVISED 11-3-23.

SHEET 1 OF 4

S-857

THE PENNSYLVANIA RAILROAD
STANDARD
CIRCUITS FOR POSITION LIGHT AUTOMATIC SIGNALS

OFFICE OF CHIEF SIGNAL ENGINEER, PHILA., PA., FEB. 14, 1927

NOT TO SCALE

Approved [signature] Chief Signal Engineer

Approved [signature] Chief Engineer

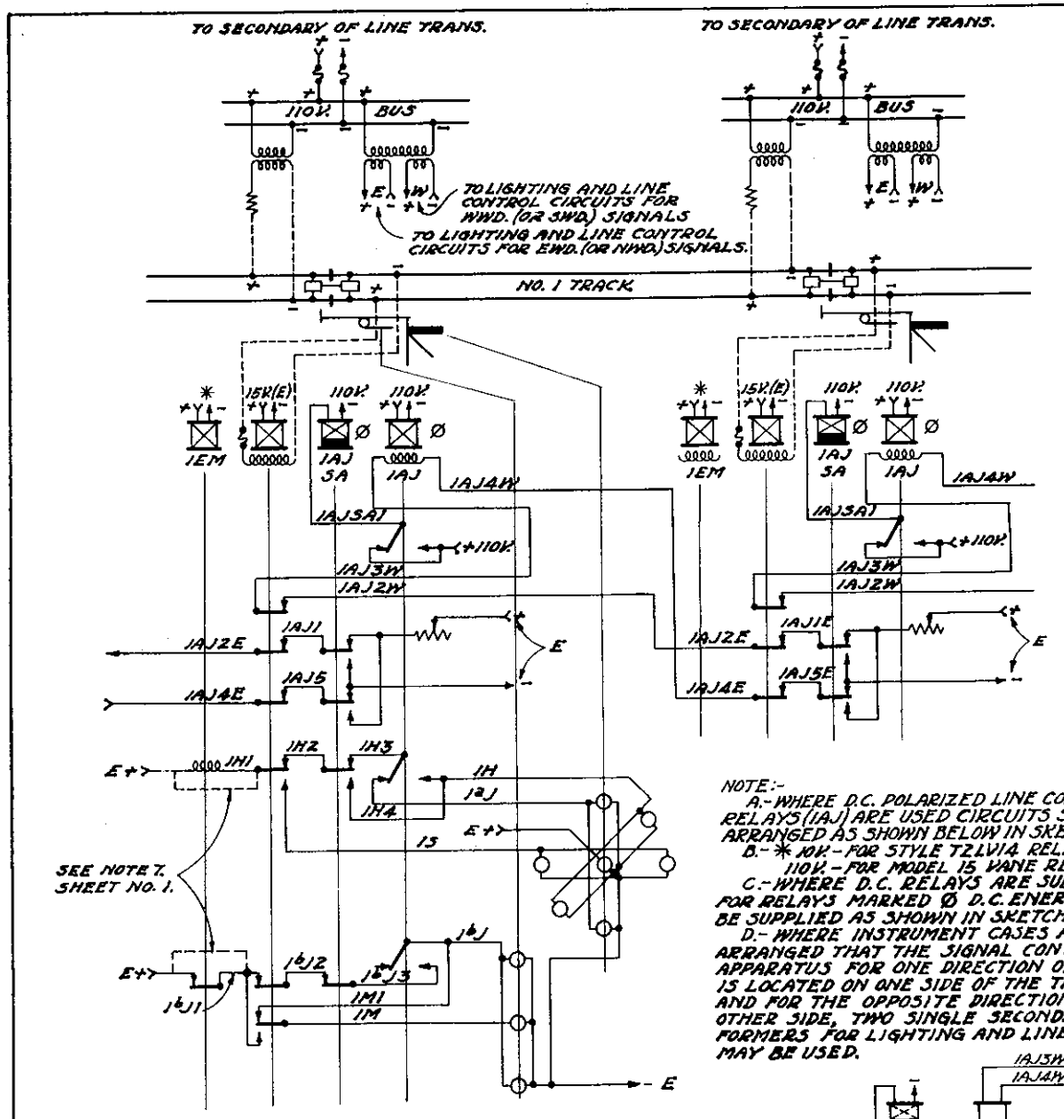

ELECTRIC ROAD. (A.C. PROPULSION)
FIGURE 1.

NOTE:-
A.- WHERE D.C. POLARIZED LINE CONTROL RELAYS (1AJ) ARE USED CIRCUITS SHALL BE ARRANGED AS SHOWN BELOW IN SKETCH "C."
B.- * 10V.- FOR STYLE TZLV1A RELAY.
110V.- FOR MODEL 15 VANE RELAY.
C.- WHERE D.C. RELAYS ARE SUBSTITUTED FOR RELAYS MARKED Ø D.C. ENERGY SHALL BE SUPPLIED AS SHOWN IN SKETCH "A", SHEET 1.
D.- WHERE INSTRUMENT CASES ARE SO ARRANGED THAT THE SIGNAL CONTROLLING APPARATUS FOR ONE DIRECTION OF TRAFFIC IS LOCATED ON ONE SIDE OF THE TRACKS AND FOR THE OPPOSITE DIRECTION ON THE OTHER SIDE, TWO SINGLE SECONDARY TRANSFORMERS FOR LIGHTING AND LINE CIRCUITS MAY BE USED.

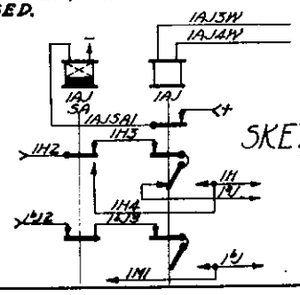

SKETCH "C"

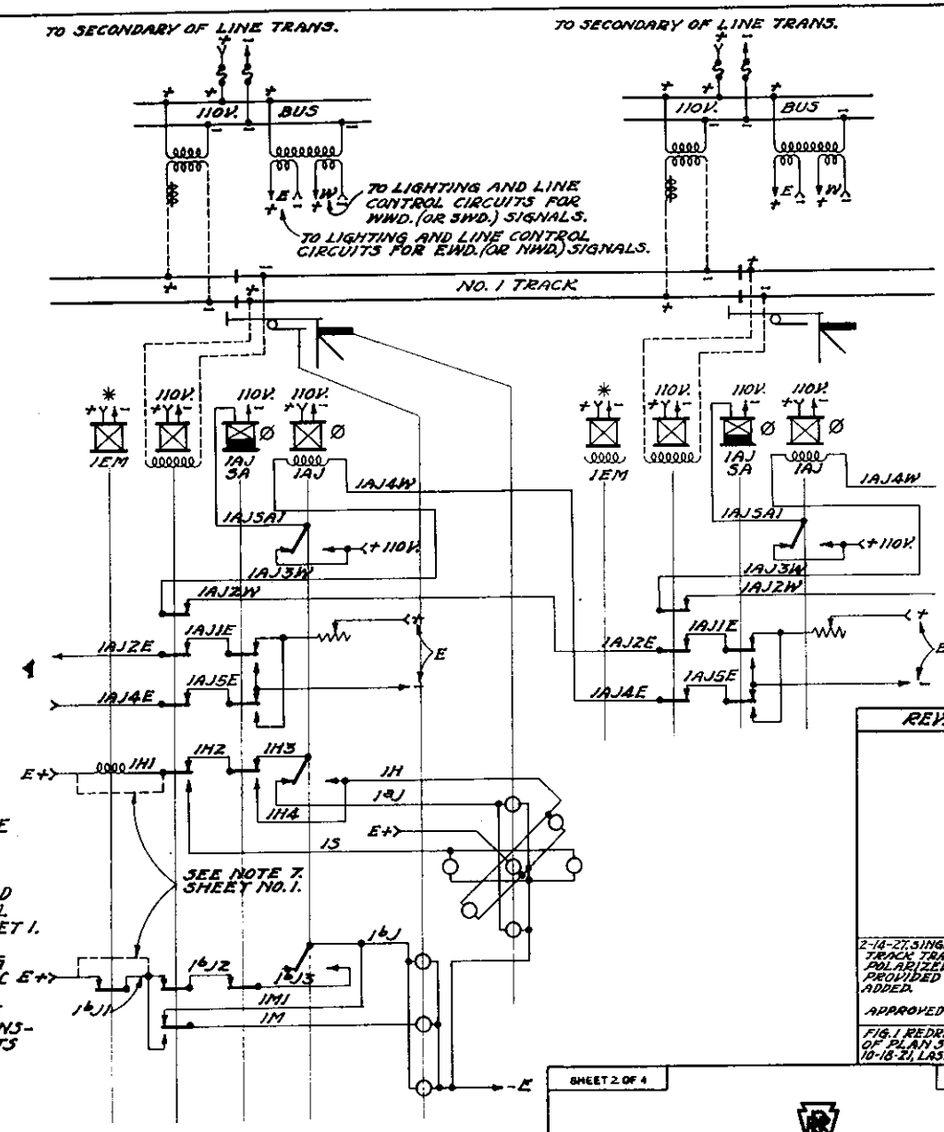

STEAM ROAD
FIGURE 2.

FOR GENERAL NOTES SEE SHEET NO. 1.

REVISIONS.
2-14-27. SINGLE SECONDARY TRACK TRANSFORMERS AND POLARIZED LINE CIRCUIT PROVIDED IN FIG. 1. FIG. 2 ADDED. APPROVED:-
FIG. 1 REDRAWN FROM SH. 2. OF PLAN S-857, DATED 10-18-21, LAST REVISED 11-9-23.

SHEET 2 OF 4

S-857

THE PENNSYLVANIA RAILROAD
STANDARD
CIRCUITS FOR POSITION LIGHT AUTOMATIC SIGNALS

OFFICE OF CHIEF SIGNAL ENGINEER, PHILA., PA., FEB. 14, 1927

NOT TO SCALE

Approved: Chief Signal Engineer

Approved: Chief Engineer

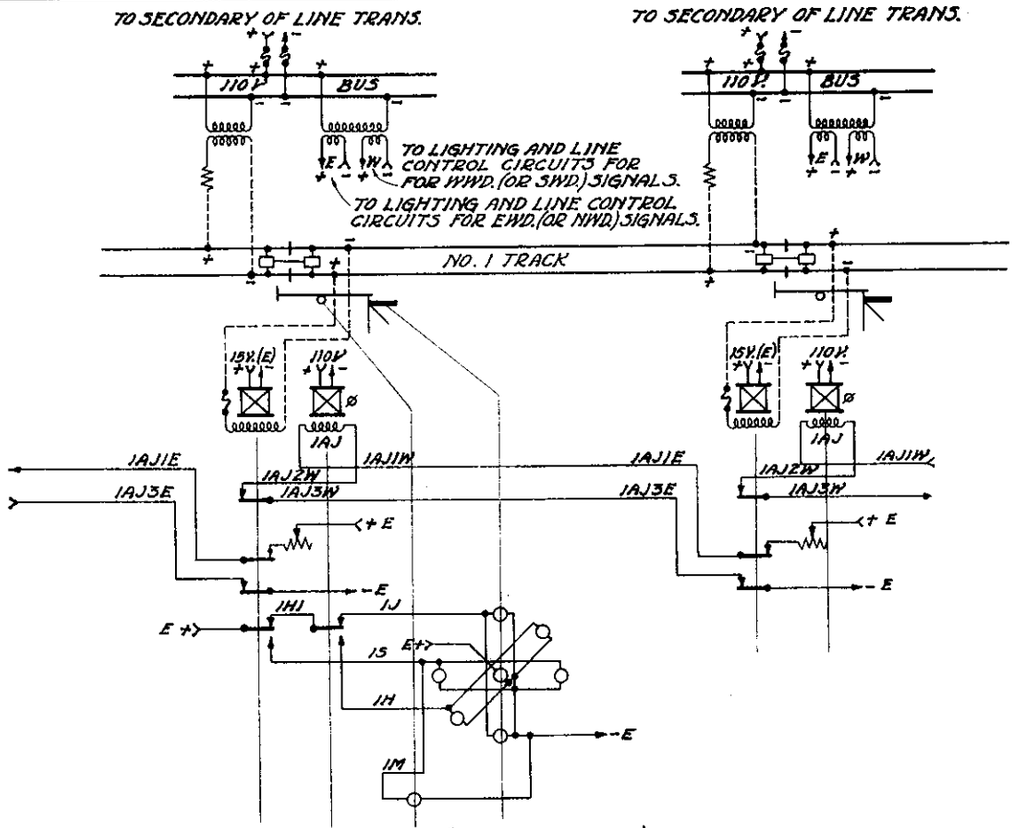

ELECTRIC ROAD (A.C. PROPULSION)
FIGURE 3.

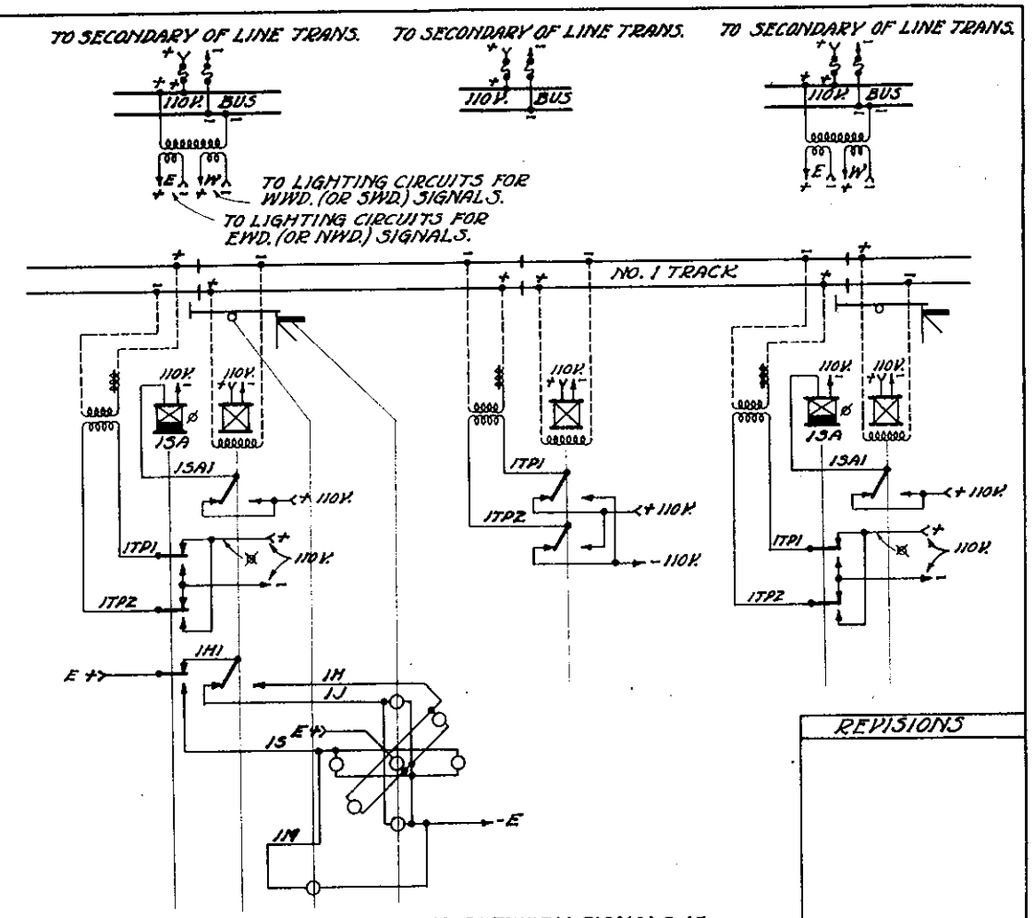

WHERE DISTANCE OR CONDITIONS BETWEEN SIGNALS IS SUCH THAT A SINGLE TRACK CIRCUIT MAY BE MAINTAINED OMIT CUT-SECTION.

STEAM ROAD
FIGURE 4.

NOTE:-

A- WHERE INSTRUMENT CASES ARE SO ARRANGED THAT THE SIGNAL CONTROLLING APPARATUS FOR ONE DIRECTION OF TRAFFIC IS LOCATED ON ONE SIDE OF THE TRACKS AND FOR THE OPPOSITE DIRECTION ON THE OTHER SIDE, TWO SINGLE SECONDARY TRANSFORMERS FOR LIGHTING AND LINE CIRCUITS MAY BE USED.

B- WHERE D.C. RELAYS ARE SUBSTITUTED FOR RELAYS MARKED Ø D.C. ENERGY SHALL BE SUPPLIED AS SHOWN IN SKETCH 'A', SHEET NO. 1.

C- WHERE A.C. SLOW ACTING RELAYS OTHER THAN SV-30 OR SV-32 ARE USED CIRCUITS MARKED ⊠ SHALL BE ARRANGED AS SHOWN IN SKETCH 'B', SHEET NO. 1.

FOR GENERAL NOTES SEE SHEET NO. 1.

REVISIONS

2-14-27 SINGLE SECONDARY TRACK TRANSFORMERS PROVIDED IN FIG. 3. FIG. 4 ADDED.
APPROVED:- A.H. Rudd

FIG. 3 REDRAWN FROM SH. 4. OF PLAN S-857 DATED 12-10-21, LAST REVISED 3-27-22.

SHEET 3 OF 4

S-857

THE PENNSYLVANIA RAILROAD
STANDARD
CIRCUITS FOR POSITION LIGHT AUTOMATIC SIGNALS

OFFICE OF CHIEF SIGNAL ENGINEER,
PHILA., PA., FEB. 14, 1927

NOT TO SCALE

Approved A.H. Rudd
Chief Signal Engineer

Approved
Chief Engineer

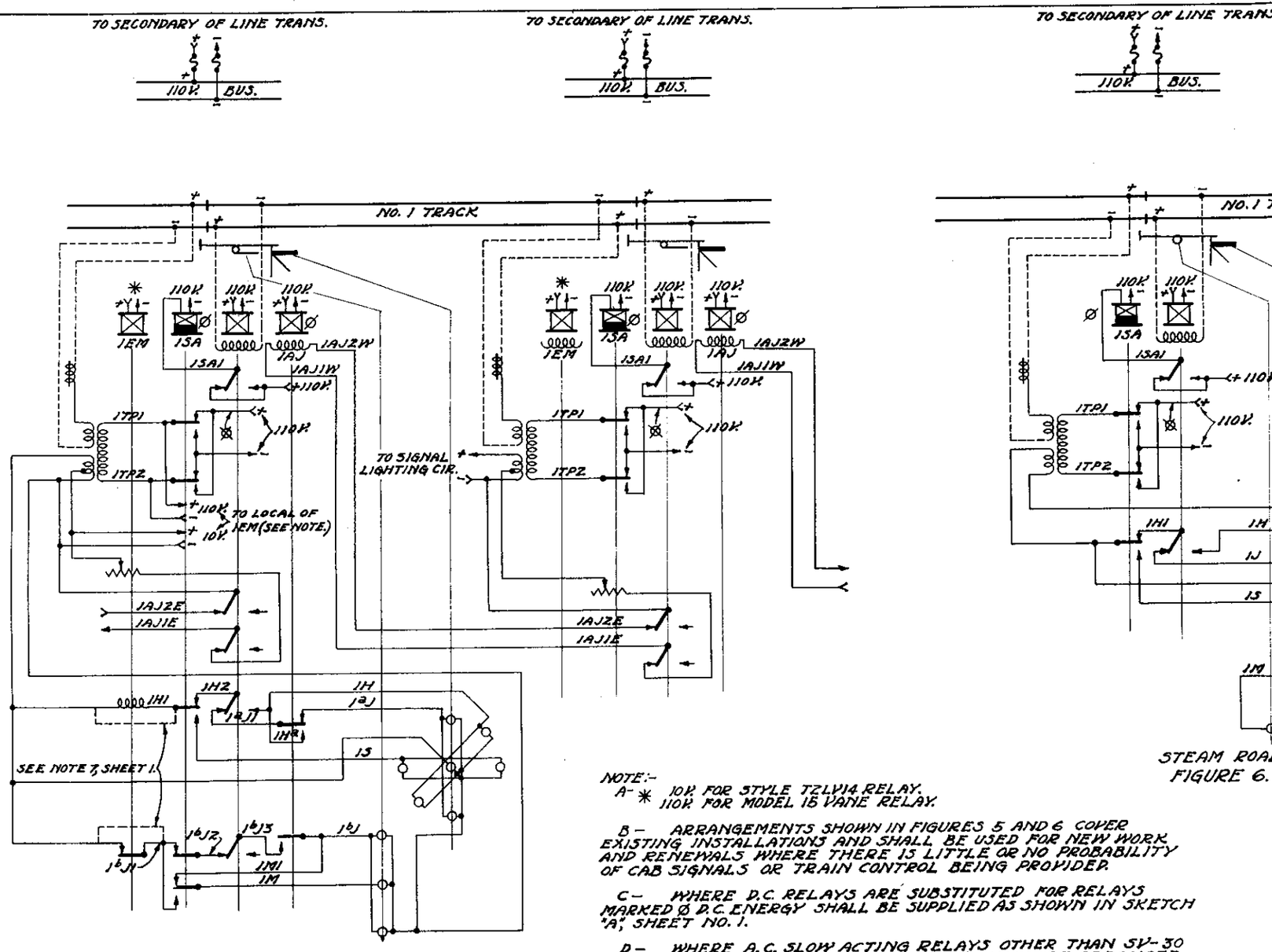

STEAM ROAD.
FIGURE 5.

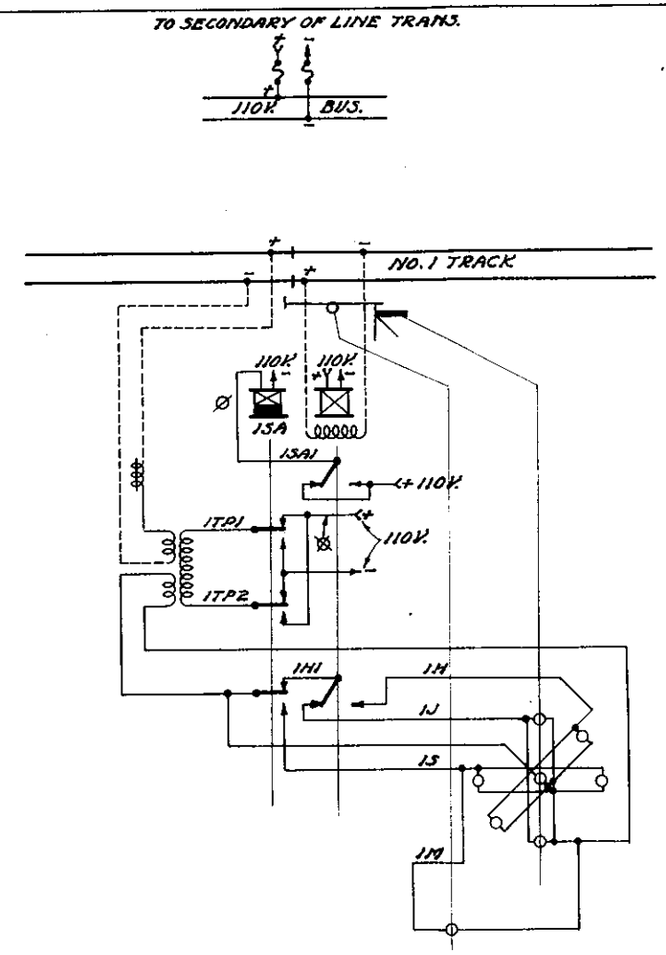

STEAM ROAD.
FIGURE 6.

NOTE:-
A- * 10V. FOR STYLE T2LV14 RELAY.
110V. FOR MODEL 15 VANE RELAY.

B- ARRANGEMENTS SHOWN IN FIGURES 5 AND 6 COVER EXISTING INSTALLATIONS AND SHALL BE USED FOR NEW WORK AND RENEWALS WHERE THERE IS LITTLE OR NO PROBABILITY OF CAB SIGNALS OR TRAIN CONTROL BEING PROVIDED.

C- WHERE D.C. RELAYS ARE SUBSTITUTED FOR RELAYS MARKED Ø D.C. ENERGY SHALL BE SUPPLIED AS SHOWN IN SKETCH "A", SHEET NO. 1.

D- WHERE A.C. SLOW ACTING RELAYS OTHER THAN SV-30 OR SV-32 ARE USED CIRCUITS MARKED ⊠ SHALL BE ARRANGED AS SHOWN IN SKETCH "B", SHEET NO. 1.

FOR GENERAL NOTES SEE SHEET NO. 1.

REVISIONS

REDRAWN FROM SHEETS 3 & 5 OF PLAN S-857 DATED 10-18-21
SHEET 3 LAST REVISED 11-9-23
SHEET 5 LAST REVISED 3-27-22.

SHEET 4 OF 4

S-857

THE PENNSYLVANIA RAILROAD
STANDARD
CIRCUITS FOR POSITION LIGHT AUTOMATIC SIGNALS

OFFICE OF CHIEF SIGNAL ENGINEER,
PHILA., PA., FEB. 14, 1927

NOT TO SCALE

Approved
Chief Signal Engineer

Approved
Chief Engineer

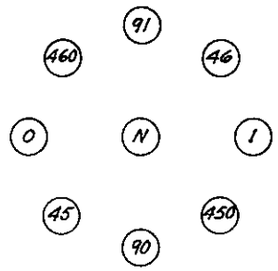

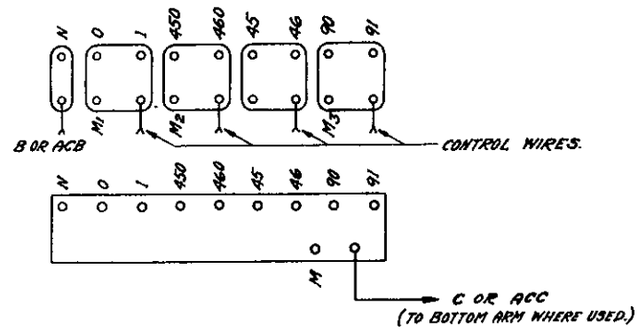

N = NEUTRAL LAMP.
0-1 = STOP LAMPS.
45-46 = APPROACH LAMPS.
450-460 = { PERMISSIVE LAMPS - FIG'S. 1-2-6-7-10 & 17.
CAUTION LAMPS - FIG'S. 8-9-13-18 & 19.
90-91 = CLEAR LAMPS.
M = MARKER LAMP.

TOP ARM (WITH MARKER LIGHT, WHERE BOTTOM ARM IS NOT USED.)

FIGURE NUMBER	WHEN SIGNAL IS	THESE TERMINALS ARE SPARE	FIGURE NUMBER	WHEN SIGNAL IS	THESE TERMINALS ARE SPARE	FIGURE NUMBER	WHEN SIGNAL IS	THESE TERMINALS ARE SPARE.	FIGURE NUMBER	WHEN SIGNAL IS	THESE TERMINALS ARE SPARE
1	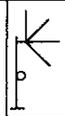	M_1-M_2	7		M-M_1-M_2-M_3-45-46	13	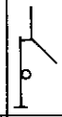	M_1-M_3-0-1-45-46	19		M-M_1-M_2-M_3-0-1-90-91.
2	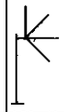	M-M_1-M_2-M_3	8	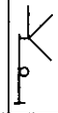	M_1-M_3-0-1	14 INTERLOCKING SIGNAL.	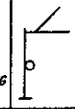	M_1-M_3-90-91-450-460.	20		M_1-M_3-45-46-90-91-450-460.
3 INTERLOCKING SIGNAL	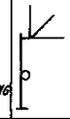	M_1-M_3-450-460	9	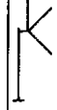	M-M_1-M_2-M_3-0-1	15 AUTOMATIC SIGNAL.		M_2-M_3-90-91-450-460.	21		M-M_1-M_2-M_3-45-46-90-91-450-460. NOTE:- WHERE NO "LIGHT-OUT" RELAY IS USED "B" OR "ACB" TO TERMINAL "N" SHALL BE OMITTED AND "N" SHALL BE CONNECTED TO TERMINAL "0-1."
4 AUTOMATIC SIGNAL.	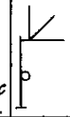	M_2-M_3-450-460	10		M-M_1-M_2-M_3-90-91	16		M-M_1-M_2-M_3-90-91-450-460.			
5	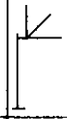	M-M_1-M_2-M_3-450-460	11	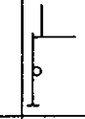	M_1-M_2-45-46-450-460.	17	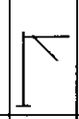	M-M_1-M_2-M_3-45-46-90-91			
6	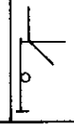	M_1-M_2-45-46	12	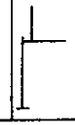	M-M_1-M_2-M_3-45-46-450-460	18	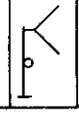	M_1-M_3-0-1-90-91.			

REVISIONS.

3-3-25. FIGURES 1, 6, 11 & 20 ADDED.
APPROVED: A.H. Rudd

REDRAWN FROM SHEETS 1,2,3 & 4 OF PLAN S-858 DATED 8-12-21 SH. 1 LAST REVISED 11-9-23.

SHEET 1 OF 2

S-858

PENNSYLVANIA RAILROAD SYSTEM
STANDARD
ARRANGEMENT OF TERMINALS IN TERMINAL BOX OF POSITION LIGHT SIGNAL

OFFICE OF CHIEF SIGNAL ENGINEER,
PHILA., PA., MAR. 3, 1920

NOT TO SCALE

Approved A.H. Rudd
Chief Signal Engineer

Approved J.T. Murray
Asst. Chief Engineer

RFC.
R.A.H.

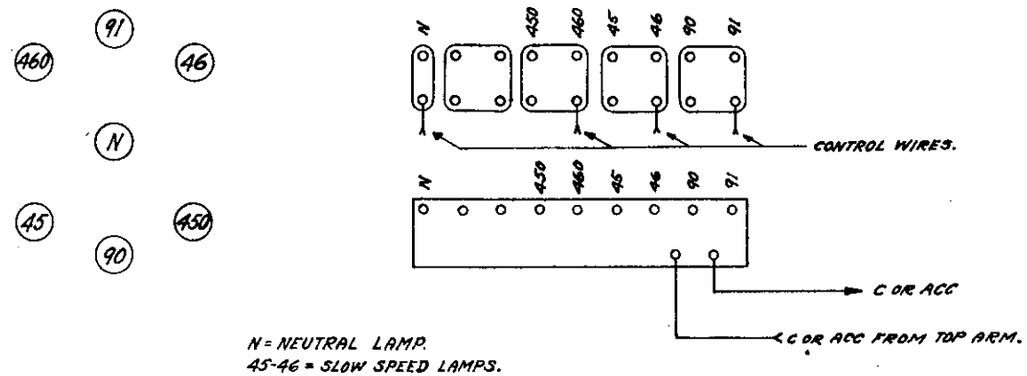

N = NEUTRAL LAMP.
45-46 = SLOW SPEED LAMPS.
450-460 = CAUTION SLOW SPEED LAMPS.
90-91 = RESTRICTING LAMPS.

BOTTOM ARM.

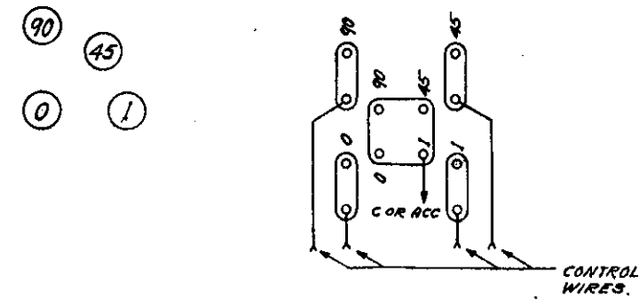

0-1 = STOP LAMPS.
0-45 = SLOW SPEED LAMPS.
0-90 = CLEAR SLOW SPEED LAMPS.
1-90 = CAUTION SLOW SPEED LAMPS.

DWARF SIGNAL.

BOTTOM ARM.									DWARF SIGNAL.		
FIGURE NUMBER	WHEN SIGNAL IS	THESE TERMINALS ARE SPARE	FIGURE NUMBER	WHEN SIGNAL IS	THESE TERMINALS ARE SPARE.	FIGURE NUMBER	WHEN SIGNAL IS	THESE TERMINALS ARE SPARE	FIGURE NUMBER	WHEN SIGNAL IS	THESE TERMINALS ARE SPARE.
24		—	30		90-91				42		—
25		—	31		90-91				43		—
26	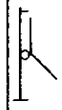	45-46	32		90-91-450-460				44		—
27	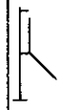	45-46	33		45-46-90-91				45		90
28	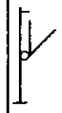	450-460	34	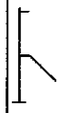	N-45-46-90-91. WIRE "N" SHALL BE CONNECTED TO TERMINAL 450-460.				46		45
29	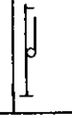	45-46-450-460									

REVISIONS.

3-3-25. FIGURES 25, 26, 30, 31 & 33 ADDED.
APPROVED :- A H Rudd

REDRAWN FROM SHEETS 5 & 7 OF PLAN S-858 DATED 8-12-21 AND SHEET 8 DATED 7-3-22. SHEET 6 MADE OBSOLETE.

SHEET 2 OF 2

S-858

PENNSYLVANIA RAILROAD SYSTEM
STANDARD
ARRANGEMENT OF TERMINALS IN TERMINAL BOX OF POSITION LIGHT SIGNAL

OFFICE OF CHIEF SIGNAL ENGINEER,
PHILA., PA., MAR. 3, 1925

NOT TO SCALE

Approved A H Rudd Chief Signal Engineer

Approved R J Murray Asst Chief Engineer

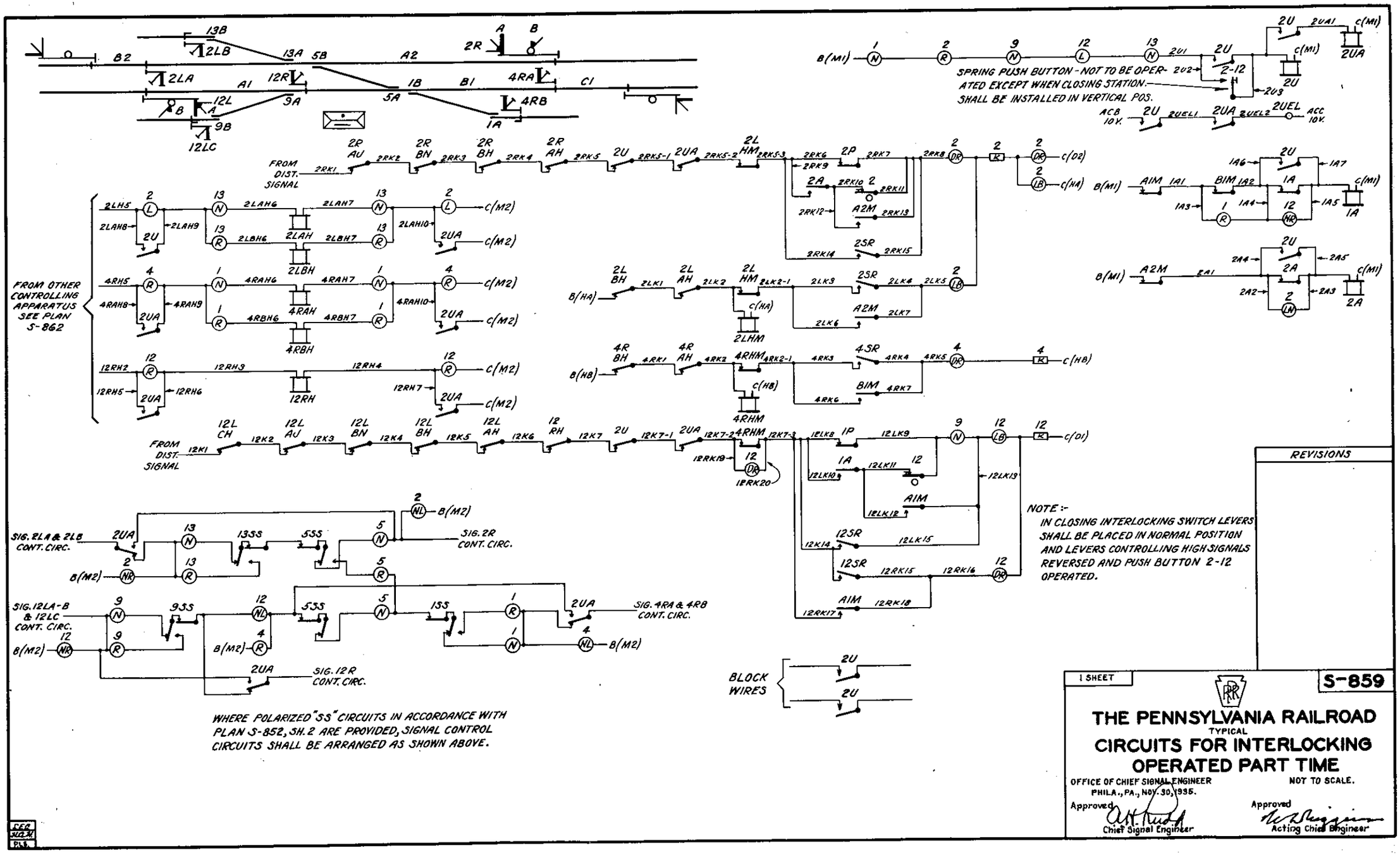
FROM OTHER CONTROLLING APPARATUS SEE PLAN S-862
FROM DIST. SIGNAL
SIG. 2LA & 2LB CONT. CIRC.
SIG. 2R CONT. CIRC.
SIG. 12LA-B & 12LC CONT. CIRC.
SIG. 4RA & 4RB CONT. CIRC.
SIG. 12R CONT. CIRC.
BLOCK WIRES
SPRING PUSH BUTTON - NOT TO BE OPERATED EXCEPT WHEN CLOSING STATION. SHALL BE INSTALLED IN VERTICAL POS.
NOTE :- IN CLOSING INTERLOCKING SWITCH LEVERS SHALL BE PLACED IN NORMAL POSITION AND LEVERS CONTROLLING HIGH SIGNALS REVERSED AND PUSH BUTTON 2-12 OPERATED.
WHERE POLARIZED "SS" CIRCUITS IN ACCORDANCE WITH PLAN S-852, SH. 2 ARE PROVIDED, SIGNAL CONTROL CIRCUITS SHALL BE ARRANGED AS SHOWN ABOVE.
REVISIONS
1 SHEET
S-859
THE PENNSYLVANIA RAILROAD
TYPICAL
CIRCUITS FOR INTERLOCKING OPERATED PART TIME
OFFICE OF CHIEF SIGNAL ENGINEER
PHILA., PA., NOV. 30, 1935.
NOT TO SCALE.
Approved
Chief Signal Engineer
Approved
Acting Chief Engineer

J.P.4.

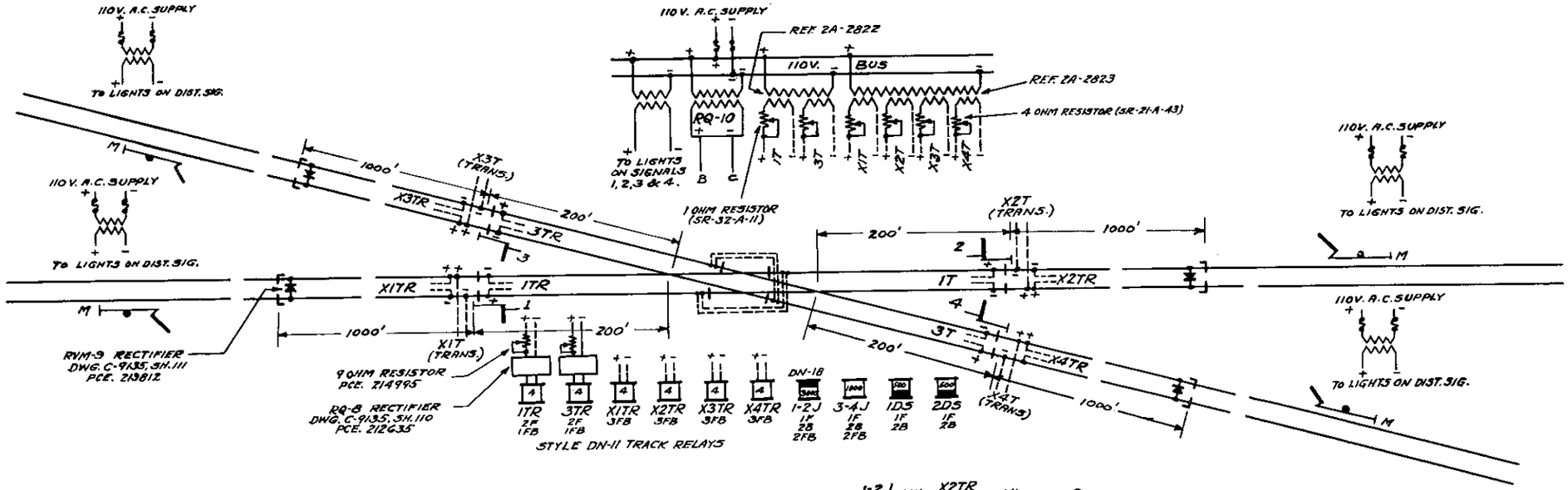

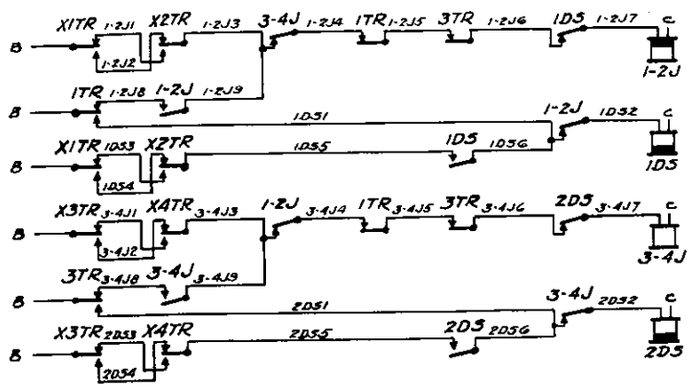

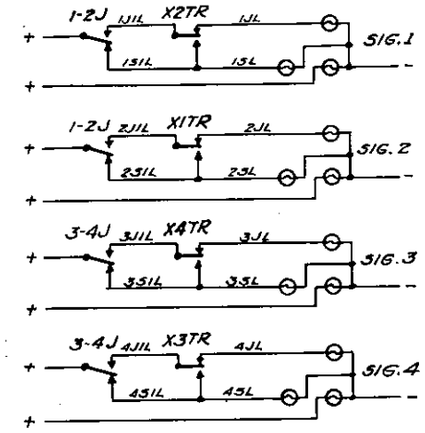

NOTE:

AUTHORIZED SPEED OVER CROSSING - 15 M.P.H.

CROSSING SIGNALS - POSITION LIGHT TYPE DWARF SIGNALS MOUNTED NOT LESS THAN 3 FEET ABOVE TOP OF RAIL.

WHERE RELIABLE A.C. POWER IS NOT AVAILABLE AND CONDITIONS WARRANT D.C. POWER MAY BE PROVIDED.

FOR LINES OF LIGHT TRAFFIC

REVISIONS

SHEET 2 OF 2

S-844

THE PENNSYLVANIA RAILROAD

TYPICAL

CIRCUITS FOR AUTOMATIC INTERLOCKING AT RAILROAD GRADE CROSSING

OFFICE OF CHIEF ENGINEER, PHILA., PA., NOVEMBER 4, 1948.

APPROVED: H. C. Griffith
ASST. CHIEF ENGINEER-T.C.S.

APPROVED: J. Hassett
CHIEF ENGINEER

V.G.H.

EACH BATTERY SHALL CONSIST OF TWENTY (20) TYPE HA-1000 CELLS. WHERE FIG. 2A IS USED AND MORE THAN 8 LAMPS ARE PROVIDED TYPE HA-1302 CELLS SHALL BE USED. (SEE NOTE 12)

PRIMARY BATTERY OPERATION WHERE A.C. POWER IS NOT AVAILABLE.

FIGURE 1A

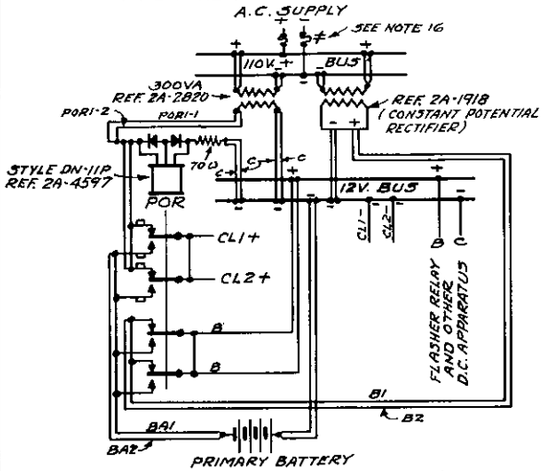

PRIMARY BATTERY SHALL CONSIST OF TWENTY (20) TYPE HA CELLS. WHERE NOT MORE THAN 8 LAMPS ARE PROVIDED USE TYPE HA-1000 CELLS. WHERE MORE THAN 8 LAMPS ARE PROVIDED USE HA-1302 CELLS. (SEE NOTE 12)

FOR USE WHERE A.C. SUPPLY IS AVAILABLE AND PRIMARY BATTERY STANDBY IS PROVIDED.

FIGURE 1B

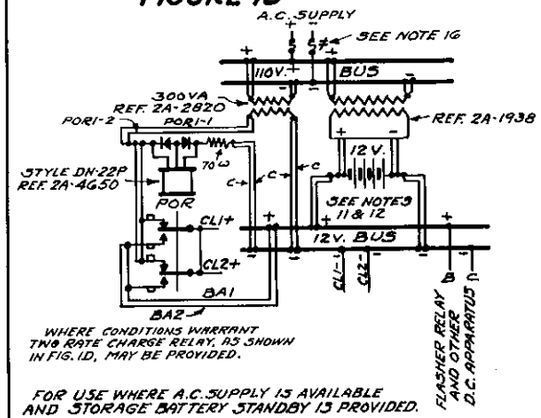

WHERE CONDITIONS WARRANT TWO RATE CHARGE RELAY, AS SHOWN IN FIG. 1D, MAY BE PROVIDED.

FOR USE WHERE A.C. SUPPLY IS AVAILABLE AND STORAGE BATTERY STANDBY IS PROVIDED.

FIGURE 1C

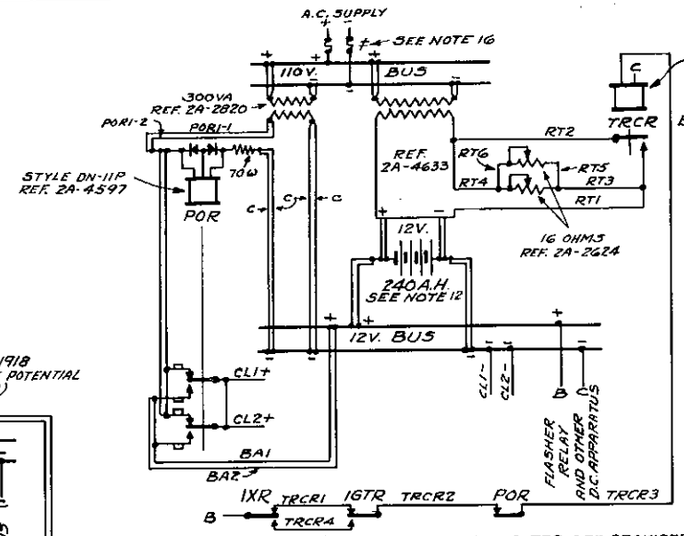

FOR USE WHERE AUTOMATIC CROSSING GATES ARE PROVIDED. WHERE MORE THAN TWO GATE MECHANISMS ARE REQUIRED ARRANGEMENT SHOWN ABOVE MAY BE PROVIDED FOR CONTROL OF GATE MECHANISMS AND A SEPARATE BATTERY PROVIDED FOR OTHER D.C. APPARATUS AND FLASHING LIGHT SIGNALS.

FIGURE 1D

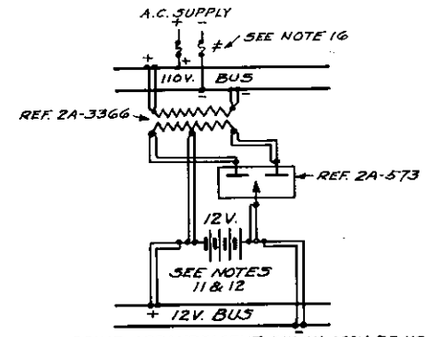

BATTERY CHARGING ARRANGEMENT WHICH MAY BE USED IN LIEU OF ARRANGEMENT SHOWN FOR CHARGING BATTERIES IN FIGURES 1C & 1D.

FIGURE 1E

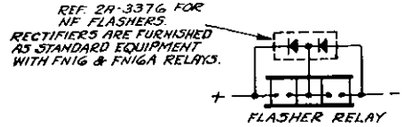

APPLICATION OF RECTIFIER FOR ELIMINATION OF RADIO INTERFERENCE.

FIGURE 1F

NOTES:-

1. FLASHING LIGHT CROSSING SIGNALS SHALL BE INSTALLED IN ACCORDANCE WITH PLAN S-463.
2. AUTOMATIC CROSSING GATES SHALL BE INSTALLED IN ACCORDANCE WITH PLAN S-462.
3. TRACK CIRCUITS SHOWN ARE TYPICAL. DETAIL ARRANGEMENT OF TRACK CIRCUITS MUST BE MADE FOR EACH INSTALLATION TO SUIT LOCAL CONDITIONS AND REQUIREMENTS.
4. A SHORT TRACK CIRCUIT SHALL BE PROVIDED OVER HIGHWAY CROSSINGS TO OPERATE SIGNALS (AND GATES) WHEN TRAIN BLOCKS CROSSING:
   A. IN SINGLE TRACK TERRITORY.
   B. IN TERRITORY WHERE RULE 261 IS IN EFFECT.
   C. TO COMPLY WITH STATE OR LOCAL REQUIREMENTS.
   D. WHERE WARRANTED BY NUMBER OF REVERSE MOVEMENTS WITH TRAIN ORDERS.
   E. AT OTHER LOCATIONS (EXCEPT WHERE AUTOMATIC GATES ARE INSTALLED) SHORT TRACK CIRCUITS MAY BE OMITTED AND INSULATING RAIL JOINTS SHALL BE LOCATED EAST (OR NORTH) OF CROSSING FOR EASTWARD (OR NORTHWARD) TRACKS AND WEST (OR SOUTH) OF CROSSING FOR WESTWARD (OR SOUTHWARD) TRACKS.
5. (a) THE LOCATION OF INSULATING JOINTS, ESTABLISHING TRACK CIRCUITS FOR INITIATING THE OPERATION OF HIGHWAY CROSSING PROTECTION, SHOULD BE ESTABLISHED, INSOFAR AS PRACTICABLE, TO PROVIDE A STARTING TIME OF 30 SECONDS BUT NOT TO EXCEED 50 SECONDS.
   (b) THE STARTING TIME OF 30 SECONDS SHOULD BE BASED ON A MAXIMUM SPEED AS OUTLINED IN THE FOLLOWING:-
   1. WHERE SPEEDS OF 100 MILES PER HOUR MAY BE ATTAINED AND IT IS ANTICIPATED SUCH SPEEDS WILL BE ATTAINED - MAXIMUM SPEED: 100 MILES PER HOUR.
   2. WHERE SPEED UNDER (1) IS NOT CONTEMPLATED - MAXIMUM AUTHORIZED SPEED.
   (c) IN ESTABLISHING STARTING SECTIONS EXISTING CUT-SECTIONS AND SIGNAL LOCATIONS SHALL BE UTILIZED WHEREVER PRACTICABLE AND, IN ORDER TO TAKE ADVANTAGE OF THESE LOCATIONS, THE MINIMUM STARTING TIME OF 30 SECONDS MAY BE REDUCED TO NOT EXCEEDING 10%.
   1. WHERE THE DISTANCE FROM THE MOST REMOTE CROSSING SIGNAL TO CLEARANCE OF THE FARTHEST TRACK, AS MEASURED PARALLEL TO THE CENTER LINE OF THE HIGHWAY, IS MORE THAN 35 FEET THE MINIMUM TIME SHALL BE INCREASED BY ONE SECOND FOR EACH ADDITIONAL 5 FEET.
   (d) WHERE TRACK CIRCUIT LOCATIONS ARE ESTABLISED OR WHERE EXISTING TRACK CIRCUIT LOCATIONS ARE UTILIZED FOR OBTAINING A STARTING TIME FOR CONTEMPLATED INCREASE OF MAXIMUM AUTHORIZED SPEEDS, STARTING TIME FOR THE MAXIMUM AUTHORIZED SPEED IN EFFECT IS TO BE OBTAINED BY THE USE OF APPROVED RETARDING DEVICE OR DEVICES.
   (e) ANY EXCEPTION, TO THE ABOVE, AS MAY BE REQUIRED TO MEET STATE OR LOCAL AUTHORITIES, SHOULD BE AGREED TO ONLY AFTER FULL DELIBERATION AND COMPLETE RECORD OF NEGOTIATIONS SHOULD BE KEPT IN FILE INDICATING REASONS FOR NOT ACCEPTING STANDARDS PRESCRIBED.
6. WHERE SHORT TRACK CIRCUIT IS PROVIDED OVER CROSSING INSULATING RAIL JOINTS SHALL BE LOCATED PREFERABLY 70 FEET EACH SIDE OF CROSSING BUT NOT IN EXCESS OF 100 FEET. WHERE DUE TO LOCAL CONDITIONS, INSULATING JOINTS SHOULD BE LOCATED A GREATER DISTANCE, APPROVAL OF THE CHIEF ENGINEER SHOULD BE OBTAINED.
7. INSULATING RAIL JOINTS SHALL BE PLACED IN ACCORDANCE WITH CURRENT ISSUE OF C.E. 78.
8. CIRCUITS FOR OPERATION OF AUTOMATIC CROSSING GATES SHALL BE SO ARRANGED THAT GATES WILL START TO ASSUME HORIZONTAL POSITION BETWEEN 3 AND 5 SECONDS AFTER FLASHING LIGHT SIGNALS START TO OPERATE.
9. EACH SIGNAL SHALL BE PROVIDED WITH TWO RETURN WIRES. WIRES BETWEEN INSTRUMENT CASE AND SIGNALS SHALL BE NO. 9 A.W.G.
10. WHERE LINE WIRES ARE REQUIRED FOR CONTROL OF CROSSING SIGNALS, TWO WIRE DOUBLE BREAK CIRCUITS SHALL BE PROVIDED.
11. TYPE AND CAPACITY OF STORAGE BATTERIES SHALL BE IN ACCORDANCE WITH LETTER OF GENERAL PRACTICE NO. 220-C.
12. BATTERIES SHALL BE HOUSED, IN INSULATED BATTERY BOXES, IN CONCRETE BOXES BELOW GROUND OR IN HEATED BUILDINGS.
13. RECOMMENDED VOLTAGE AT LAMPS APPROXIMATELY 12.0V., MINIMUM 11.5V, MAXIMUM 13.0V. AND CIRCUITS ADJUSTED TO GIVE THE SAME VOLTAGE FOR LAMPS ON EACH SIGNAL.
14. TEST SWITCHES SHALL BE PROVIDED WHERE DESIGNATED EMPLOYES ARE AUTHORIZED TO TEST CROSSING SIGNALS AND SHALL BE ACCESSIBLE TO ONLY SUCH EMPLOYES. SWITCHES SHALL NOT BE LOCATED IN INSTRUMENT CASES AND MUST BE INSTALLED SO THAT SWITCH IS CLOSED WHEN DOOR OF HOUSING IS CLOSED.
15. A POWER-OFF INDICATION LAMP SHALL BE LOCATED ON INSTRUMENT CASE AT HIGHWAY CROSSING LOCATIONS. WHERE A.C. POWER IS AVAILABLE USE LAMP 4837, REF. 25E-4322. WHERE FIG. 1A IS PROVIDED USE LAMP 4832, REF. 25E-4211, WITH ADAPTOR, OMITTING 200 OHM RESISTOR. LAMPS SHALL BE PLACED IN U.S.&S.Co. HP-10 PILOT-LIGHT, PLATE K-137, REF. A, OMITTING LENS SHIELD FIG. 3 AND TO BE EQUIPPED WITH WHITE LENS.
16. OVERLOAD CIRCUIT BREAKERS OF APPROVED TYPE MAY BE USED IN PLACE OF FUSES MARKED ‡. IF COMMERCIAL CO'S. FUSES ARE PROVIDED WHERE CONNECTION IS MADE, FUSES MARKED ‡ SHALL BE OMITTED.
17. SIGNALS SHALL NOT BE LIGHTED EXCEPT FOR APPROACHING TRAINS WHEN RED LIGHTS FLASHING ALTERNATELY (30 TO 45 TIMES PER MINUTE) SHALL BE DISPLAYED.

REVISIONS

POWER SUPPLY & NOTES.

SHEET 1 OF 7

S-860

THE PENNSYLVANIA RAILROAD

TYPICAL

CIRCUITS FOR AUTOMATIC HIGHWAY CROSSING SIGNALS AND GATES

OFFICE OF CHIEF ENGINEER, PHILA., PA., DEC. 30, 1948.

NOT TO SCALE

APPROVED: ASST. CHIEF ENGINEER, T.-C.-S.

APPROVED: CHIEF ENGINEER

WGH

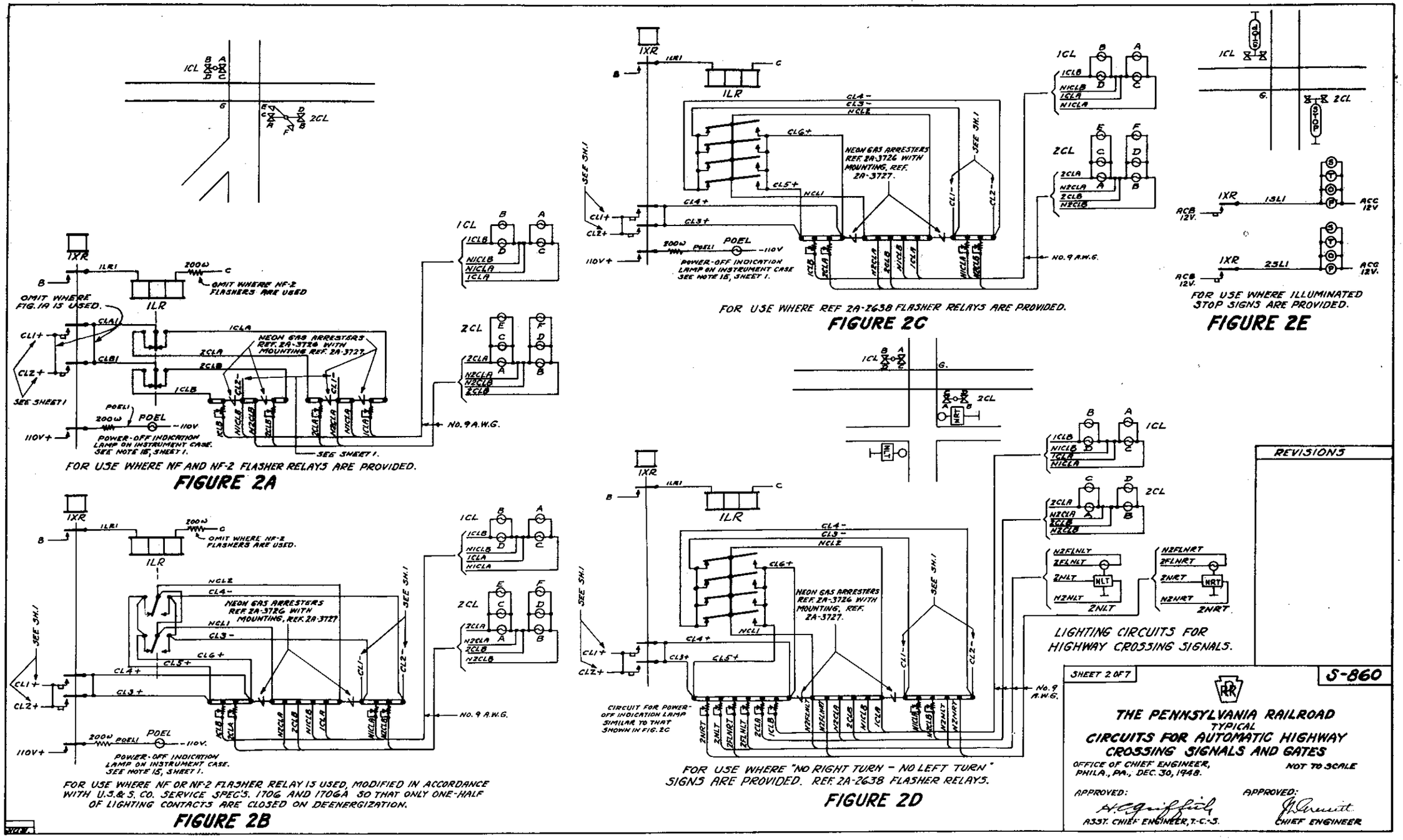

FOR USE WHERE NF AND NF-2 FLASHER RELAYS ARE PROVIDED.

FIGURE 2A

FOR USE WHERE NF OR NF-2 FLASHER RELAY IS USED, MODIFIED IN ACCORDANCE WITH U.S.&S. CO. SERVICE SPEC'S. 1706 AND 1706A SO THAT ONLY ONE-HALF OF LIGHTING CONTACTS ARE CLOSED ON DEENERGIZATION.

FIGURE 2B

FOR USE WHERE REF 2A-2638 FLASHER RELAYS ARE PROVIDED.

FIGURE 2C

FOR USE WHERE "NO RIGHT TURN - NO LEFT TURN" SIGNS ARE PROVIDED. REF. 2A-2638 FLASHER RELAYS.

FIGURE 2D

FOR USE WHERE ILLUMINATED STOP SIGNS ARE PROVIDED.

FIGURE 2E

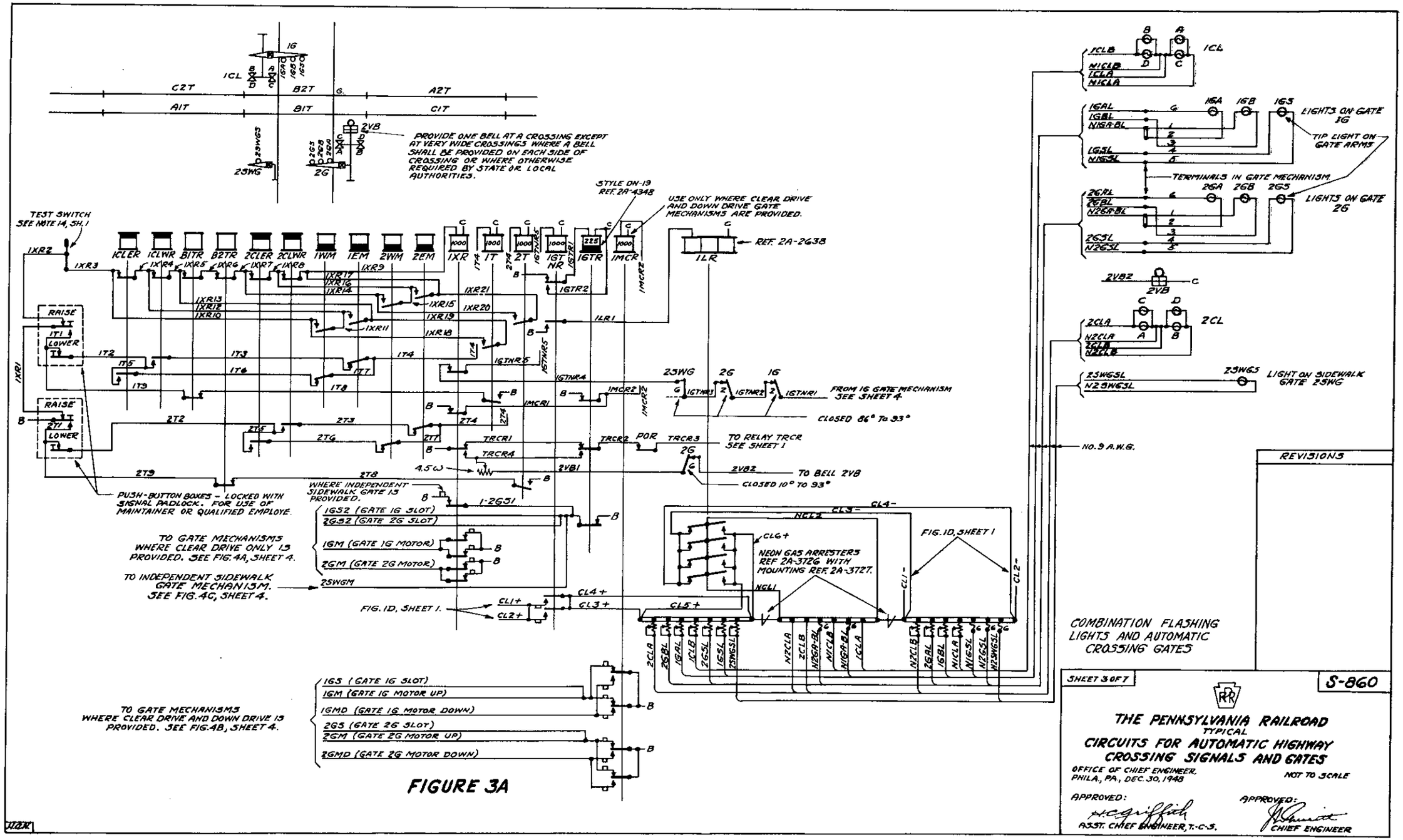
PROVIDE ONE BELL AT A CROSSING EXCEPT AT VERY WIDE CROSSINGS WHERE A BELL SHALL BE PROVIDED ON EACH SIDE OF CROSSING OR WHERE OTHERWISE REQUIRED BY STATE OR LOCAL AUTHORITIES.
STYLE DN-19 REF. 2A-4348
USE ONLY WHERE CLEAR DRIVE AND DOWN DRIVE GATE MECHANISMS ARE PROVIDED.
REF. 2A-2638
TEST SWITCH SEE NOTE 14, SH. 1
PUSH-BUTTON BOXES - LOCKED WITH SIGNAL PADLOCK. FOR USE OF MAINTAINER OR QUALIFIED EMPLOYE.
WHERE INDEPENDENT SIDEWALK GATE IS PROVIDED.
TO GATE MECHANISMS WHERE CLEAR DRIVE ONLY IS PROVIDED. SEE FIG. 4A, SHEET 4.
TO INDEPENDENT SIDEWALK GATE MECHANISM. SEE FIG. 4C, SHEET 4.
FIG. 1D, SHEET 1.
TO GATE MECHANISMS WHERE CLEAR DRIVE AND DOWN DRIVE IS PROVIDED. SEE FIG. 4B, SHEET 4.
FROM 1G GATE MECHANISM SEE SHEET 4.
CLOSED 86° TO 93°
TO RELAY TRCR SEE SHEET 1
TO BELL 2VB
CLOSED 10° TO 93°
NEON GAS ARRESTERS REF. 2A-3726 WITH MOUNTING REF. 2A-3727.
LIGHTS ON GATE 1G
TIP LIGHT ON GATE ARMS
TERMINALS IN GATE MECHANISM
LIGHTS ON GATE 2G
LIGHT ON SIDEWALK GATE 2SWG
NO. 9 A.W.G.
REVISIONS
COMBINATION FLASHING LIGHTS AND AUTOMATIC CROSSING GATES
SHEET 3 OF 7
S-860
THE PENNSYLVANIA RAILROAD
TYPICAL
CIRCUITS FOR AUTOMATIC HIGHWAY CROSSING SIGNALS AND GATES
OFFICE OF CHIEF ENGINEER, PHILA., PA., DEC. 30, 1948
NOT TO SCALE
APPROVED:
ASST. CHIEF ENGINEER, T.-C.S.
APPROVED:
CHIEF ENGINEER

FIGURE 3A

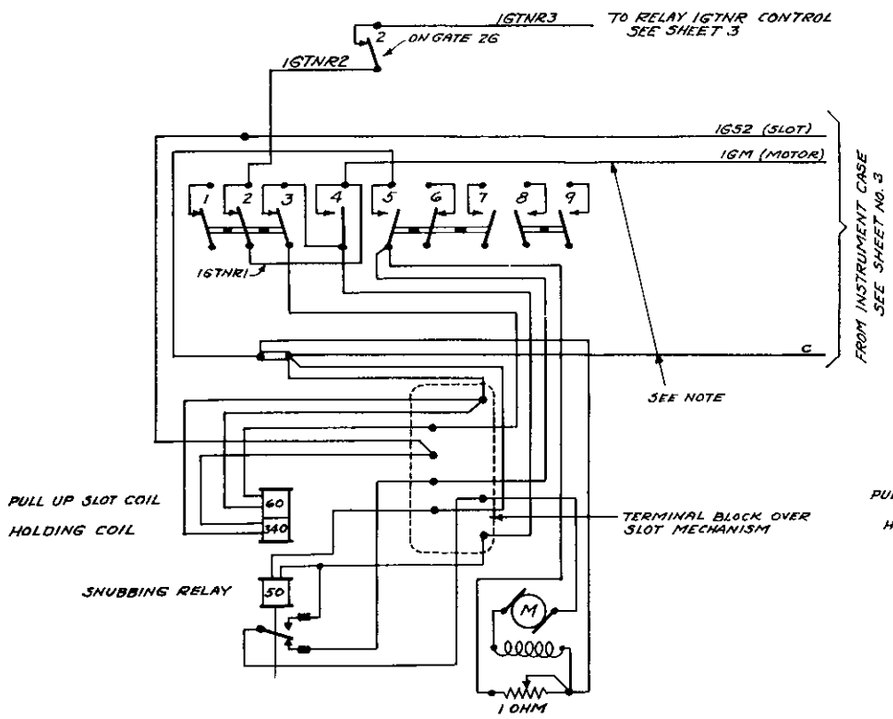

WIRING FOR GATE MECHANISM 3564
CLEAR DRIVE ONLY

FIGURE 4A

CIRCUIT CONTROLLER FUNCTIONS - FIGURES 4A & 4B		CONTACT OPERATION	
SPACE NUMBER	USE OF CONTROLLER	CONTACT CLOSED	CAM DRIVES CONTACT
0	TO OPEN MOTOR CIRCUIT DOWN (FIG. 4B)	46° TO 93°	OPEN
1	SPARE	86° TO 93°	CLOSED
2	TO CONTROL OF RELAY GTNR	86° TO 93°	CLOSED
3	TO PULL UP SLOT MAGNET	86° TO 93°	CLOSED
4	TO CUT OFF MOTOR AFTER GATE HAS CLEARED	0° TO 83° UP 83° TO 0° DOWN	CLOSED
5	TO CLOSE HEAVY SNUB CIRCUIT AS GATE ARM APPROACHES HORIZONTAL	0° TO 10°	CLOSED
6	TO OPEN BELL CIRCUIT WHEN GATE IS HORIZONTAL	10° TO 93°	OPEN
7	SPARE	0° TO 10°	CLOSED
8	SPARE	0° TO 89°	OPEN
9	SPARE	0° TO 89°	OPEN

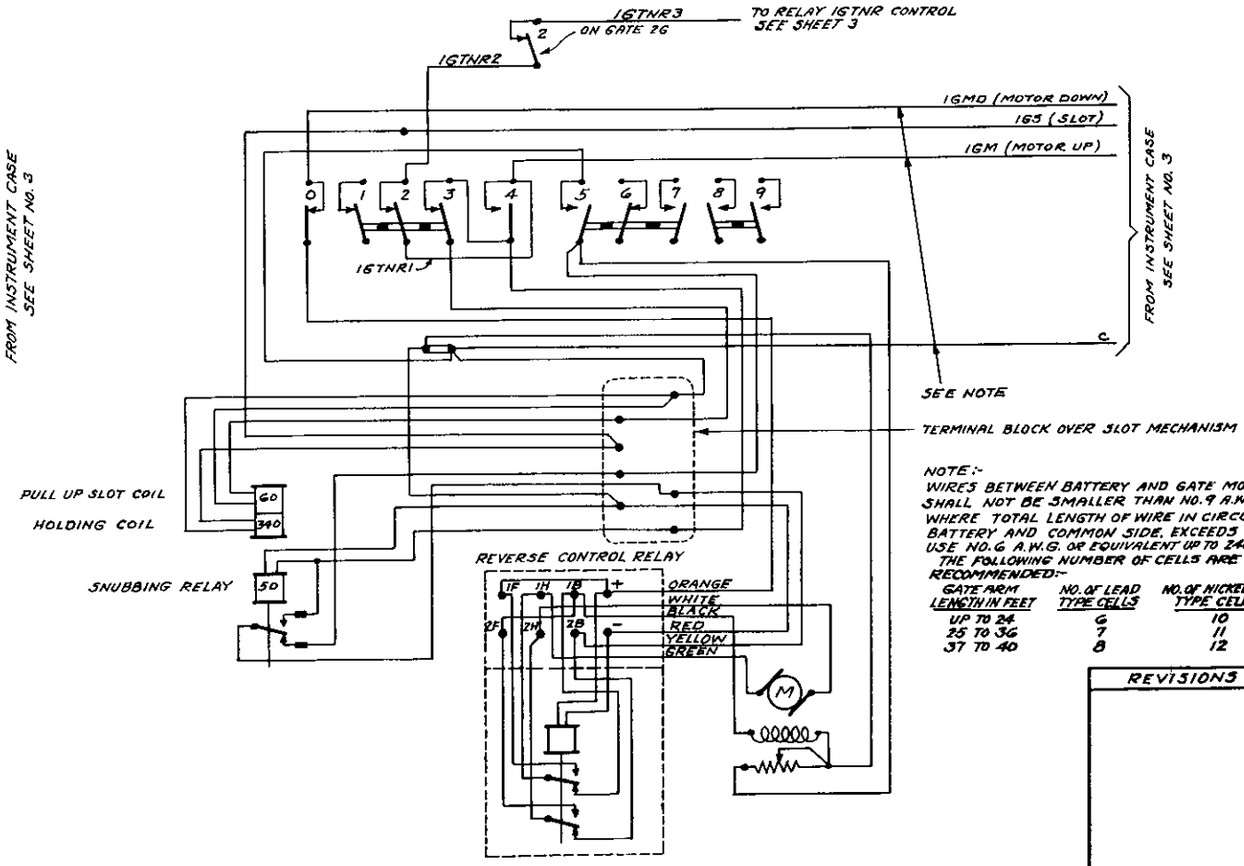

NOTE:-
WIRES BETWEEN BATTERY AND GATE MOTOR SHALL NOT BE SMALLER THAN NO. 9 A.W.G. WHERE TOTAL LENGTH OF WIRE IN CIRCUIT, BATTERY AND COMMON SIDE, EXCEEDS 120' USE NO. 6 A.W.G. OR EQUIVALENT UP TO 240'.
THE FOLLOWING NUMBER OF CELLS ARE RECOMMENDED:-

GATE ARM LENGTH IN FEET	NO. OF LEAD TYPE CELLS	NO. OF NICKEL-IRON TYPE CELLS
UP TO 24	6	10
25 TO 36	7	11
37 TO 40	8	12

WIRING FOR GATE MECHANISM 3564
CLEAR DRIVE AND DOWN DRIVE

FIGURE 4B

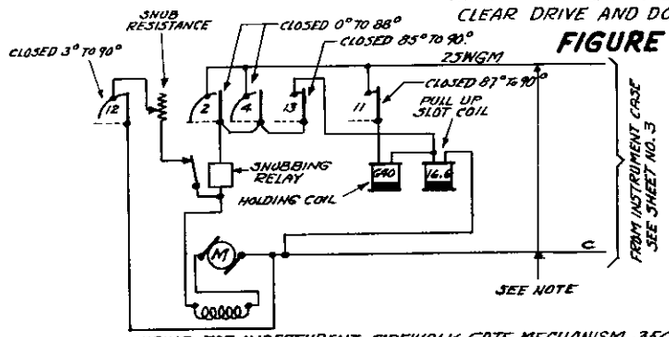

WIRING FOR INDEPENDENT SIDEWALK GATE MECHANISM 3561-21GL.
CLEAR DRIVE ONLY.

FIGURE 4C

WIRING FOR TYPE 3564 GATE MECHANISMS AND TYPE 3561-21GL INDEPENDENT SIDEWALK GATE MECHANISMS

REVISIONS

SHEET 4 OF 7

S-860

THE PENNSYLVANIA RAILROAD
TYPICAL
CIRCUITS FOR AUTOMATIC HIGHWAY CROSSING SIGNALS AND GATES

OFFICE OF CHIEF ENGINEER,
PHILA., PA., DEC. 30, 1948

NOT TO SCALE

APPROVED:
ASST. CHIEF ENGINEER, T.C.S.

APPROVED:
CHIEF ENGINEER

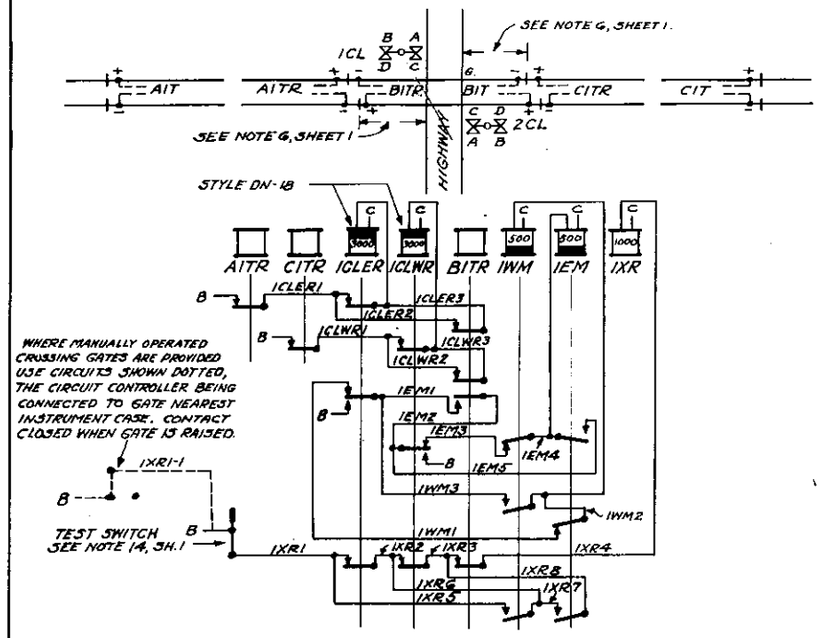

DIRECTIONAL CONTROL WHERE SHORT TRACK SECTION OVER CROSSING IS PROVIDED SEE NOTE 4, SHEET 1

FIGURE 5A

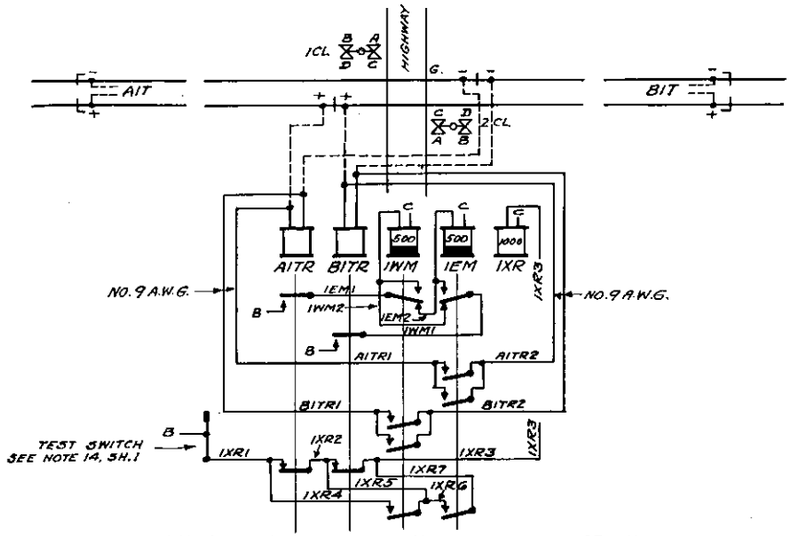

MAY BE USED IN STEAM TERRITORY WHERE FIXED SIGNALS ARE NOT CONTROLLED OVER TRACK SECTIONS AIT & BIT.

FIGURE 5C

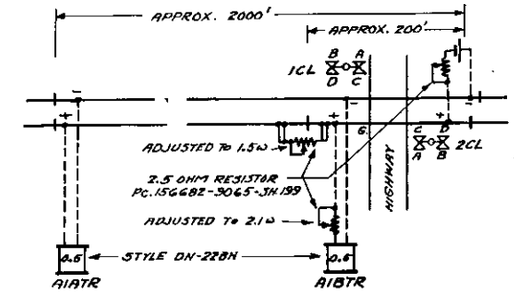

ARRANGEMENT SHOWN MAY BE PROVIDED IN D.C. STEAM TERRITORY TO OBTAIN SHORT TRACK SECTION OVER CROSSING. DIRECTIONAL CONTROL SHALL BE SIMILAR TO FIG. 5B.

FIGURE 5E

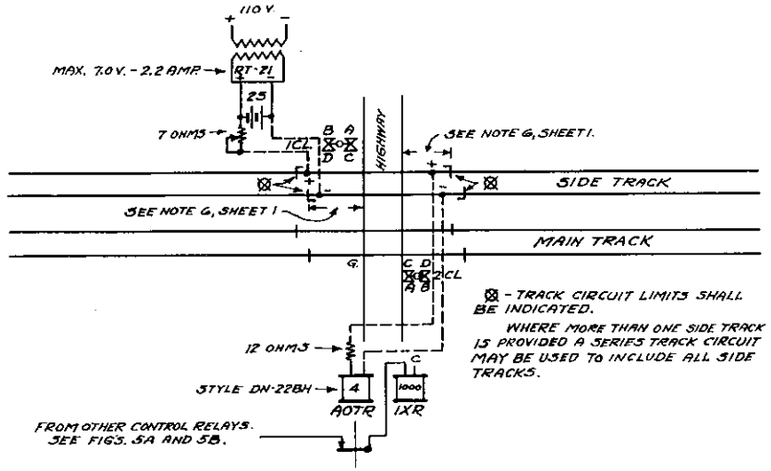

⊠ - TRACK CIRCUIT LIMITS SHALL BE INDICATED.

WHERE MORE THAN ONE SIDE TRACK IS PROVIDED A SERIES TRACK CIRCUIT MAY BE USED TO INCLUDE ALL SIDE TRACKS.

WHERE MOVEMENTS ON SIDE TRACK ARE SUFFICIENTLY FREQUENT TO GIVE GOOD SHUNTING SENSITIVITY, A 4 OHM DN-11 TRACK RELAY WITH A 10 OHM RESISTOR IN SERIES, FED FROM 1 CELL LEAD STORAGE OR EQUIVALENT IN VOLTAGE, MAY BE USED.

FIGURE 5D

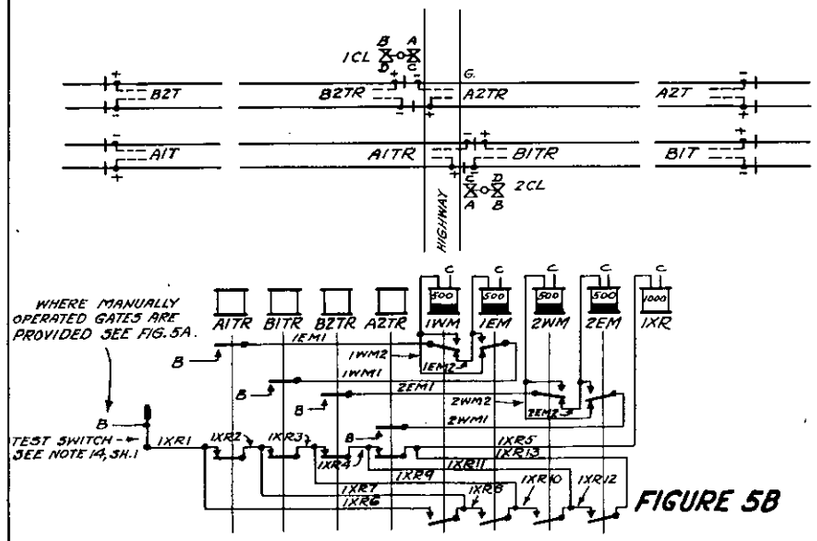

FIGURE 5B

DIRECTIONAL CONTROL WHERE NO SHORT TRACK SECTION OVER CROSSING IS PROVIDED. SEE NOTE 4E, SHEET 1.

N.G.R.

REVISIONS

DIRECTIONAL CONTROLS AND SPECIAL TRACK CIRCUITS

SHEET 5 OF 7

S-860

THE PENNSYLVANIA RAILROAD

TYPICAL

CIRCUITS FOR AUTOMATIC HIGHWAY CROSSING SIGNALS AND GATES

OFFICE OF CHIEF ENGINEER.
PHILA., PA., DEC. 30, 1948.

NOT TO SCALE

APPROVED: H. C. Griffith, ASST. CHIEF ENGINEER, T.-C.-S.

APPROVED: J. H. Barnett, CHIEF ENGINEER

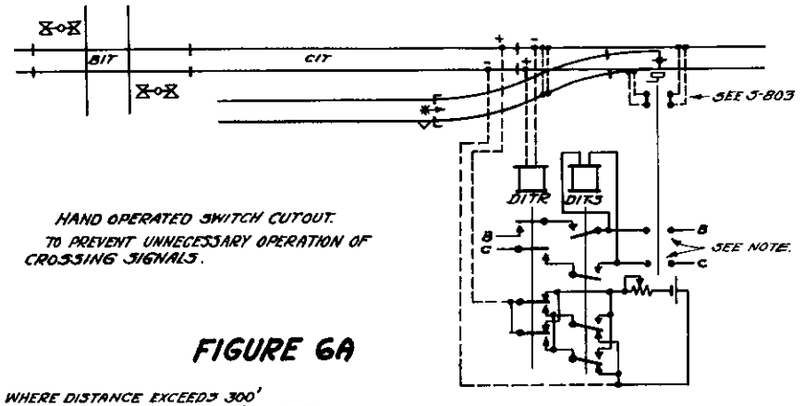

HAND OPERATED SWITCH CUTOUT.
TO PREVENT UNNECESSARY OPERATION OF CROSSING SIGNALS.

FIGURE 6A

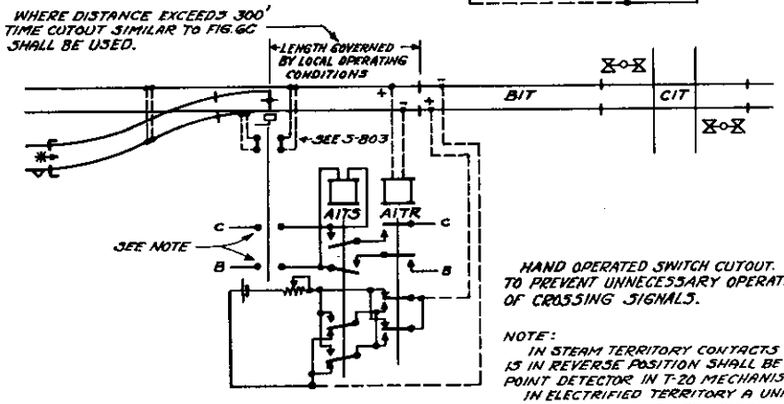

HAND OPERATED SWITCH CUTOUT.
TO PREVENT UNNECESSARY OPERATION OF CROSSING SIGNALS.

NOTE:
IN STEAM TERRITORY CONTACTS CLOSED WHEN SWITCH IS IN REVERSE POSITION SHALL BE OPERATED BY REVERSE POINT DETECTOR IN T-20 MECHANISM.
IN ELECTRIFIED TERRITORY A UNIVERSAL SWITCH CIRCUIT CONTROLLER SHALL BE PROVIDED.

FIGURE 6B

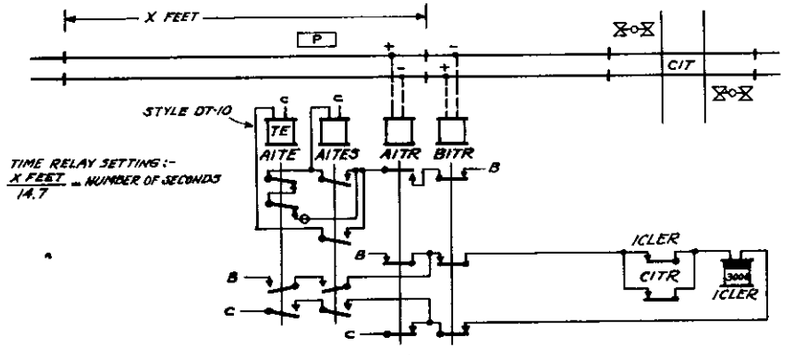

TIME RELAY SETTING:-
X FEET / 14.7 = NUMBER OF SECONDS

STATION STOP OR WATER PLUG TIME CUT OUT.

FIGURE 6C

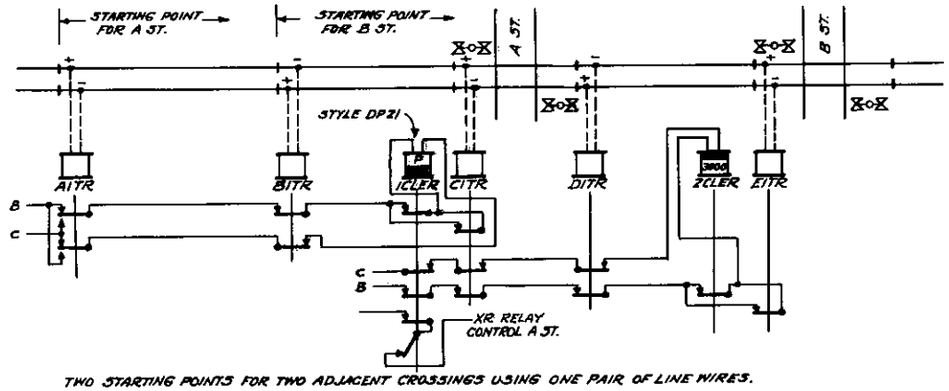

TWO STARTING POINTS FOR TWO ADJACENT CROSSINGS USING ONE PAIR OF LINE WIRES.

FIGURE 6D

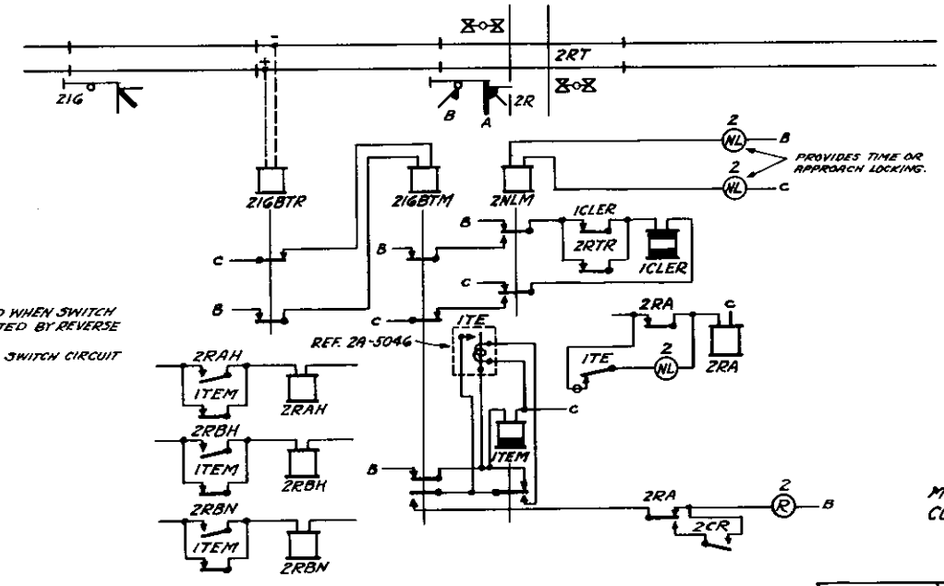

CROSSING LOCATED JUST BEYOND INTERLOCKING SIGNAL.

FIGURE 6E

ARRANGEMENTS SHOWN ARE ALSO FOR USE WHERE AUTOMATIC GATES ARE INSTALLED.

MISCELLANEOUS CONTROL CIRCUITS

REVISIONS

SHEET 6 OF 7

S-860

THE PENNSYLVANIA RAILROAD

TYPICAL
CIRCUITS FOR AUTOMATIC HIGHWAY CROSSING SIGNALS AND GATES

OFFICE OF CHIEF ENGINEER.
PHILA., PA., DEC. 30, 1948

NOT TO SCALE

APPROVED: H. C. Griffith
ASST. CHIEF ENGINEER, T-C-S.

APPROVED: [illegible]
CHIEF ENGINEER

H.O.H.

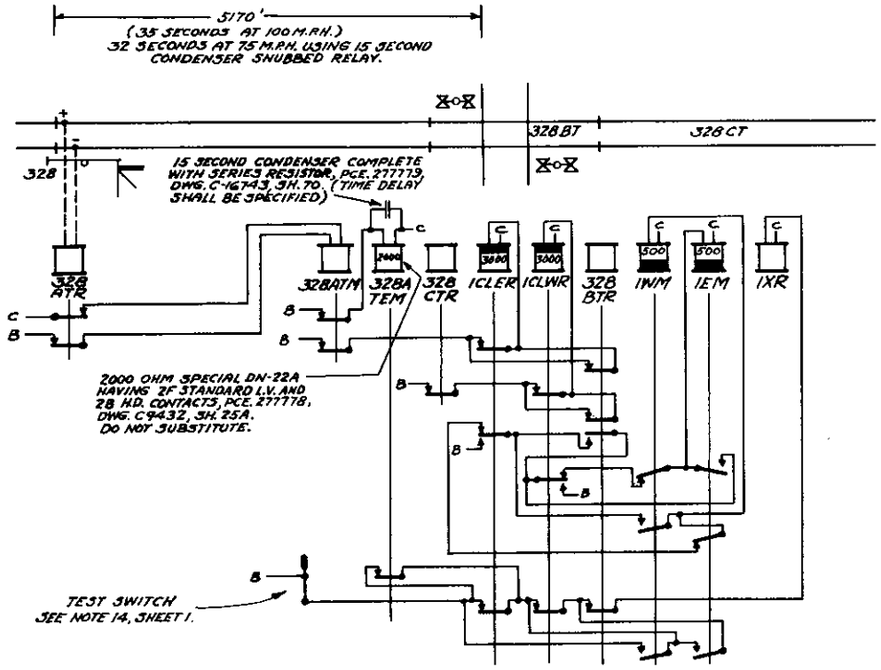

TIME DELAY CIRCUIT TO PERMIT USE OF EXISTING SIGNAL LOCATIONS OR CUT-SECTIONS FOR STARTING POINTS.

FIGURE 7A

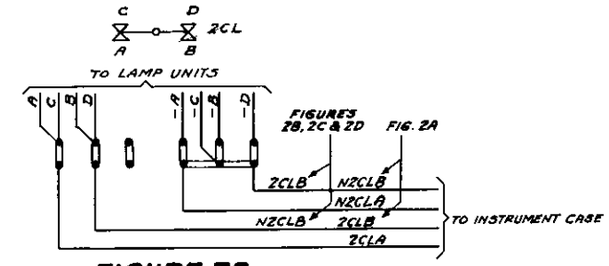

FIGURE 7B

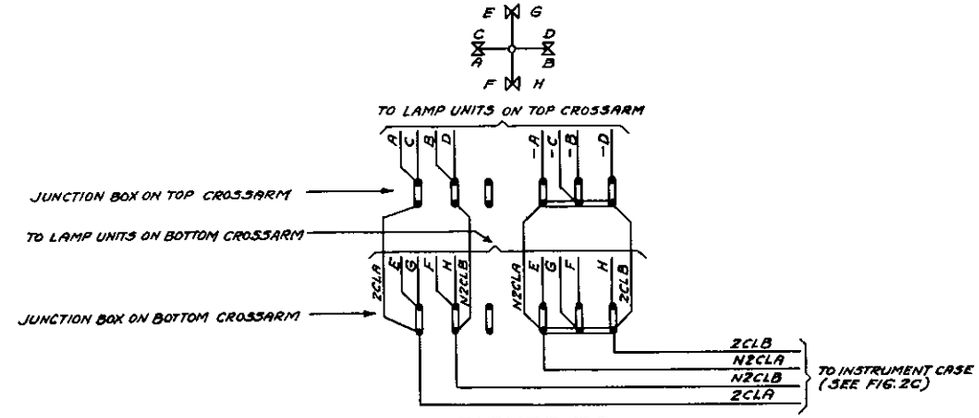

FIGURE 7C

WIRING OF TERMINALS IN JUNCTION BOX ON CROSSARMS

REVISIONS

TIME DELAY CIRCUIT
AND
JUNCTION BOX WIRING

SHEET 7 OF 7

S-860

THE PENNSYLVANIA RAILROAD

TYPICAL
CIRCUITS FOR AUTOMATIC HIGHWAY CROSSING SIGNALS AND GATES

OFFICE OF CHIEF ENGINEER,
PHILA., PA., DEC. 30, 1948

NOT TO SCALE

APPROVED: W.C. Griffith
ASST. CHIEF ENGINEER, T-C-S.

APPROVED: R. Quiggle
CHIEF ENGINEER

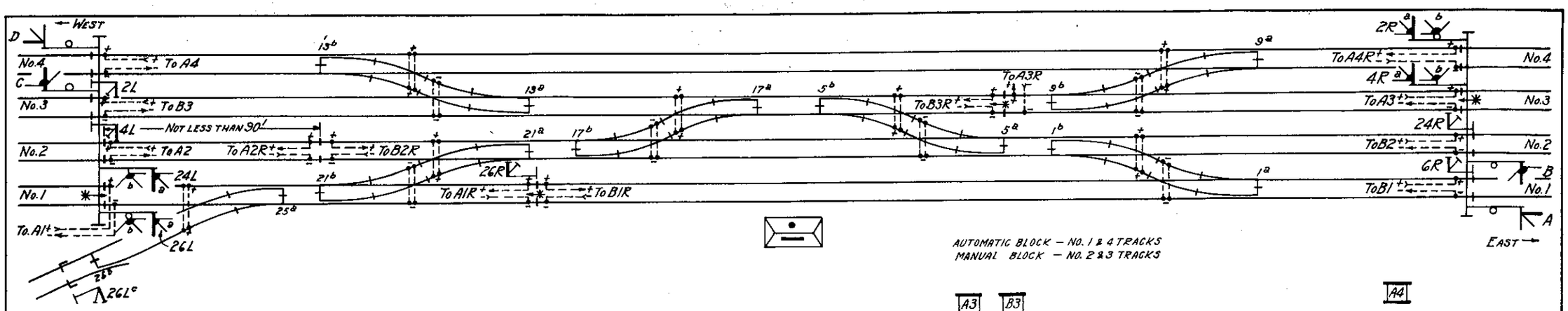

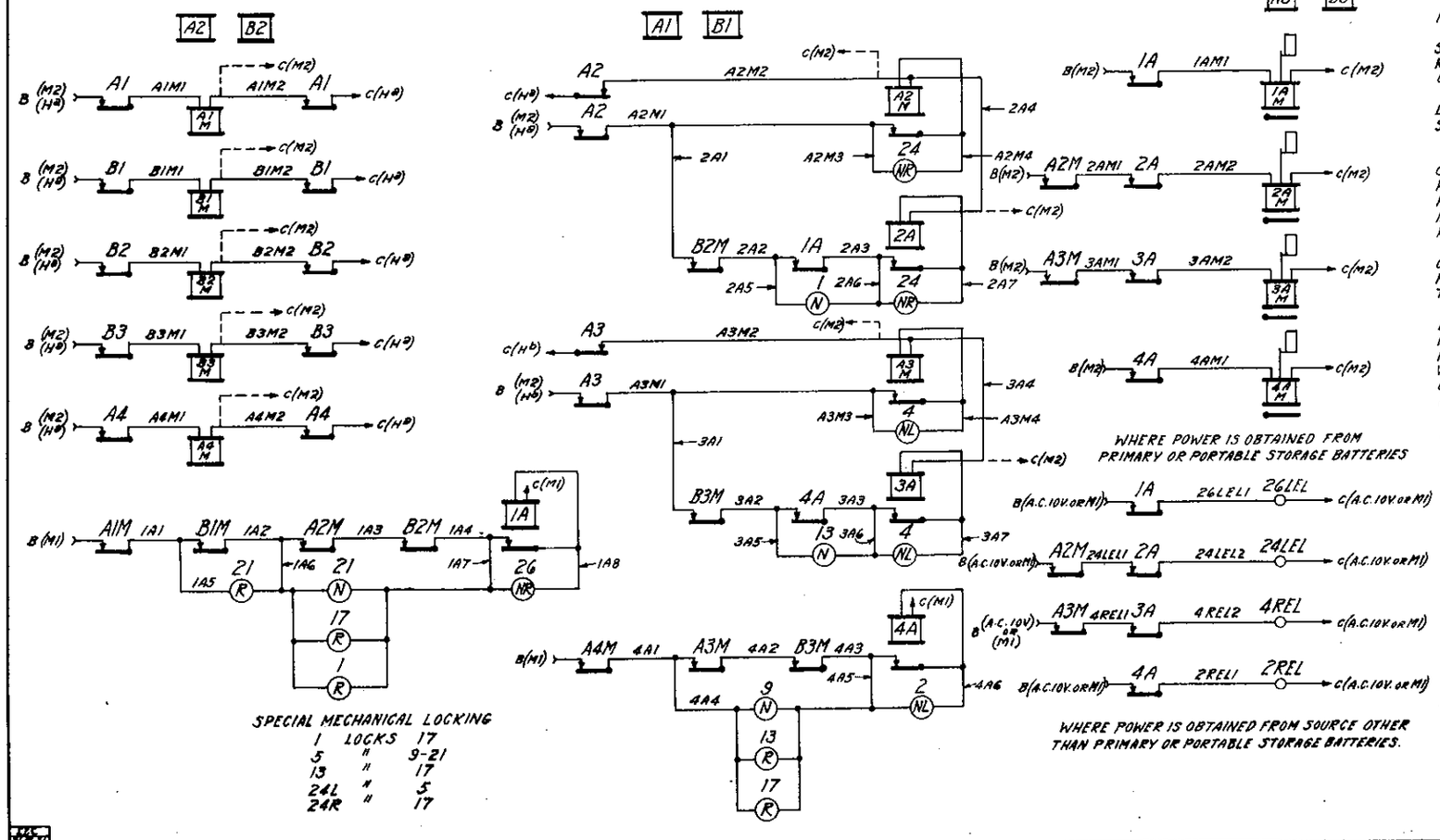

NOTE:-

IN AUTOMATIC TERRITORY WHEN SECOND ARM OF HIGH SIGNAL IS DISPLAYED AT 45° L.Q. THE TRACK INDICATING RELAY SHALL INCLUDE ONLY THE FIRST SECTION IN ADVANCE OF THE HOME SIGNAL.

ADDITIONAL TRACK SECTIONS MAY BE INSTALLED WHERE LOCAL TRAFFIC CONDITIONS REQUIRE QUICKER RELEASE OF SWITCHES.

TRACKS ARE ARBITRARILY NUMBERED.

IT SHOULD BE NOTED THAT THE INDICATING RELAY CONTROL IS CARRIED THROUGH ALL TRACK SECTIONS TO THE HOLDING SIGNAL FOR A CONFLICTING MOVEMENT WHERE HIGH OR RESTRICTED SPEED SIGNALS ARE INVOLVED. FOR ILLUSTRATION COMPARE THE CONTROL CIRCUIT FOR RELAY 1A WITH THAT FOR 4A.

WHERE A CROSSOVER MOVEMENT CAN BE MADE ONLY ON A SLOW SPEED SIGNAL (SEMI-AUTOMATIC) THE CONTROL NEED NOT BE TAKEN BEYOND THE SECTION THAT INCLUDES THE FOULING POINT.

ENERGY FOR REPEATING RELAYS SHALL BE TAKEN FROM BATTERY M2 WHEN INSTRUMENT REPEATED IS LOCATED INSIDE THE CABIN AND FROM NEAREST H BATTERY WHEN INSTRUMENT REPEATED IS LOCATED OUTSIDE THE CABIN. WHEN INSTRUMENT REPEATED IS LOCATED INSIDE OF CABIN, THE REPEATING RELAY SHALL GO DIRECT TO COMMON AS SHOWN DOTTED.

REPEATING INDICATOR OR INDICATION LIGHT MAY BE PROVIDED TO REPEAT RELAYS A2M & A3M IF SO DESIRED.

FOR POSITION LIGHT SIGNALS.

REVISIONS.

1-29-25. LOWER QUADRANT ADDED TO SIGNALS 2R, 4R, 24L & 26L.
APPROVED:

REDRAWN FROM PLAN S 861, SH. 1 DATED 12-13-24.

SHEET 1 OF 2

S-861

PENNSYLVANIA RAILROAD SYSTEM

TYPICAL CONTROL CIRCUITS

FOR TRACK INDICATING RELAYS

OFFICE OF CHIEF SIGNAL ENGINEER, PHILA., PA., JAN. 20, 1925.

NOT TO SCALE

Approved

Chief Signal Engineer

Approved

Chief Engineer

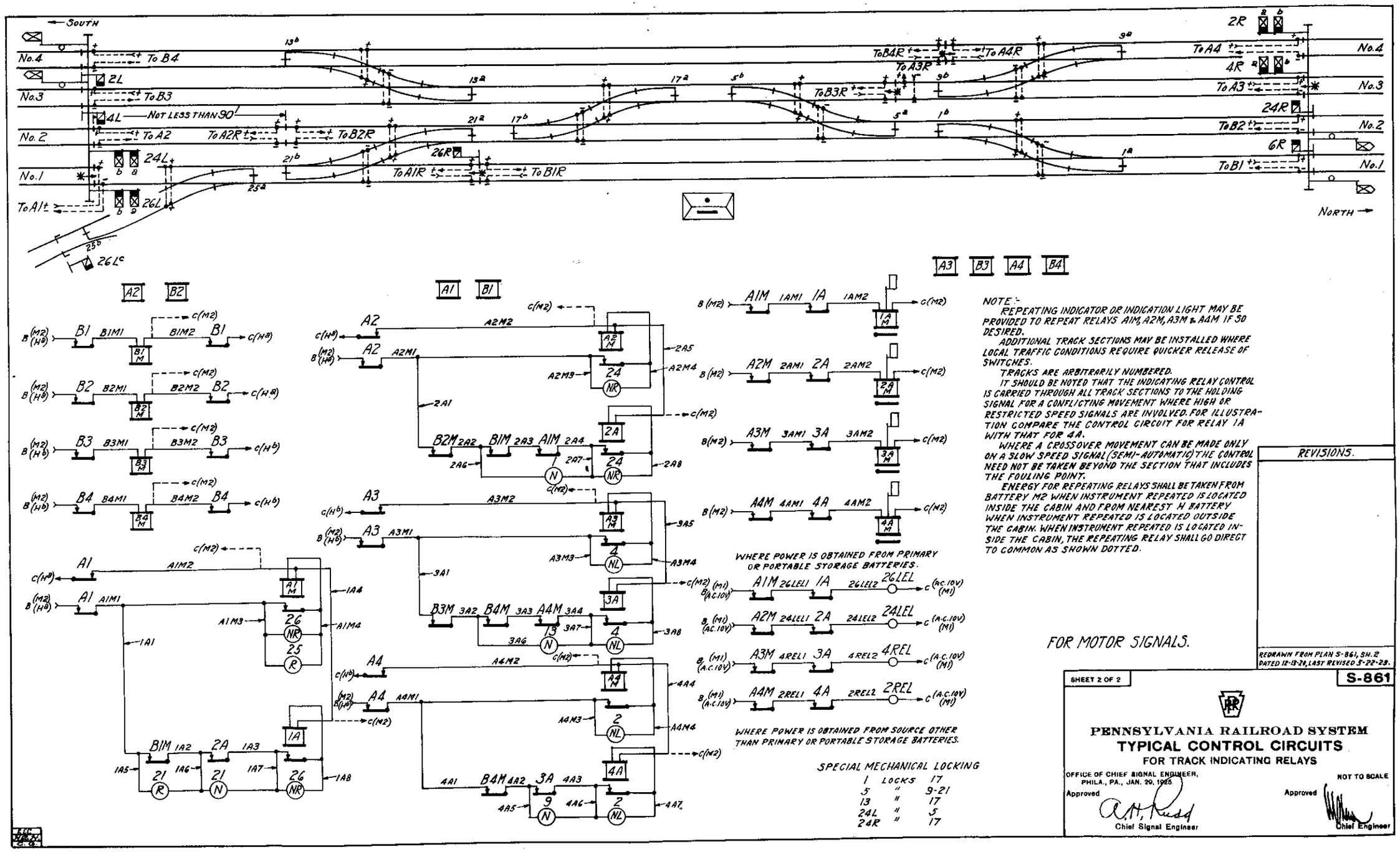

NOTE:-

REPEATING INDICATOR OR INDICATION LIGHT MAY BE PROVIDED TO REPEAT RELAYS A1M, A2M, A3M & A4M IF SO DESIRED.

ADDITIONAL TRACK SECTIONS MAY BE INSTALLED WHERE LOCAL TRAFFIC CONDITIONS REQUIRE QUICKER RELEASE OF SWITCHES.

TRACKS ARE ARBITRARILY NUMBERED.

IT SHOULD BE NOTED THAT THE INDICATING RELAY CONTROL IS CARRIED THROUGH ALL TRACK SECTIONS TO THE HOLDING SIGNAL FOR A CONFLICTING MOVEMENT WHERE HIGH OR RESTRICTED SPEED SIGNALS ARE INVOLVED. FOR ILLUSTRATION COMPARE THE CONTROL CIRCUIT FOR RELAY 1A WITH THAT FOR 4A.

WHERE A CROSSOVER MOVEMENT CAN BE MADE ONLY ON A SLOW SPEED SIGNAL (SEMI-AUTOMATIC) THE CONTROL NEED NOT BE TAKEN BEYOND THE SECTION THAT INCLUDES THE FOULING POINT.

ENERGY FOR REPEATING RELAYS SHALL BE TAKEN FROM BATTERY M2 WHEN INSTRUMENT REPEATED IS LOCATED INSIDE THE CABIN AND FROM NEAREST H BATTERY WHEN INSTRUMENT REPEATED IS LOCATED OUTSIDE THE CABIN. WHEN INSTRUMENT REPEATED IS LOCATED INSIDE THE CABIN, THE REPEATING RELAY SHALL GO DIRECT TO COMMON AS SHOWN DOTTED.

FOR MOTOR SIGNALS.

REVISIONS.

REDRAWN FROM PLAN S-861, SH. 2 DATED 12-13-24, LAST REVISED 5-22-28.

SHEET 2 OF 2

S-861

PENNSYLVANIA RAILROAD SYSTEM

TYPICAL CONTROL CIRCUITS

FOR TRACK INDICATING RELAYS

OFFICE OF CHIEF SIGNAL ENGINEER, PHILA., PA., JAN. 29, 1925

NOT TO SCALE

Approved

Chief Signal Engineer

Approved

Chief Engineer

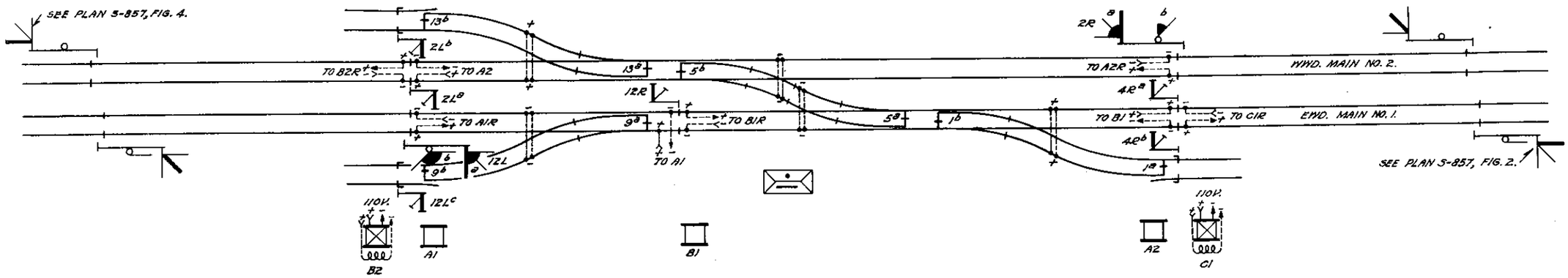

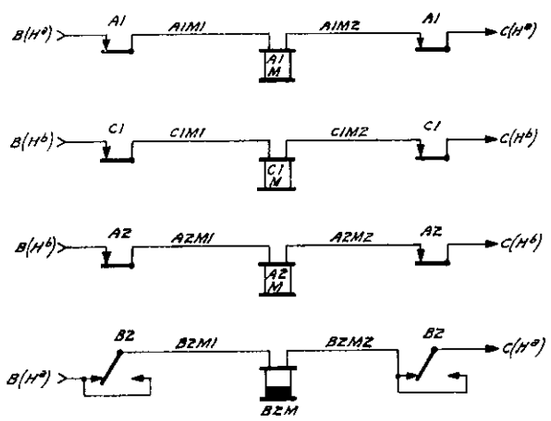

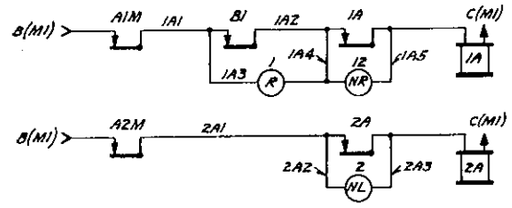

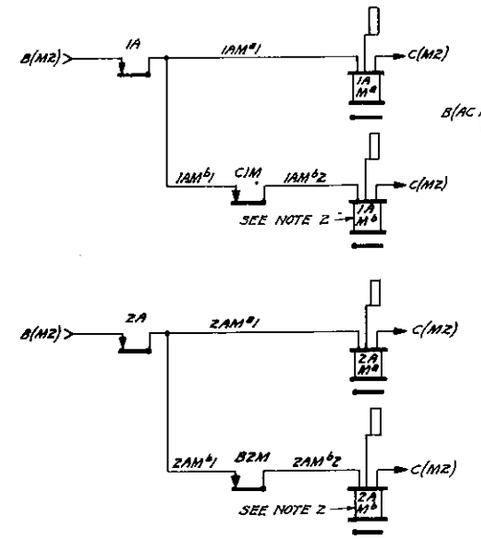

WHERE POWER IS OBTAINED FROM PRIMARY OR PORTABLE STORAGE BATTERIES.

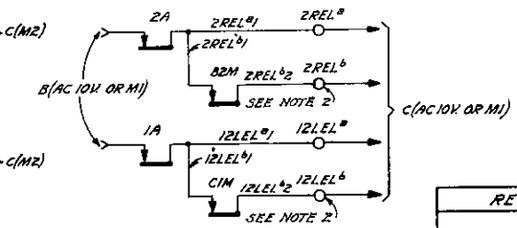

WHERE POWER IS OBTAINED FROM SOURCE OTHER THAN PRIMARY OR PORTABLE STORAGE BATTERIES.

FOR ARRANGEMENT WHERE AUTOMATIC BLOCK SIGNAL IS LOCATED BEYOND INTERLOCKING LIMITS.

NOTE:—
1. TRACKS ARE ARBITRARILY NUMBERED.
2. THE PROVISION OF INDICATORS 1AMb, 2AMb OR INDICATION LIGHTS 2RELb AND 12LELb IS OPTIONABLE.

REVISIONS

4-21-28. 1A & 2A FORMERLY CONTROLLED OVER C1 & B2M RESPECTIVELY AND 1AMb, 2AMb, 2RELb & 12LELb ADDED.
APPROVED: A.H. Rudd

REDRAWN FROM PLAN S-861, SH. 3, DATED 9-9-26.

SHEET 3 OF 3

S-861

THE PENNSYLVANIA RAILROAD
TYPICAL
CONTROL CIRCUITS FOR TRACK INDICATING RELAYS

OFFICE OF CHIEF SIGNAL ENGINEER, PHILA., PA., APRIL 21, 1928.

NOT TO SCALE

Approved A.H. Rudd
Chief Signal Engineer

Approved
Chief Engineer

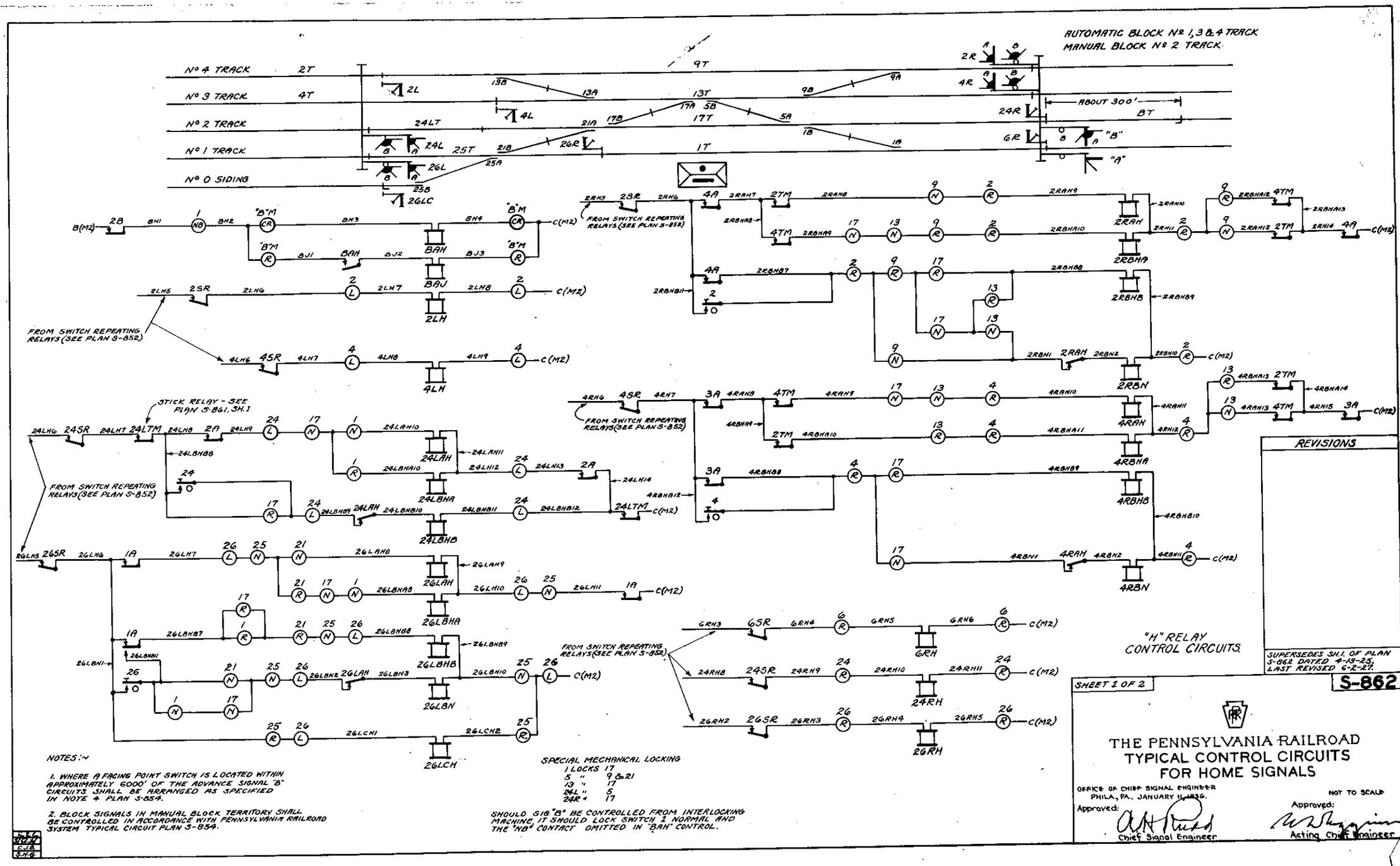

NOTES:-

1. WHERE A FACING POINT SWITCH IS LOCATED WITHIN APPROXIMATELY 6000' OF THE ADVANCE SIGNAL "B" CIRCUITS SHALL BE ARRANGED AS SPECIFIED IN NOTE 4 PLAN S-854.

2. BLOCK SIGNALS IN MANUAL BLOCK TERRITORY SHALL BE CONTROLLED IN ACCORDANCE WITH PENNSYLVANIA RAILROAD SYSTEM TYPICAL CIRCUIT PLAN S-854.

SPECIAL MECHANICAL LOCKING

1	LOCKS	17
5	"	9 & 21
13	"	17
24L	"	5
24R	"	17

SHOULD SIG. "B" BE CONTROLLED FROM INTERLOCKING MACHINE, IT SHOULD LOCK SWITCH 1 NORMAL AND THE "NB" CONTACT OMITTED IN "BAH" CONTROL.

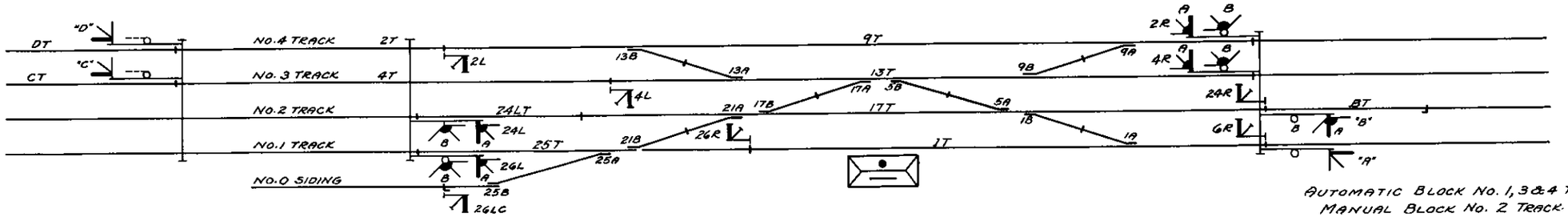

AUTOMATIC BLOCK NO. 1, 3 & 4 TRACK.
MANUAL BLOCK NO. 2 TRACK.

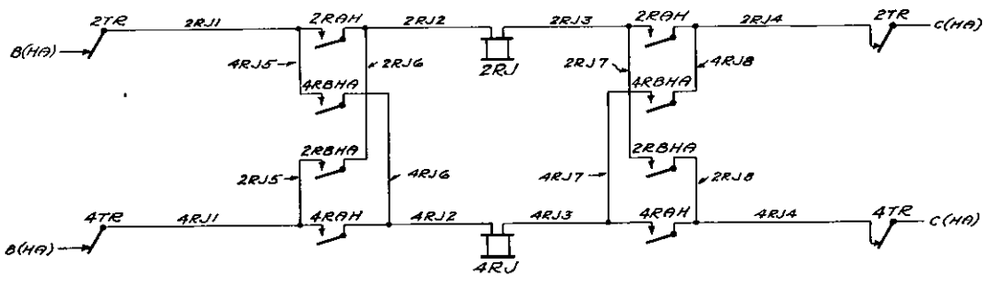

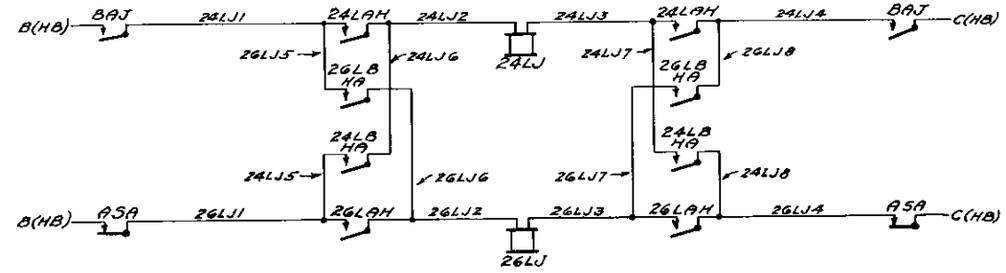

TWO BLOCK TERRITORY.

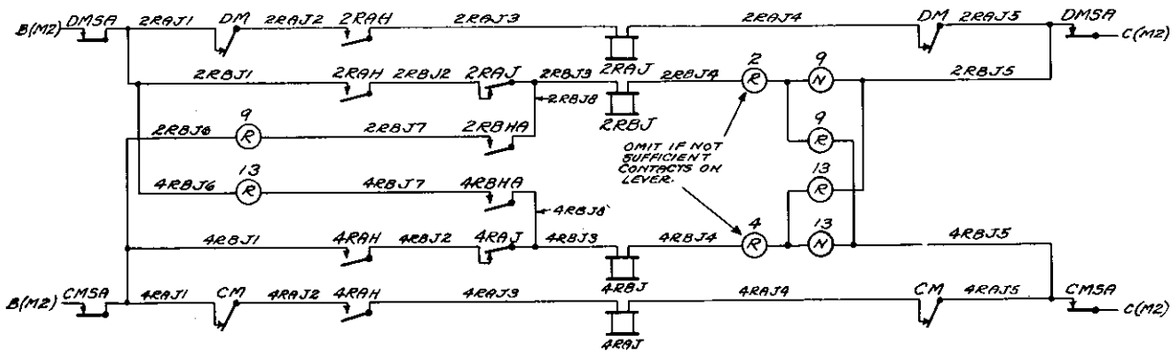

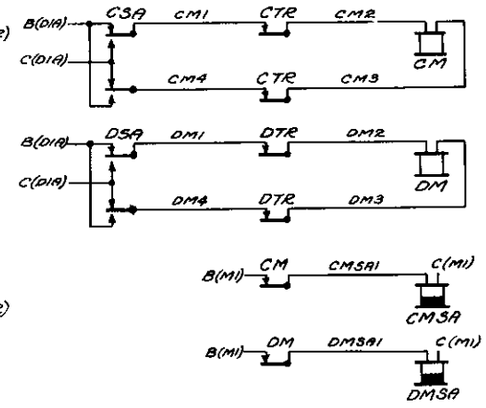

CLEAR "J" RELAY CONTROL CIRCUIT

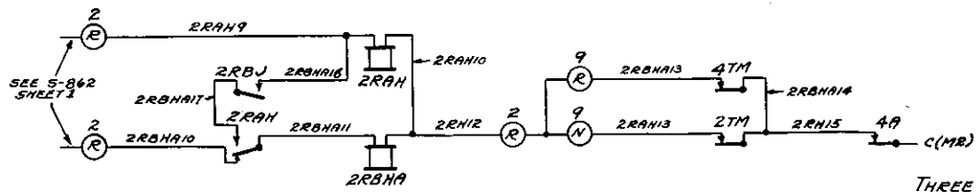

THREE BLOCK TERRITORY.

REVISIONS

SUPERSEDES SHEETS 2 & 3 OF PLAN S-862 DATED 12-13-23 LAST REVISED 4-13-25 & SHEET 4 DATED 4-20-28, LAST REVISED 4-20-28

SHEET 2 OF 2

S-862

THE PENNSYLVANIA RAILROAD
TYPICAL
CONTROL CIRCUITS FOR HOME SIGNALS

OFFICE OF CHIEF SIGNAL ENGINEER
PHILA., PA., JANUARY 11, 1936.

NOT TO SCALE

Approved: Chief Signal Engineer.

Approved: Acting Chief Engineer.

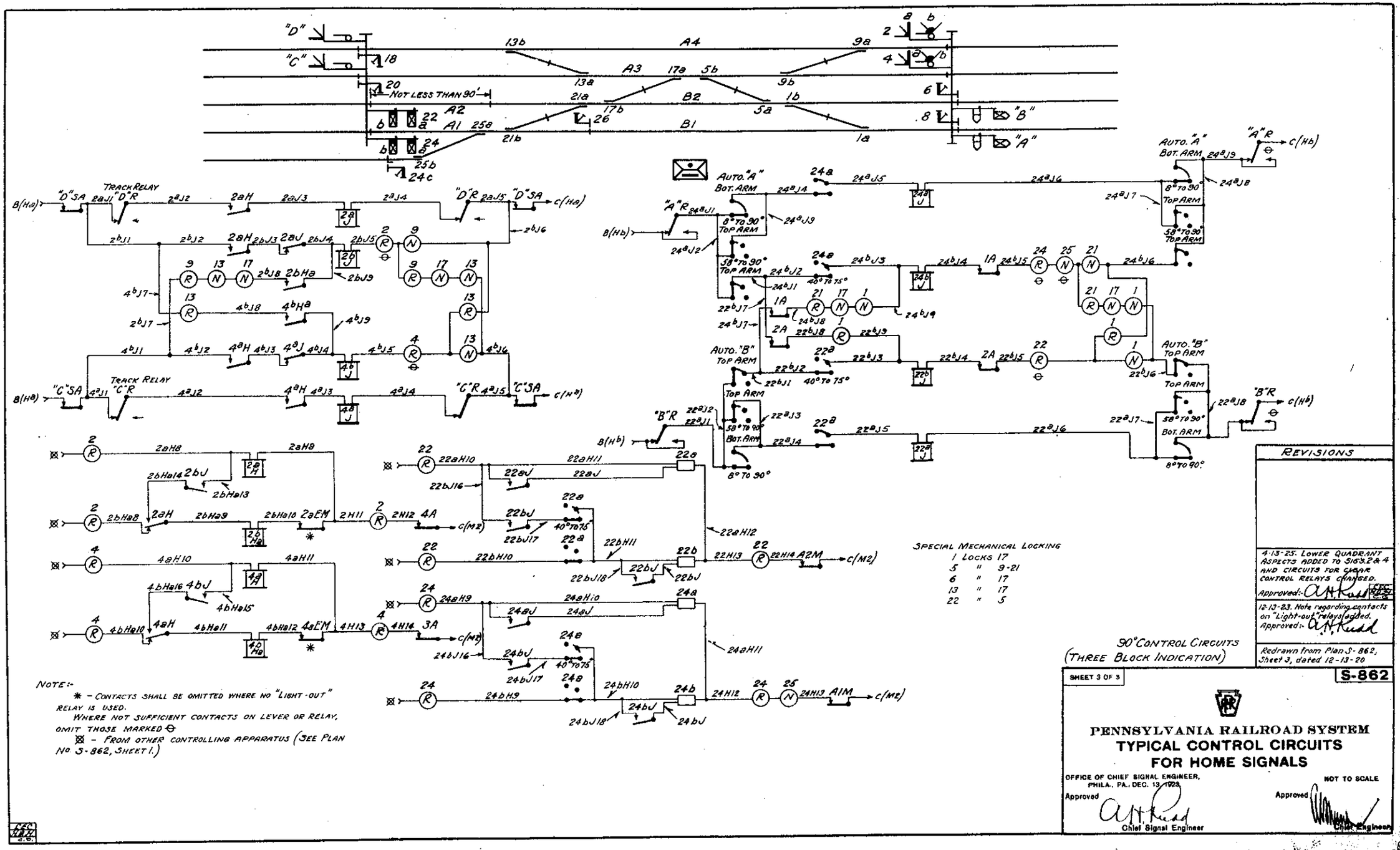
"D"
"C"
NOT LESS THAN 90'
A4
A3
A2
A1
B2
B1
"B"
"A"
TRACK RELAY
"D"R
"C"R
AUTO. "A" BOT. ARM
8° TO 90° TOP ARM
58° TO 90° TOP ARM
40° TO 75°
AUTO. "B" TOP ARM
TOP ARM
58° TO 90° BOT. ARM
8° TO 90°
"A"R
"B"R
c(Ha)
c(Hb)
c(Ma)
c(Mb)
c(M2)
c(M3)
c(M4)
SPECIAL MECHANICAL LOCKING
1 LOCKS 17
5 " 9-21
6 " 17
13 " 17
22 " 5
NOTE:-
* - CONTACTS SHALL BE OMITTED WHERE NO "LIGHT-OUT" RELAY IS USED.
WHERE NOT SUFFICIENT CONTACTS ON LEVER OR RELAY, OMIT THOSE MARKED ⊖
⊠ - FROM OTHER CONTROLLING APPARATUS (SEE PLAN No. S-862, SHEET 1.)
90° CONTROL CIRCUITS
(THREE BLOCK INDICATION)
REVISIONS
4-13-25. LOWER QUADRANT ASPECTS ADDED TO S163.2 & 4 AND CIRCUITS FOR CLEAR CONTROL RELAYS CHANGED.
Approved:-
12-13-23. Note regarding contacts on "Light-out" relays added.
Approved:-
Redrawn from Plan S-862, Sheet 3, dated 12-13-20
SHEET 3 OF 3
S-862
PENNSYLVANIA RAILROAD SYSTEM
TYPICAL CONTROL CIRCUITS
FOR HOME SIGNALS
OFFICE OF CHIEF SIGNAL ENGINEER,
PHILA., PA., DEC. 13, 1923.
NOT TO SCALE
Approved
Chief Signal Engineer
Approved
Chief Engineer

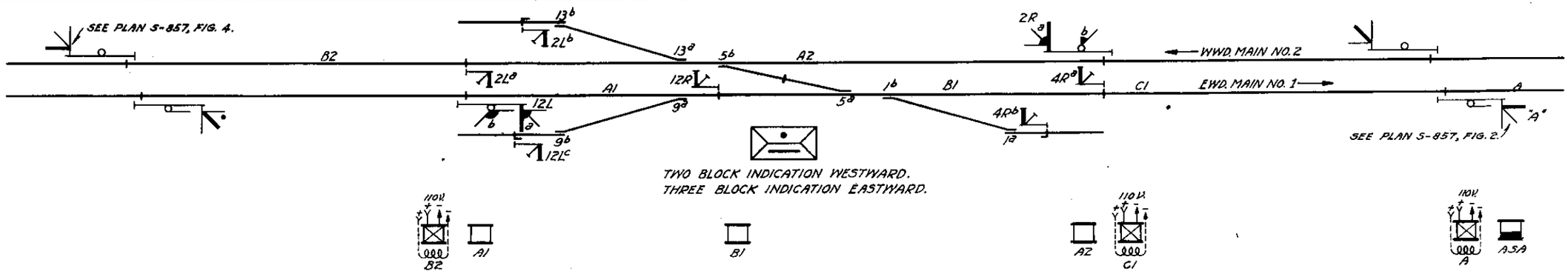

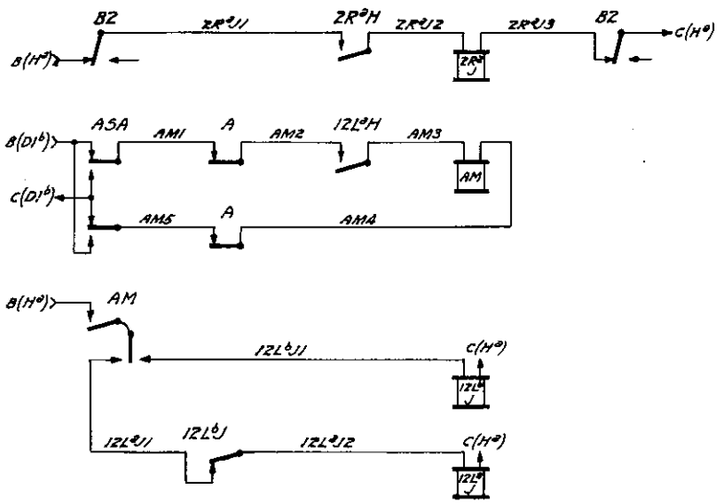

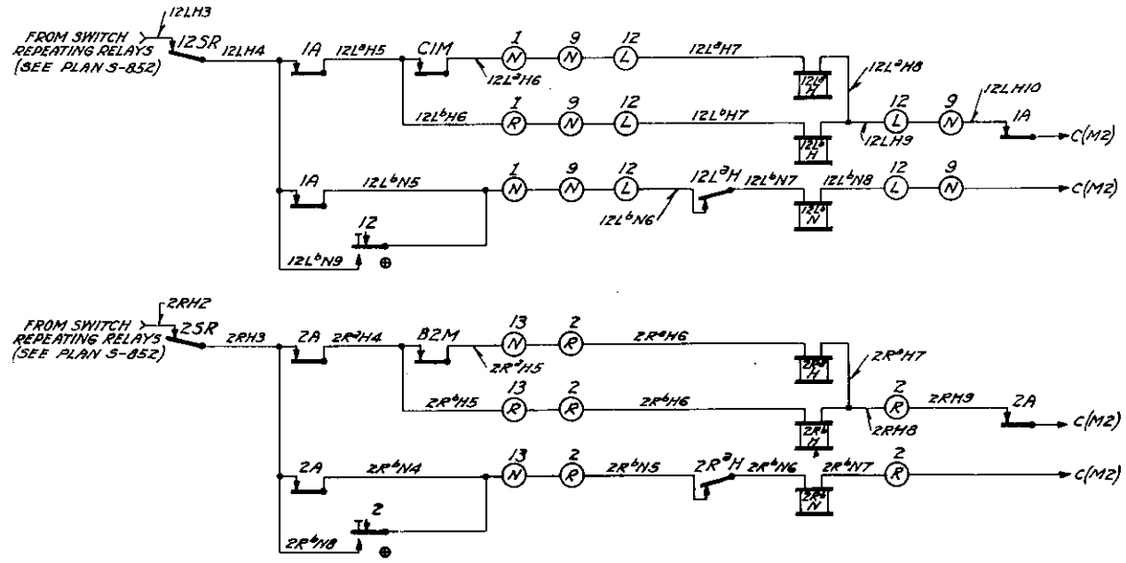

NOTE:-
1. CONTROL CIRCUITS FOR TRACK REPEATING AND TRACK INDICATING RELAYS SHALL BE IN ACCORDANCE WITH PLAN S-861, SHEET 3.

CONTROL CIRCUITS FOR HIGH SIGNALS WHERE AUTOMATIC BLOCK SIGNAL IS LOCATED BEYOND INTERLOCKING LIMITS.

REVISIONS.

4-20-28. H CONTROLS ADDED.
APPROVED. A.H. Rudd

REDRAWN FROM PLAN S-862, SH. 4, DATED 9-9-26.

SHEET 4 OF 4

S-862

THE PENNSYLVANIA RAILROAD
TYPICAL
CONTROL CIRCUITS FOR HOME SIGNALS

OFFICE OF CHIEF SIGNAL ENGINEER, PHILA., PA., APRIL 20, 1928.

NOT TO SCALE

Approved A.H. Rudd Chief Signal Engineer

Approved J. Pilliner Chief Engineer

U.S.&S. CO. - TYPE "T2"

LOW VOLTAGE

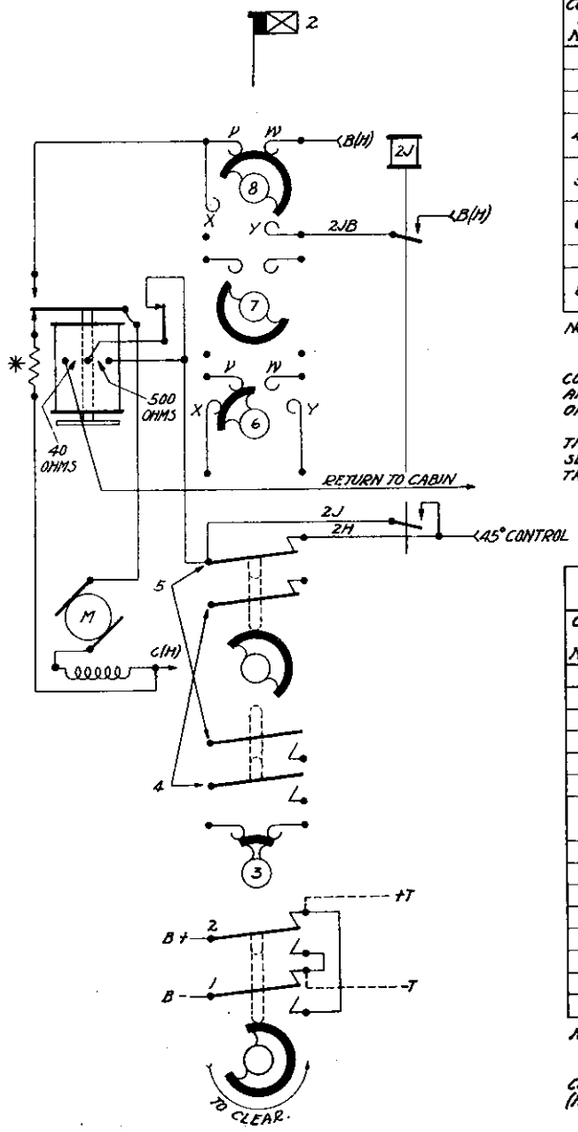

CIRCUIT BREAKER OPERATION
U.S. & S. CO. - TYPE "T2"

CONTACT SPACE NUMBER	GOING TO CLEAR CLOSES	GOING TO CLEAR OPENS	GOING TO STOP CLOSES	GOING TO STOP OPENS	REMARKS
1	POLE CHANGER OPERATES AT 85°				
2					
3		5°	2°		INDICATION.
4 TOP		50°	47°		
4 BOTTOM	40°			37°	CLEAR CONTROL RELAY.
5 TOP		50°	47°		45° HOLDING.
5 BOTTOM	40°			37°	DISTANT SIGNAL CONTROL.
6 VX		5°	2°		CALLING-ON CONTROL.
6 WY	88°			85°	DISTANT SIGNAL CONTROL.
7	40° (OR 88°)			37° (OR 85°)	DISTANT SIGNAL RETURN.
8 VW		44°	41°		45° OPERATING.
8 XY	42°	88°	85°	39°	90° OPERATING.

NOTE:-

FOR WIRING 2 POSITION SIGNALS - 0°-45°, OMIT WIRES "2J" AND "2JB."

FOR WIRING 2 POSITION SIGNALS - 0°-90°, OMIT WIRES "2J" AND "2JB," CONNECT WIRE "2H" TO UPPER LEFT HAND TERMINAL OF CONTACT 5 AND TAKE BATTERY (H) DIRECT ON BOTH RIGHT HAND SPRINGS OF SEGMENT 8.

CIRCUIT CONTROLLER SHAFT MOVES 3 TIMES THE SPEED OF THE SEMAPHORE IN THE OPPOSITE DIRECTION; HENCE, 90° OF SEMAPHORE IS EQUIVALENT TO 270° MOVEMENT OF CIRCUIT CONTROLLER SEGMENT.

✳ = 2 OHMS FOR HIGH SIGNALS. 7 OHMS FOR DWARF SIGNALS.

Ø GOING TO CLEAR - CLOSES AT 40° - OPENS AT 75°.
GOING TO STOP - CLOSES AT 72° - OPENS AT 37°.

CIRCUIT BREAKER OPERATION
G. R. S. CO. - TYPE "2A"

CONTACT SPACE NUMBER	GOING TO CLEAR CLOSES	GOING TO CLEAR OPENS	GOING TO STOP CLOSES	GOING TO STOP OPENS	REMARKS
1	POLE CHANGER OPERATES AT 85°				SNAP.
3	40°			40°	CLEAR CONTROL RELAY.
5		43°	43°		45° OPERATING.
7	40°	88°	88°	40°	90° OPERATING.
9		47°	47°		45° HOLDING.
11		5°	5°		SLIP CONTACT SHUNT.
13	OPENS AFTER 2° ROTATION.		CLOSES AFTER 2° ROTATION.		SLIP CONTACT - SHUNTS HIGH RESISTANCE COIL.
2	POLE CHANGER OPERATES AT 85°				SNAP.
4	85°			85°	DISTANT SIGNAL CONTROL.
6	40° (OR 85°)			40° (OR 85°)	DISTANT SIGNAL RETURN.
8	40°			40°	DISTANT SIGNAL CONTROL.
10		5°	5°		INDICATION.
12		5°	5°		CALLING-ON CONTROL.
14	55°	30°	30°	55°	SNUB CONTACT.

NOTE:-

FOR WIRING 2 POSITION SIGNALS - 0°-45°, OMIT WIRES "2J" AND "2JB."

FOR WIRING 2 POSITION SIGNALS - 0°-90°, OMIT WIRES "2J" AND "2JB," CONNECT WIRE "2H" TO LOWER CONTACT SPRING AND CONNECT BATTERY (H) DIRECT TO BOTH UPPER CONTACT SPRINGS 5 AND 7.

⊠ = SNUB RESISTANCE - 3 OHMS.

Ø GOING TO CLEAR - CLOSES AT 40° - OPENS AT 75°.
GOING TO STOP - CLOSES AT 75° - OPENS AT 40°

G. R. S. CO. - TYPE "2A"

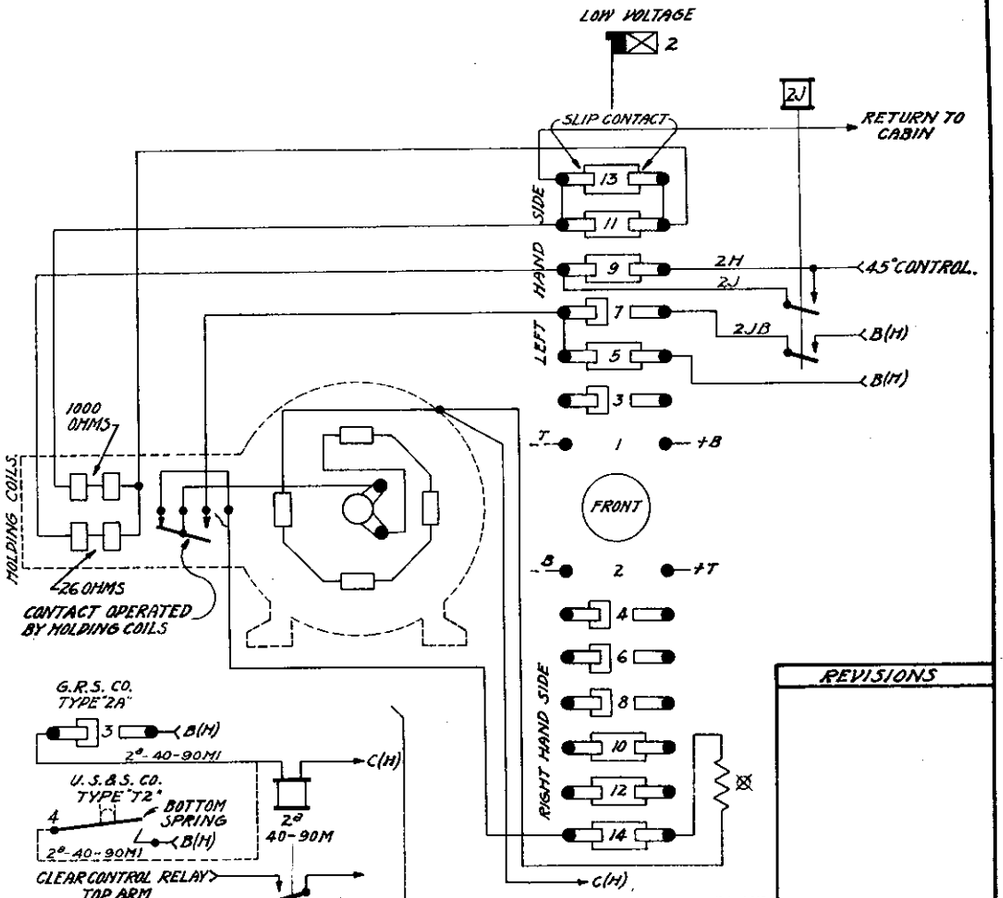

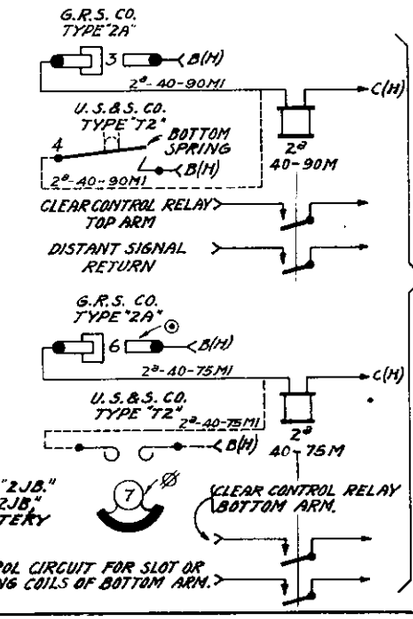

ARRANGEMENT OF CIRCUIT CLOSERS AND CIRCUITS ON TOP ARM WHERE THREE BLOCK INDICATION IS INSTALLED.

BACK CONTACTS OF RELAY "2ª 40-75M" AND "2ª 40-90M" SHALL BE INCLUDED IN SIGNAL LOCK CIRCUITS.

REVISIONS

REDRAWN FROM SHEETS 1, 2, AND 3 OF PLAN S-863 DATED 7-7-21.

1 SHEET

S-863

THE PENNSYLVANIA RAILROAD
STANDARD
LOCAL CIRCUITS FOR MOTOR INTERLOCKING & BLOCK SIGNALS

OFFICE OF CHIEF SIGNAL ENGINEER
PHILA., PA., MAY 19, 1927

NOT TO SCALE

Approved
Chief Signal Engineer

Approved
Chief Engineer

F.E.G.
R.D.Z.
W.K.P.

U.S. & S. CO. - TYPE "T2"
LOW VOLTAGE

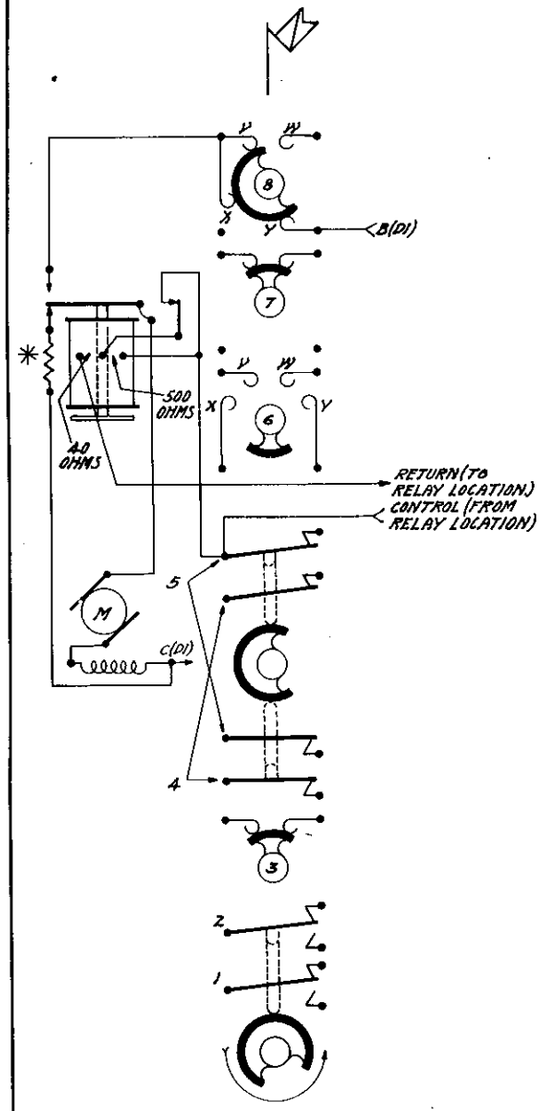

CIRCUIT BREAKER OPERATION
U.S. & S. CO. - TYPE "T2"

CONTACT SPACE NUMBER	GOING TO CLEAR		GOING TO CAUTION		REMARKS
	CLOSES	OPENS	CLOSES	OPENS	
1					
2					
3		50°	47°		INDICATION.
4 TOP					
4 BOTTOM					
5 TOP					
5 BOTTOM					
6 VX					
6 WY					
7		50°	47°		ON TOP ARM (SECOND ARM CONTROL).
8 VW					
8 XY		88°	85°		90° OPERATING.

NOTE:-
CIRCUIT CONTROLLER SHAFT MOVES 3 TIMES THE SPEED OF THE SEMAPHORE IN THE OPPOSITE DIRECTION; HENCE, 90° OF SEMAPHORE IS EQUIVALENT TO 270° MOVEMENT OF CIRCUIT CONTROLLER SEGMENT.
FOR TYPICAL ARRANGEMENT OF CONTROL CIRCUITS SEE PENNSYLVANIA RAILROAD TYPICAL CIRCUIT PLAN S-853. A COMPLETE ARRANGEMENT OF CIRCUITS SHOULD BE SHOWN ON THE DETAIL CIRCUIT PLAN FOR EACH INSTALLATION.

✳ 2 OHMS RESISTANCE.

CIRCUIT BREAKER OPERATION
G.R.S. CO.-TYPE "2A"

CONTACT SPACE NUMBER	GOING TO CLEAR		GOING TO CAUTION		REMARKS
	CLOSES	OPENS	CLOSES	OPENS	
1					
3					
5					
7		88°	88°		90° OPERATING.
9					
11		50°	50°		SLIP CONTACT SHUNT.
13	OPENS AFTER 2° ROTATION		CLOSES AFTER 2° ROTATION		SLIP CONTACT - SHUNTS HIGH RESISTANCE COIL.
2					
4		50°	50°		ON TOP ARM (SECOND ARM CONTROL).
6					
8					
10		50°	50°		INDICATION.
12					
14					

NOTE:-
FOR TYPICAL ARRANGEMENT OF CONTROL CIRCUITS SEE PENNSYLVANIA RAILROAD TYPICAL CIRCUIT PLAN S-853. A COMPLETE ARRANGEMENT OF CIRCUITS SHOULD BE SHOWN ON THE DETAIL CIRCUIT PLAN FOR EACH INSTALLATION.

⊠ SNUB RESISTANCE - 3 OHMS.

G.R.S. CO. - TYPE "2A"
LOW VOLTAGE

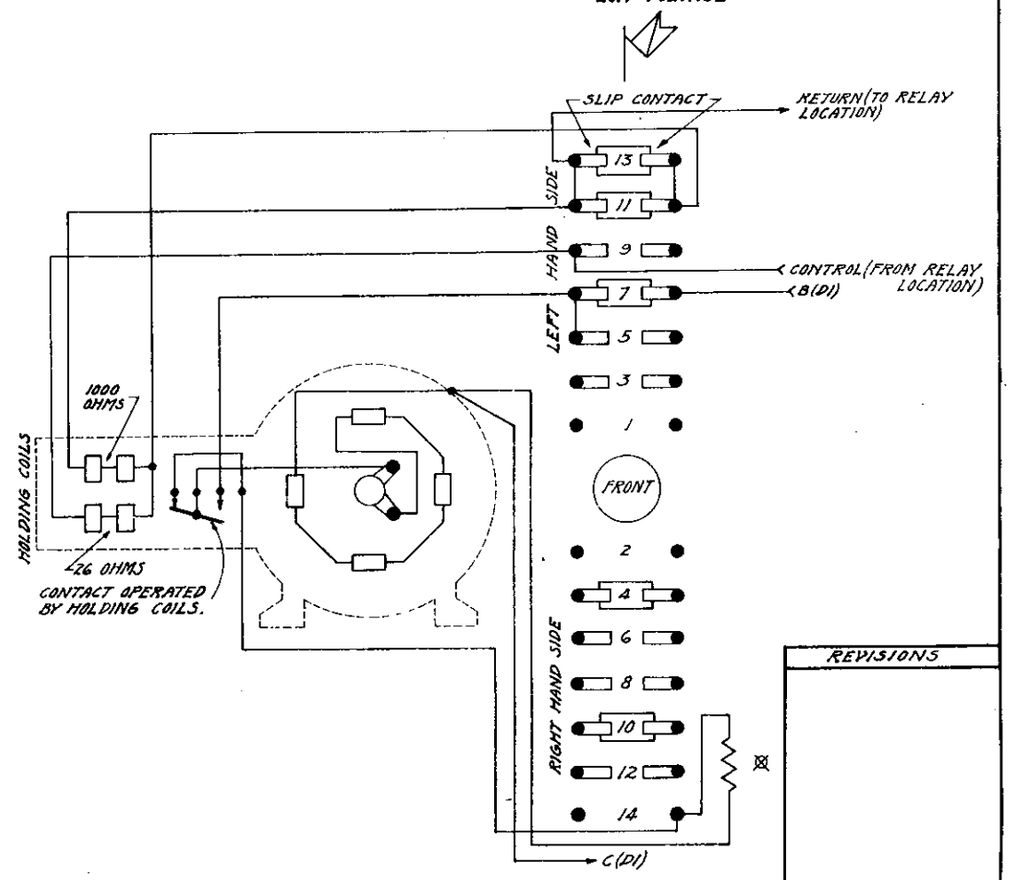

REVISIONS

REDRAWN FROM SHEETS 1 & 2 OF PLAN S-864. DATED 7-7-21.

1 SHEET

S-864

THE PENNSYLVANIA RAILROAD
STANDARD
LOCAL CIRCUITS FOR MOTOR DISTANT SIGNALS

OFFICE OF CHIEF SIGNAL ENGINEER, PHILA., PA., MAY 19, 1927

NOT TO SCALE

Approved A. H. Rudd Chief Signal Engineer

Approved J. Pullman Chief Engineer

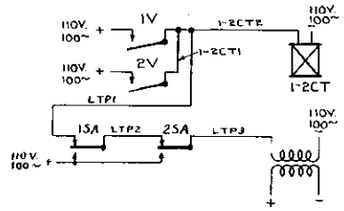

NORMALLY DEENERGIZED "V" RELAYS.
100 CYCLE CODE
100 CYCLE TRACK.
SEE PLAN S-883, FIGS. 2 & 4.
" " S-884, SH. 2.
FOR USE WHERE SPARE DEPENDENT FRONT & BACK CONTACT IS NOT AVAILABLE ON SLOW ACTING RELAYS, SHALL ALSO BE USED IN ALL CASES WHERE SEPARATE LIGHTING TRANSFORMER IS PROVIDED.

FIG 1

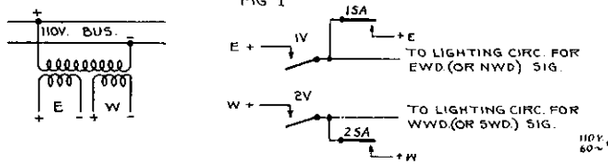

NORMALLY DEENERGIZED "V" RELAYS.
100 CYCLE CODE
100 CYCLE TRACK.

SEE PLAN S-883, FIGS. 1, 2, 3 & 4.
" " S-884, SH'S. 1 & 2.
FOR USE WHERE SPARE DEPENDENT FRONT & BACK CONTACT IS AVAILABLE ON SLOW ACTING RELAYS WHERE CIRCUITS ARE IN ACCORDANCE WITH S-883, FIGS. 2 & 4. AND S-884, SH. 2.- SEE SKETCH "A".

FIG. 2.

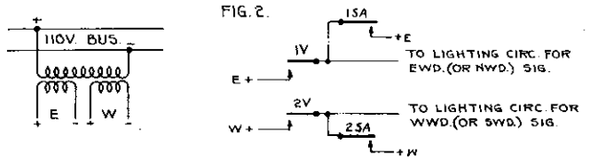

NORMALLY ENERGIZED "V" RELAYS.
100 CYCLE CODE
100 CYCLE CODERS
60 CYCLE TRACK
SEE PLAN S-883, FIGS. 11, 12, 13 & 14. } SEE SKETCH "B"
" " S-884, SH'S. 10, 11, 12, 15, 16 & 18. }

FIG. 3.

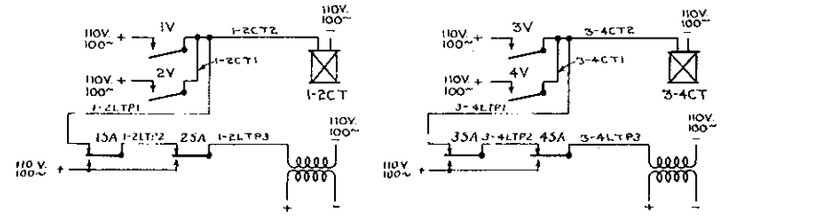

NORMALLY DEENERGIZED "V" RELAYS.
100 CYCLE CODE
100 CYCLE TRACK
SEE PLAN S-883, FIGS. 1, 2, 3 & 4.
" " S-884, SH'S. 1 & 2.

FIG. 4

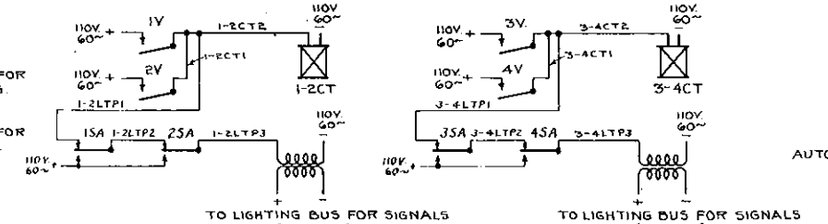

NORMALLY DEENERGIZED "V" RELAYS.
100 CYCLE CODE
60 CYCLE CODERS.
60 CYCLE TRACK.
SEE PLAN S-883, FIGS. 5, 6, 7 & 8.
" " S-884, SH'S. 4 & 6.

FIG. 5.

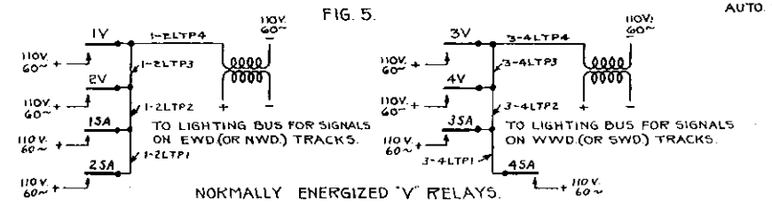

NORMALLY ENERGIZED "V" RELAYS.
100 CYCLE CODE
100 CYCLE CODERS
60 CYCLE TRACK
SEE PLAN S-883, FIGS. 11, 12, 13 & 14. } SEE SKETCH "B"
" " S-884, SH'S. 10, 11 & 12. }

FIG. 6.

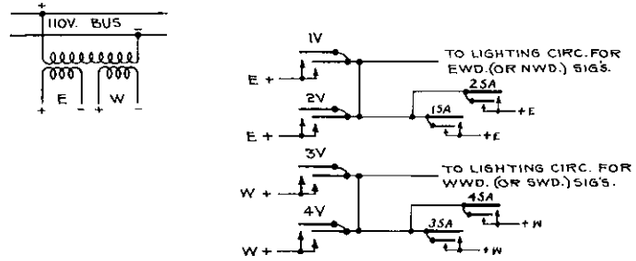

NORMALLY ENERGIZED "V" RELAYS.
100 CYCLE CODE
100 CYCLE TRACK (ELECTRIFIED TERRITORY)
SEE PLAN S-884, SH'S. 15, 16 & 18.

FIG. 7.

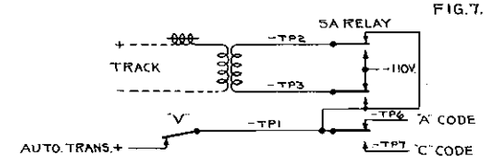

NORMALLY DEENERGIZED "V" RELAYS.
POLE-CHANGING CIRCUIT WHERE FIG. 2 IS USED.

SKETCH "A"

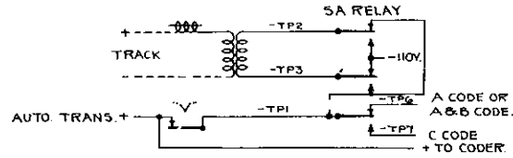

NORMALLY ENERGIZED "V" RELAYS.
POLE-CHANGING CIRCUIT WHERE FIG. 3 OR 6 IS USED.

SKETCH "B"

FOR USE IN CODED TRACK CIRCUIT TERRITORY.

NOTE:-
1. WHERE MORE THAN ONE TRACK IS SIGNALED IN A GIVEN DIRECTION ALL HIGH SIGNALS GOVERNING IN THAT DIRECTION SHALL BE APPROACH LIGHTED SIMULTANEOUSLY.
2. INTERLOCKING SIGNALS SHALL NOT BE APPROACH LIGHTED.

TWO TRACK ROAD.

FOUR TRACK ROAD.

REVISIONS.

5-11-37. SIGNALS LIGHTED WHEN BLOCK BEYOND SIGNAL IS OCCUPIED.

APPROVED: [illegible] H.G.H. P.L.S.

SUPERSEDES PLAN S-865, SHEETS 1 TO 7, DATED 2-27-24.

1 SHEET

S-865

THE PENNSYLVANIA RAILROAD
STANDARD
APPROACH LIGHTING CIRCUITS.

OFFICE OF ASS'T. CHIEF ENGINEER - SIGNALS
PHILA., PA., AUG. 17, 1932.

NOT TO SCALE.

Approved [illegible] Chief Signal Engineer

Approved [illegible] Chief Engineer.

H.G.H.
T.B.

NOTE:-

Approach Lighting may be used only:

For signals on single track lines and on double track lines where such double tracks are signaled for Eastward (or Northward) movements on one track and Westward (or Southward) movements on the other, and then only where tracks are occupied not more than one-fourth of the time if primary battery is used.

Approach lighting shall not be used for high signals on adjacent parallel tracks in the same direction.

For arrangement of terminals in terminal box, see Pennsylvania Railroad System Standard Plan No. S-858.

Each mast shall have separate negative wires.

Lighting circuits shall be so adjusted as to have uniform voltage at the lamps. The voltage shall be between the following limits:

	Maximum	Minimum	Recommended
High Signals - -	11.5 V.	11.0 V.	-
Dwarf Signals- -	5.0 V.	4.0 V.	4.2 V.or 4.3 V.

Lamps shall be in accordance with Pennsylvania Railroad System Standard Plan Basic No. S-483.

Signal wires and control relays have been numbered from arbitrary track number and correct number for the track which the signal governs shall be substituted. Where direction of traffic is North and South, substitute the letter "N" for "E" and "S" for "W" in line control circuits.

Control of distant signal relays ($1DJ^a$ and $1DJ^b$) shall be shown on the circuit plan of the interlocking. For typical arrangement, see Pennsylvania Railroad System Typical Circuit Plan No. S-853.

All crossovers, turnouts and derails between home and distant signals or between automatic signal and next signal in advance, shall be in accordance with Pennsylvania Railroad System Standard Plan Basic No. S-228, S-229, S-230, S-231, S-232 or S-233, and shall be insulated and bonded in accordance with Pennsylvania Railroad System Standard Plan No. S-803.

C.E.C.
H.A.H.

SHEET 1 OF 7

S-865

PENNSYLVANIA RAILROAD SYSTEM

TYPICAL APPROACH LIGHTING CIRCUITS

OFFICE OF CHIEF SIGNAL ENGINEER,
PHILA., PA., FEB. 27, 1924.

NOT TO SCALE

Approved

Chief Signal Engineer

Approved

Chief Engineer

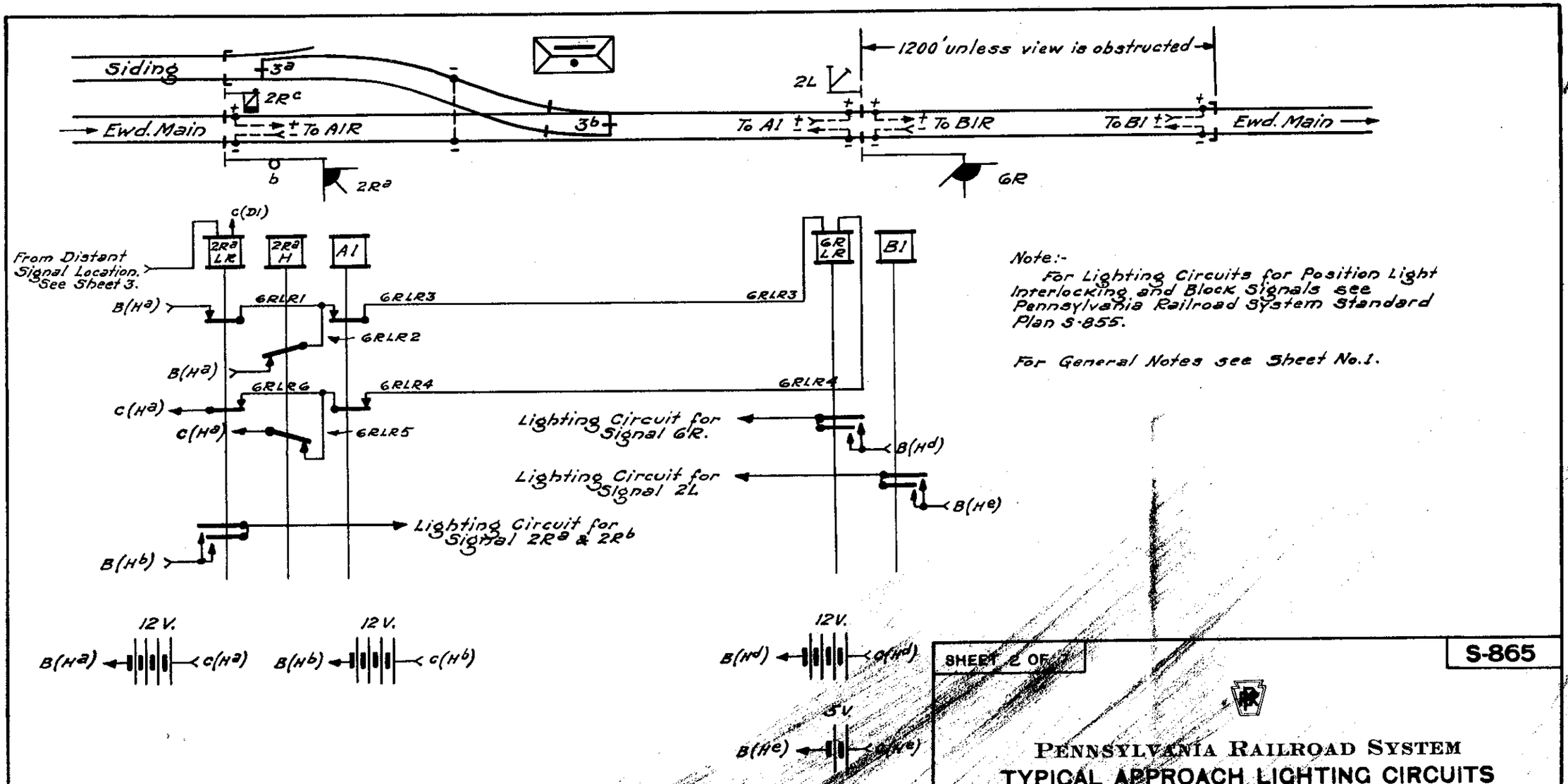

Note:-
For Lighting Circuits for Position Light Interlocking and Block Signals see Pennsylvania Railroad System Standard Plan S-855.

For General Notes see Sheet No. 1.

SHEET 2 OF 7

S-865

PENNSYLVANIA RAILROAD SYSTEM

TYPICAL APPROACH LIGHTING CIRCUITS

OFFICE OF CHIEF SIGNAL ENGINEER,
PHILA., PA., FEB. 27, 1924.

NOT TO SCALE

Approved
Chief Signal Engineer

Approved
Chief Engineer

F.E.C.
H.A.H.

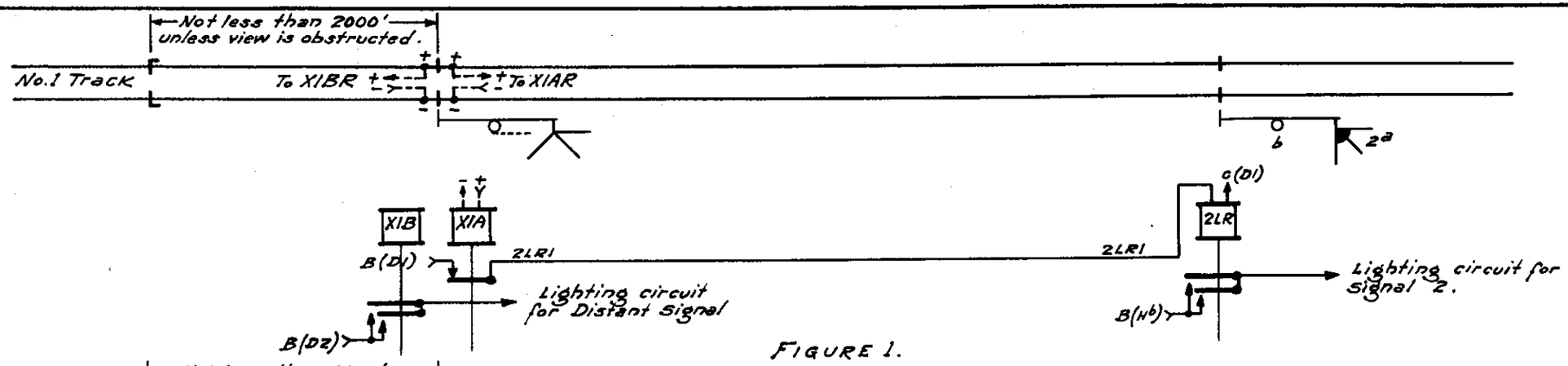

FIGURE 1.

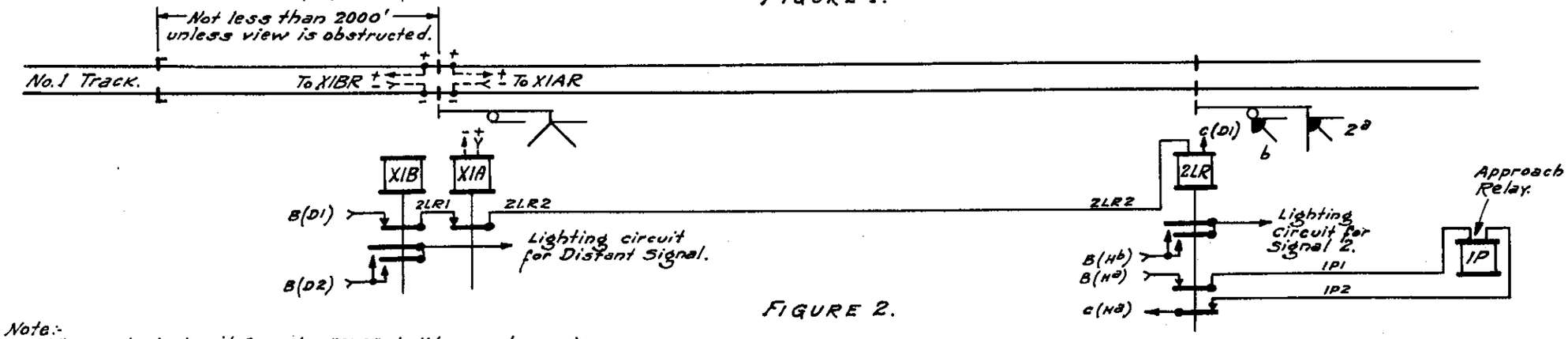

FIGURE 2.

Note:-
The control circuit for relay "2LR" shall be as shown in FIGURE 2 where either 90° position on second arm of Home Signal is dependent on "Light-out" relay, or where Approach Locking is installed. Where neither is used it shall be as shown in FIGURE 1.
For lighting circuits for Position Light Interlocking and Block signals see Pennsylvania Railroad System Standard Plan S-855.
For lighting circuits for Position Light Distant Signals see Pennsylvania Railroad System Standard Plan S-856.

For General Notes see Sheet 1.

CEC
H.G.H.

SHEET 3 OF 7

S-865

PENNSYLVANIA RAILROAD SYSTEM

TYPICAL APPROACH LIGHTING CIRCUITS

OFFICE OF CHIEF SIGNAL ENGINEER,
PHILA., PA., FEB. 27, 1924.

NOT TO SCALE

Approved

Chief Signal Engineer

Approved

Chief Engineer

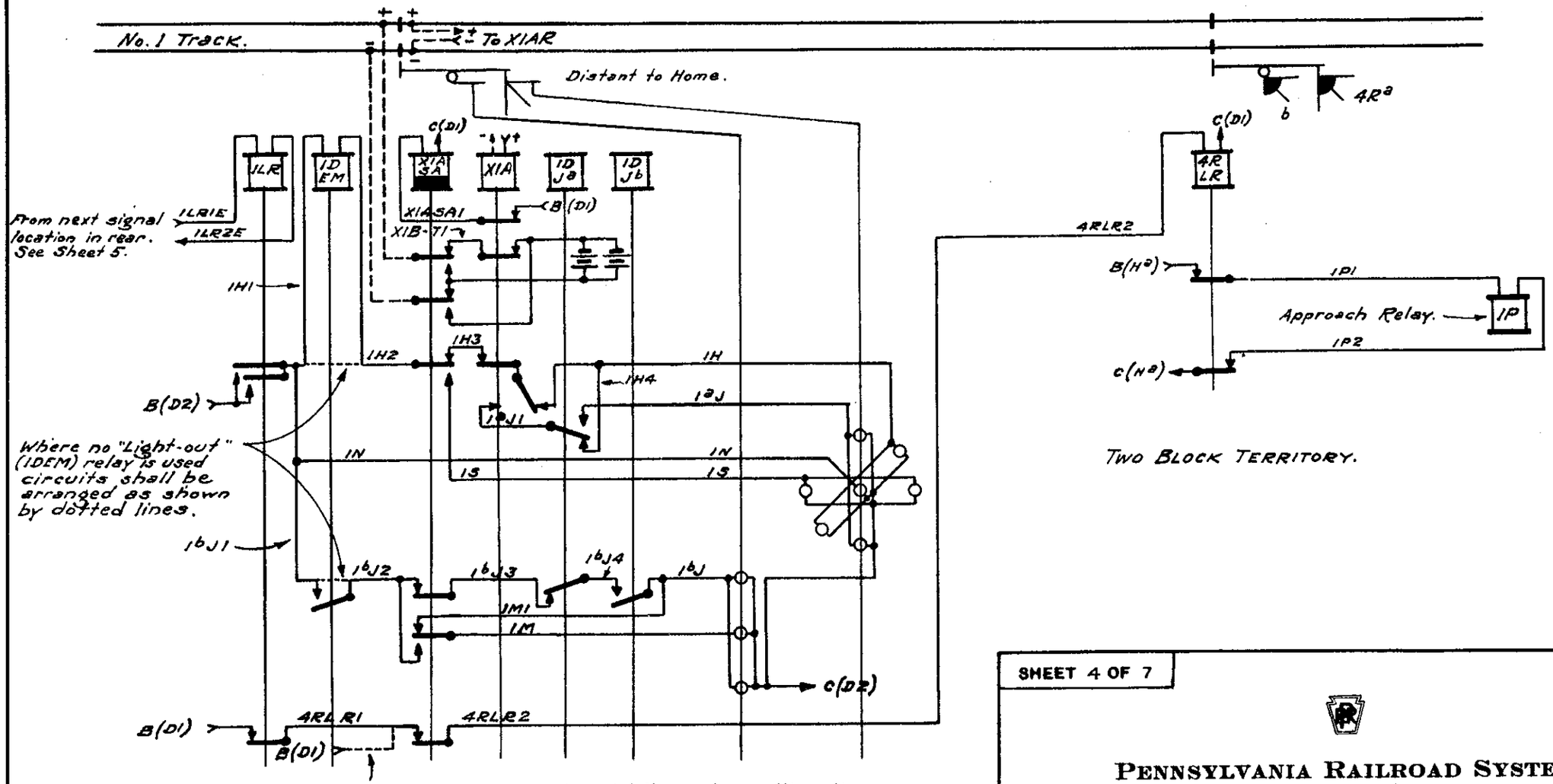

The control circuit for relay "4RLR" shall be as shown in solid lines where either the 90° position on second arm of Home Signal is dependent on "Light-out" relay, or where Approach Locking is installed. Where neither is used omit contact on relay "1LR" and arrange circuit as shown in dotted line.

For General Notes see Sheet 1.

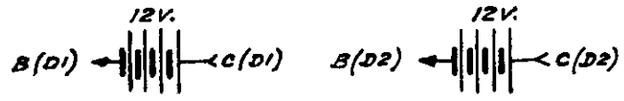

SHEET 4 OF 7

S-865

PENNSYLVANIA RAILROAD SYSTEM

TYPICAL APPROACH LIGHTING CIRCUITS

OFFICE OF CHIEF SIGNAL ENGINEER,
PHILA., PA., FEB. 27, 1924.

NOT TO SCALE

Approved

Chief Signal Engineer

Approved

Chief Engineer

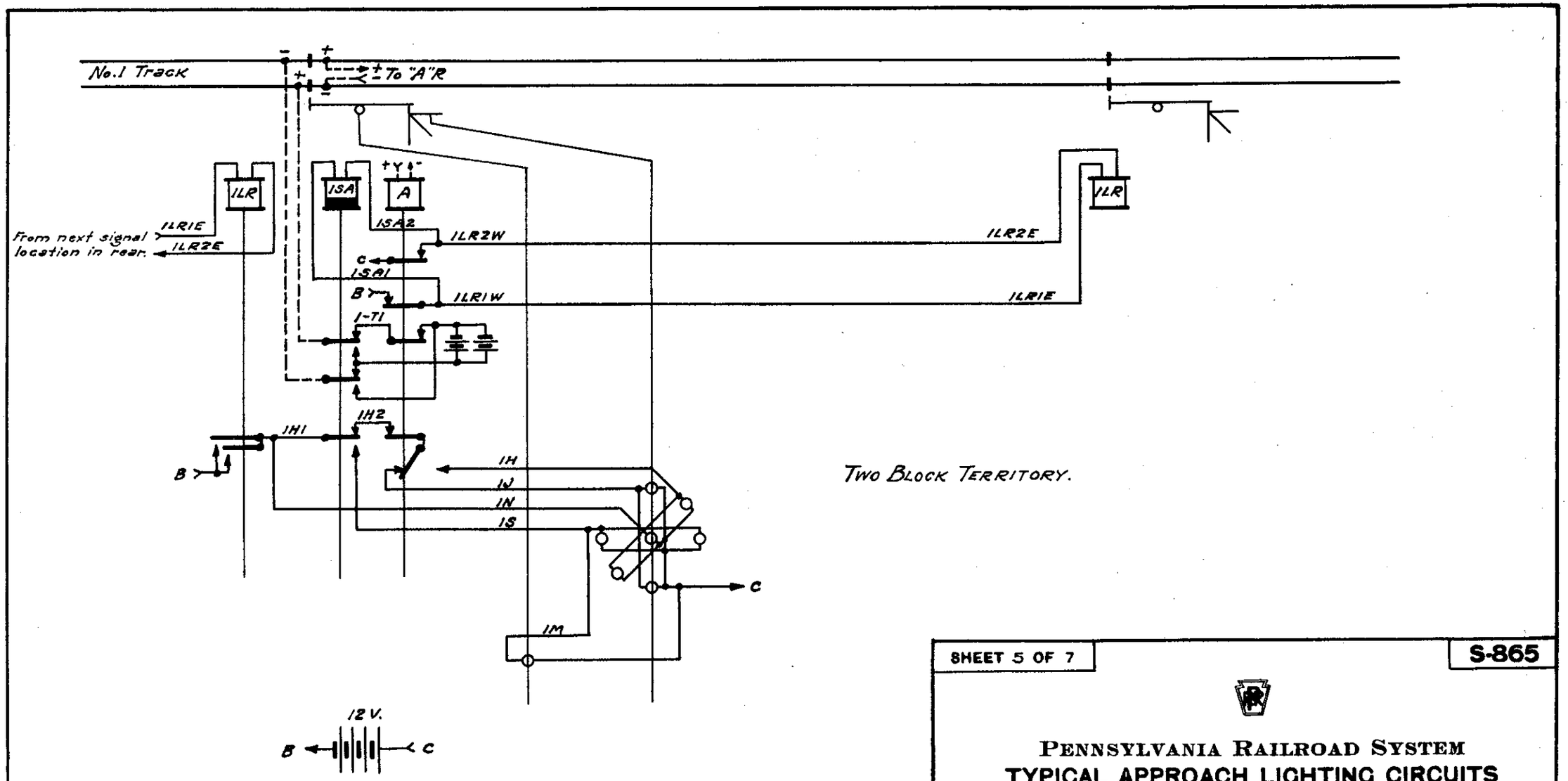

For General Notes see Sheet 1.

SHEET 5 OF 7

S-865

PENNSYLVANIA RAILROAD SYSTEM

TYPICAL APPROACH LIGHTING CIRCUITS

OFFICE OF CHIEF SIGNAL ENGINEER,
PHILA., PA., FEB. 27, 1924.

NOT TO SCALE

Approved
Chief Signal Engineer

Approved
Chief Engineer

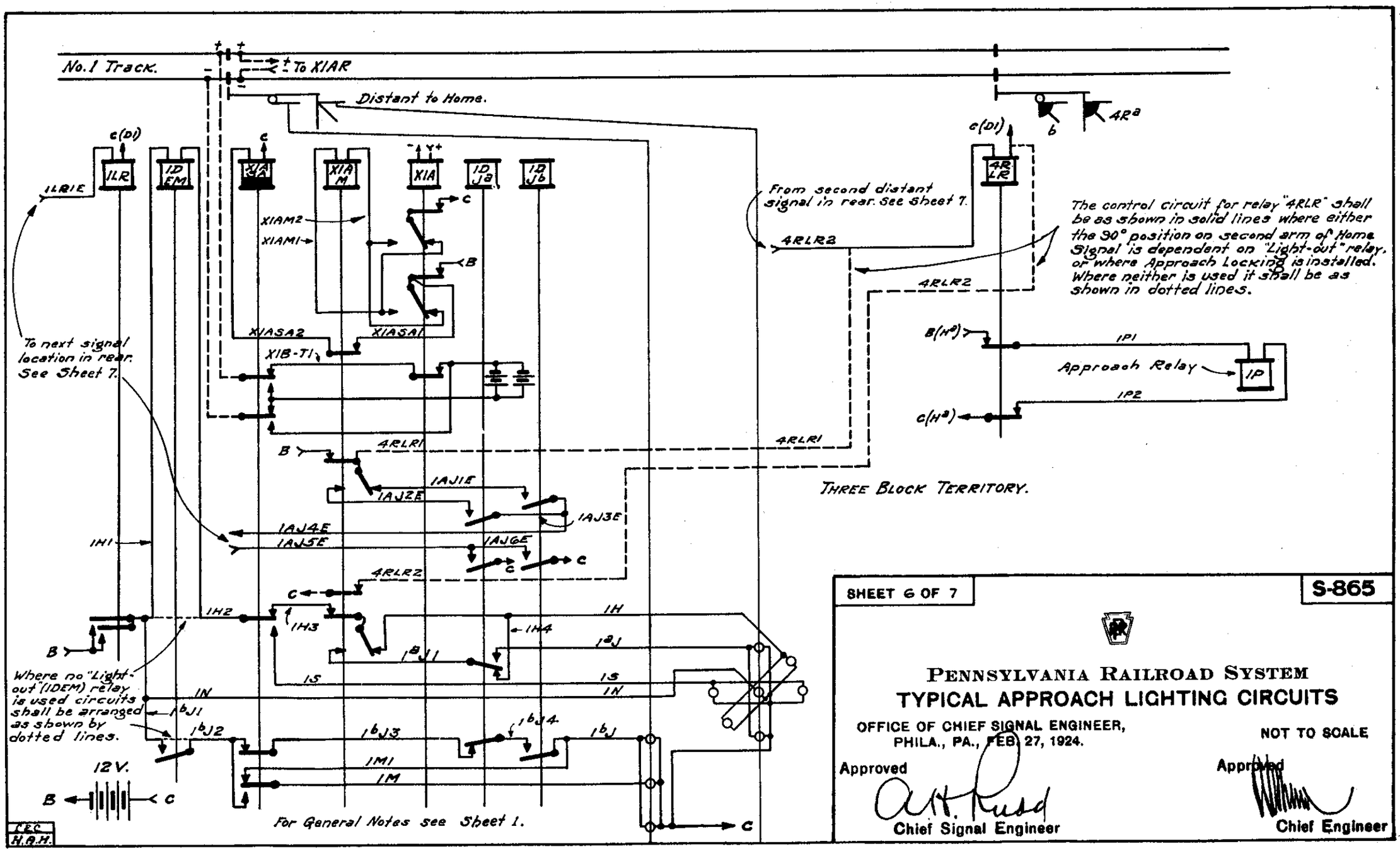

SHEET 6 OF 7

S-865

PENNSYLVANIA RAILROAD SYSTEM

TYPICAL APPROACH LIGHTING CIRCUITS

OFFICE OF CHIEF SIGNAL ENGINEER,
PHILA., PA., FEB. 27, 1924.

NOT TO SCALE

Approved

Chief Signal Engineer

Approved

Chief Engineer

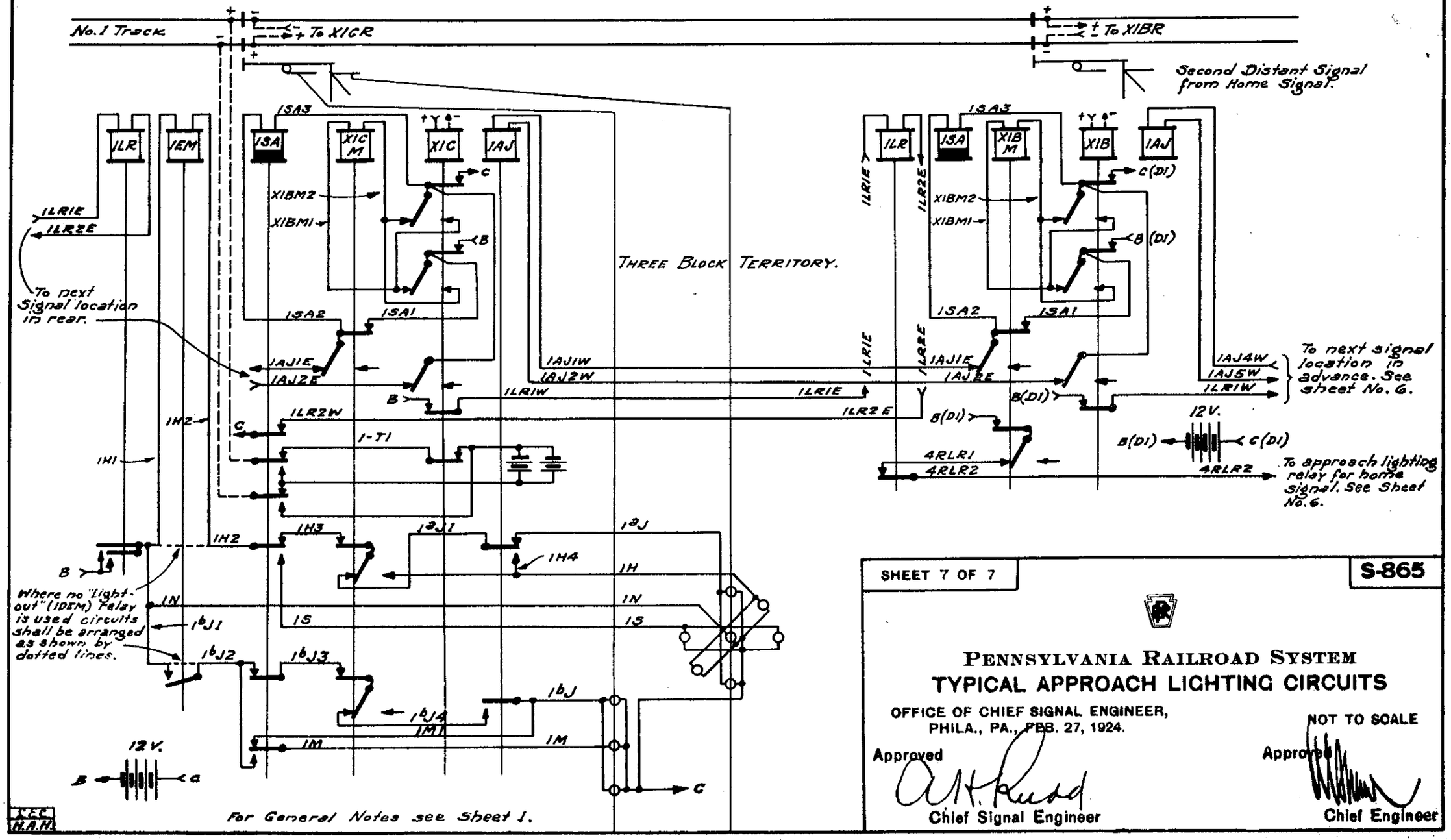

SHEET 7 OF 7

S-865

PENNSYLVANIA RAILROAD SYSTEM

TYPICAL APPROACH LIGHTING CIRCUITS

OFFICE OF CHIEF SIGNAL ENGINEER,
PHILA., PA., FEB. 27, 1924.

NOT TO SCALE

Approved

Chief Signal Engineer

Approved

Chief Engineer

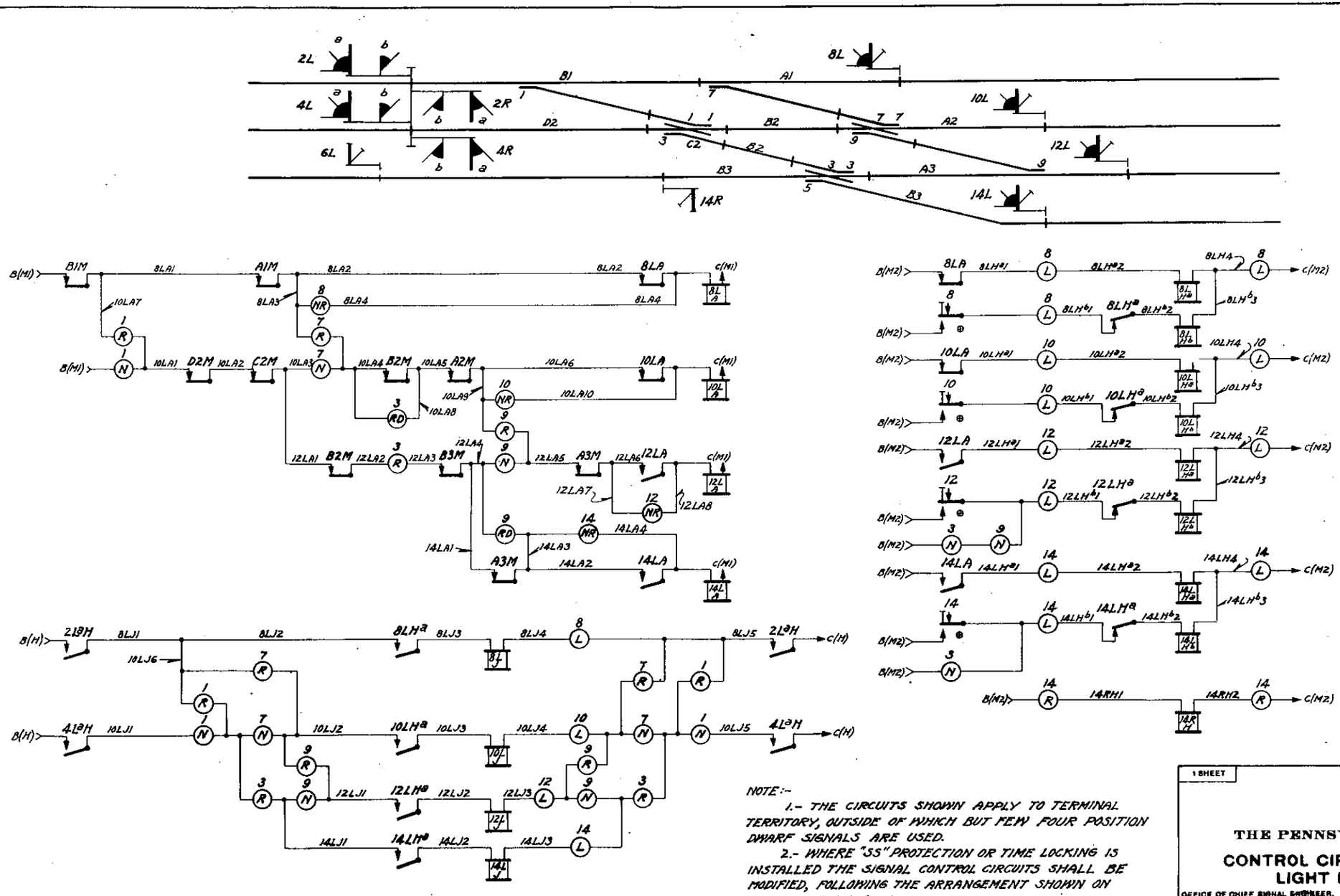

NOTE:-

1.- THE CIRCUITS SHOWN APPLY TO TERMINAL TERRITORY, OUTSIDE OF WHICH BUT FEW FOUR POSITION DWARF SIGNALS ARE USED.

2.- WHERE "SS" PROTECTION OR TIME LOCKING IS INSTALLED THE SIGNAL CONTROL CIRCUITS SHALL BE MODIFIED, FOLLOWING THE ARRANGEMENT SHOWN ON TYPICAL PLAN S-862.

3.- SIGNAL LIGHTING CIRCUITS SHALL BE IN ACCORDANCE WITH STANDARD PLAN S-855.

4.- ⊕ = MECHANICAL STICK PUSH BUTTON.

REVISIONS

REDRAWN FROM PLAN S-867 DATED 8-3-22.

1 SHEET

S-867

THE PENNSYLVANIA RAILROAD

TYPICAL

CONTROL CIRCUITS FOR POSITION LIGHT DWARF SIGNALS

OFFICE OF CHIEF SIGNAL ENGINEER, PHILA., PA., SEPT. 20, 1927

NOT TO SCALE

Approved

Chief Signal Engineer

Approved

Chief Engineer

Aspect	Sheet No.	Aspect	Sheet No.
	2 Electric Road A.C. Propulsion 2 Block Territory.		10 Electric Road. A.C. Propulsion.
	3 2 Block Territory.		11
	4 Electric Road. A.C. Propulsion. Distant Signal.		
	5 Distant Signal.		
	6 Electric Road. A.C. Propulsion. Automatic Signal.		
	7 Automatic Signal.		
	8 Electric Road. A.C. Propulsion.		
	9		

Note:-

Light wires shall not be smaller than indicated as follows:-
No. 9-A.W.G.- Between control relays and signal terminals.
No. 14-A.W.G.- Between signal terminals and lamps.

For arrangement of terminals in terminal box see Pennsylvania System Standard Plan S-858.

Each mast shall have separate positive & negative wires.
Lighting circuits shall be so adjusted as to have uniform voltage at the lamps. The voltage shall be between the following limits:- Maximum-11.5V, Minimum-11.0V.
Lamps shall be in accordance with Pennsylvania System Standard Plan Basic No. S-483.

All crossovers, turnouts & derails between Home and Distant Signal or between automatic signal and the next signal in advance shall be equipped and operated in accordance with Pennsylvania System Standard Plan Basic No. S-228, S-230 or S-232 and shall be insulated and bonded in accordance with Pennsylvania System Standard Plan S-803.

Signal wires and control relays have been numbered from arbitrary track number and correct number for the track which signal governs shall be substituted.
Control of Distant Signal relays (1DJ,a 1DJ,b &c) shall be shown on circuit plan of interlocking. For typical arrangement see Pennsylvania System Typical Circuit Plan S-853.

Track circuits shown between Home and Distant Signals are typical. Detail arrangement of track circuits should be made for each installation to suit local conditions and requirements.
Where no "Light-out" (1DEM) relay is used circuits shall be arranged as shown in dotted lines.
All circuits are for steam road unless otherwise noted.

Where distant signal is also the advance signal for another interlocking or where automatic signal is the advance signal at an interlocking:-
Polarized track feed for section in the rear of the signal shall be omitted and the primary side of the Lighting Transformer shall be connected direct to the 110V. Bus.
For Typical Arrangement for Lighting Position Light Home & Advance Signals When Normal Power Fails see Pennsylvania System Typical Circuit Plan S-805. Where this arrangement is used circuits shall be modified accordingly and shown in detail on circuit plan to be prepared for each interlocking or block signal installation.

Where direction of traffic is north and south substitute letter "N" for "E" and "S" for "W" in line control circuits.

C.E.C.
H.A.H.

Revisions.

11-9-23. Circuit arrangement where no "Light-out" relay is used and voltage for Model 15 Vane "Light-out" relay formerly not shown. Sheets 1, 2, 3, 8 and 9 changed.
Approved:
A. H. Rudd
Chief Signal Engineer.
C.E.C.
H.A.H.

SHEET 1 OF 11

S-868

PENNSYLVANIA SYSTEM

STANDARD

LIGHTING CIRCUITS FOR POSITION LIGHT GRADE SIGNALS

OFFICE OF CHIEF SIGNAL ENGINEER,
PHILA., PA., MARCH 28, 1922.

NOT TO SCALE

Correct
A. H. Rudd
Chief Signal Engineer

Approved
Chief Engineer

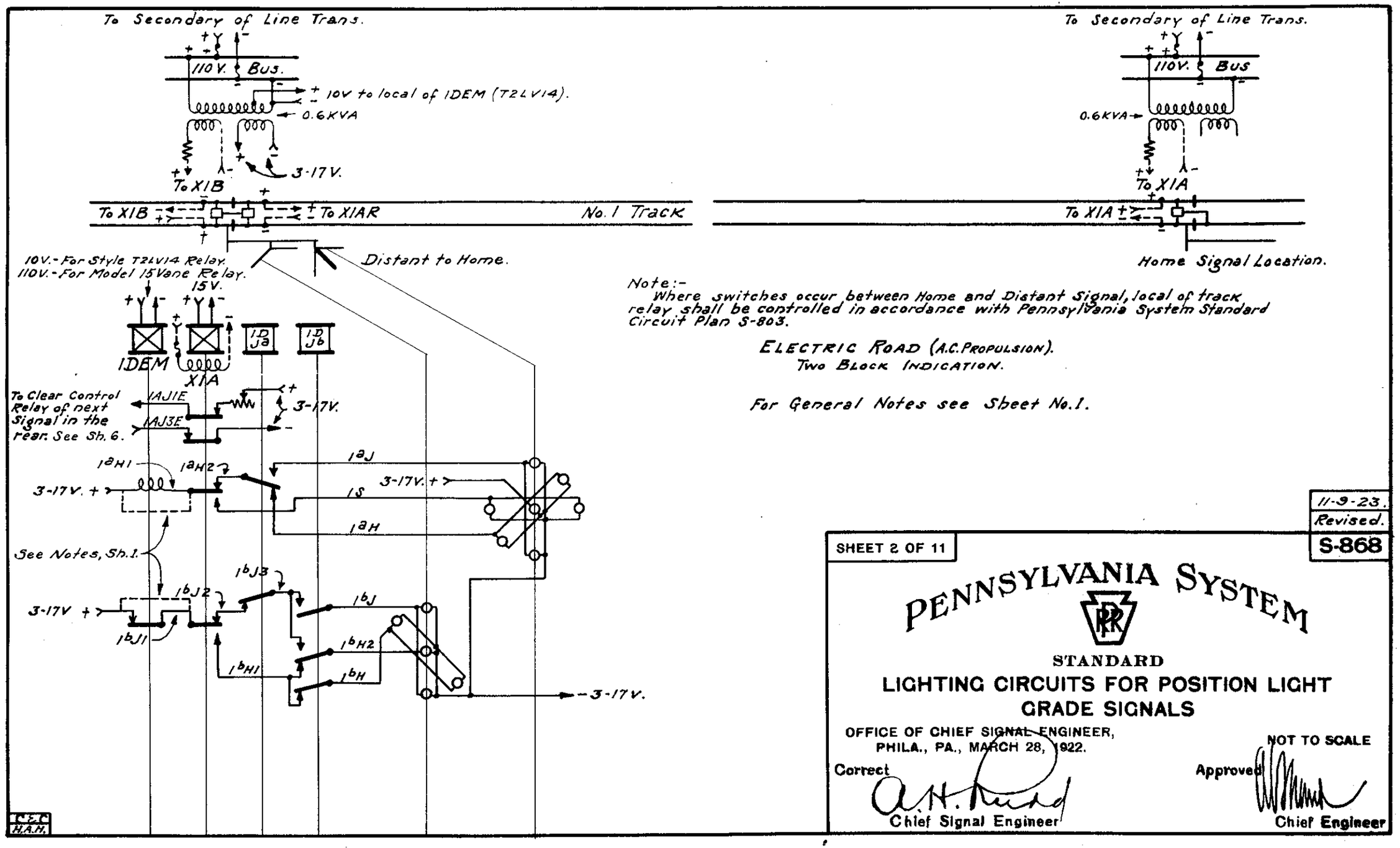

Note:-
Where switches occur between Home and Distant Signal, local of track relay shall be controlled in accordance with Pennsylvania System Standard Circuit Plan S-803.

ELECTRIC ROAD (A.C. PROPULSION).
TWO BLOCK INDICATION.

For General Notes see Sheet No. 1.

11-9-23.
Revised.

S-868

SHEET 2 OF 11

PENNSYLVANIA SYSTEM

STANDARD

LIGHTING CIRCUITS FOR POSITION LIGHT GRADE SIGNALS

OFFICE OF CHIEF SIGNAL ENGINEER,
PHILA., PA., MARCH 28, 1922.

NOT TO SCALE

Correct

Chief Signal Engineer

Approved

Chief Engineer

C.S.C.
H.A.H.

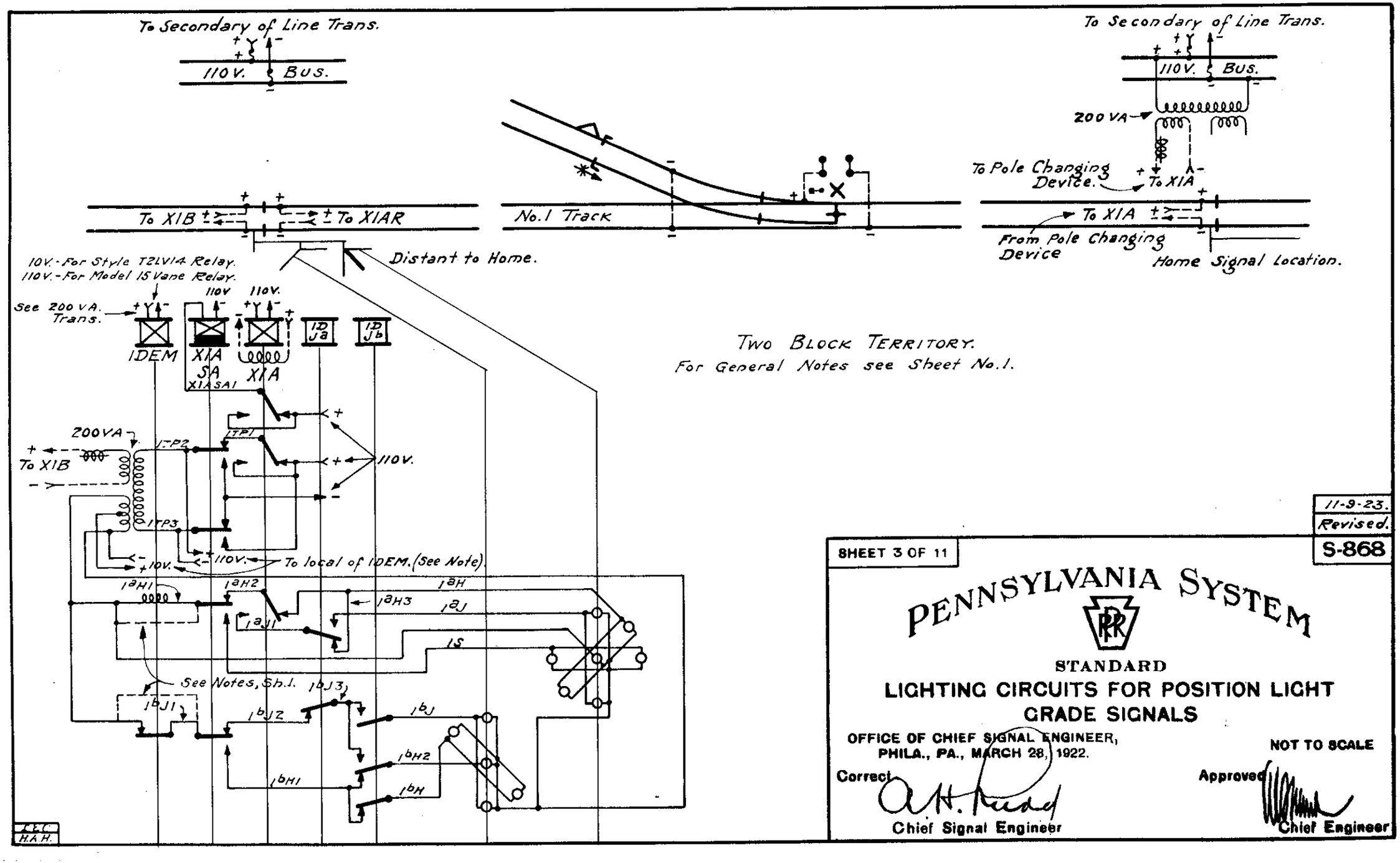
To Secondary of Line Trans.
110V. Bus.
To Secondary of Line Trans.
110V. Bus.
200 VA
To Pole Changing Device.
To X1A
To X1B
To X1AR
No. 1 Track
To X1A
From Pole Changing Device
Home Signal Location.
Distant to Home.
10V.-For Style T2LV14 Relay.
110V.-For Model 15 Vane Relay.
See 200 VA. Trans.
110V
110V.
1DEM
X1A SA
X1A
1D Ja
1D Jb
X1A SA1
200VA
To X1B
1TP1
1TP2
1TP3
110V.
10V.
110V.
To local of 1DEM. (See Note)
1aH1
1aH2
1aH3
1aH
1aJ
1aJ1
1S
See Notes, Sh.1.
1bJ1
1bJ2
1bJ3
1bJ
1bH2
1bH1
1bH
Two Block Territory.
For General Notes see Sheet No. 1.
11-9-23.
Revised.
S-868
SHEET 3 OF 11
PENNSYLVANIA SYSTEM
STANDARD
LIGHTING CIRCUITS FOR POSITION LIGHT GRADE SIGNALS
OFFICE OF CHIEF SIGNAL ENGINEER,
PHILA., PA., MARCH 28, 1922.
NOT TO SCALE
Correct
Chief Signal Engineer
Approved
Chief Engineer
H.A.H.

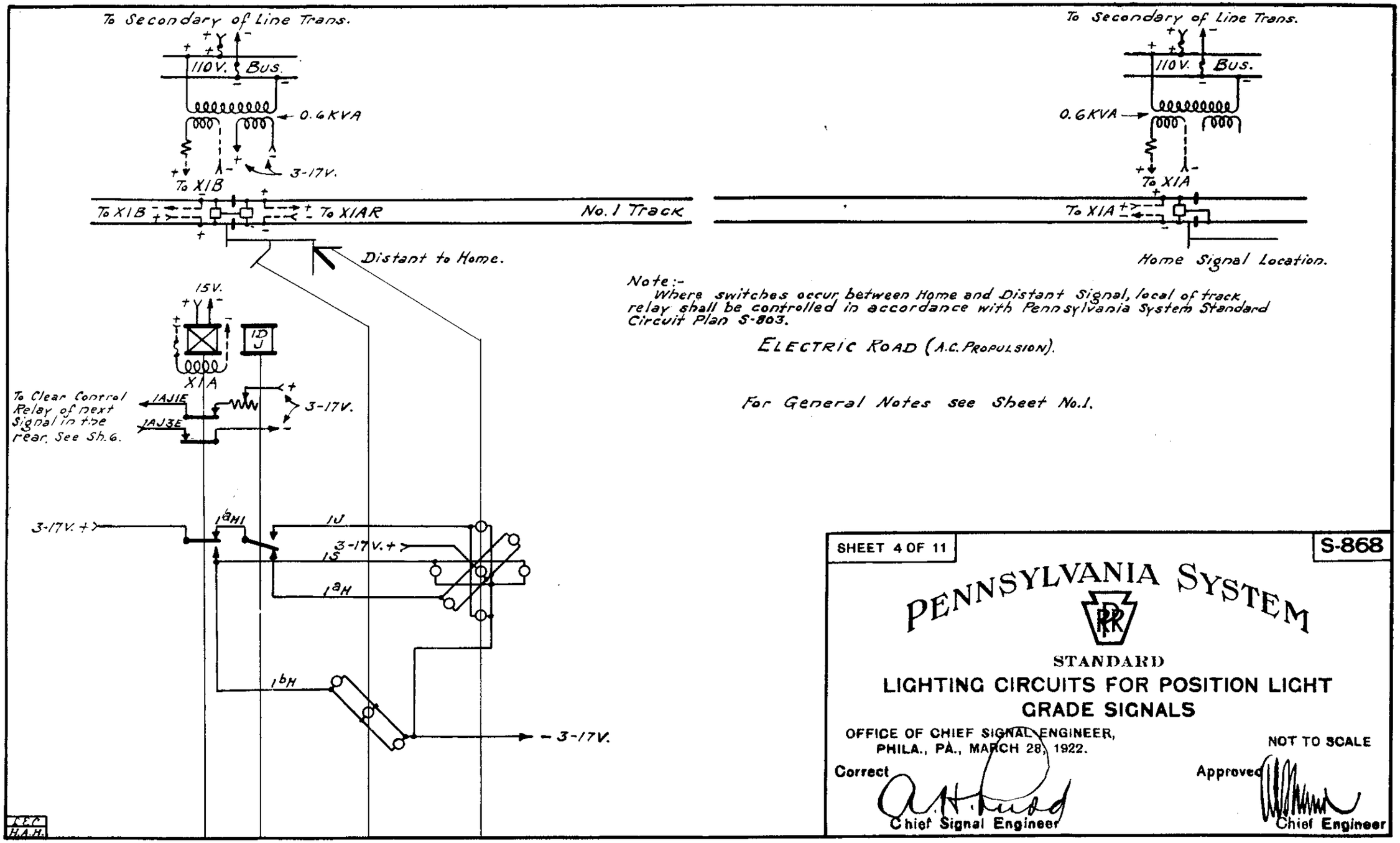

Note:-
Where switches occur between Home and Distant Signal, local of track relay shall be controlled in accordance with Pennsylvania System Standard Circuit Plan S-803.

ELECTRIC ROAD (A.C. PROPULSION).

For General Notes see Sheet No. 1.

SHEET 4 OF 11

S-868

PENNSYLVANIA SYSTEM

STANDARD

LIGHTING CIRCUITS FOR POSITION LIGHT GRADE SIGNALS

OFFICE OF CHIEF SIGNAL ENGINEER,
PHILA., PA., MARCH 28, 1922.

NOT TO SCALE

Correct

Chief Signal Engineer

Approved

Chief Engineer

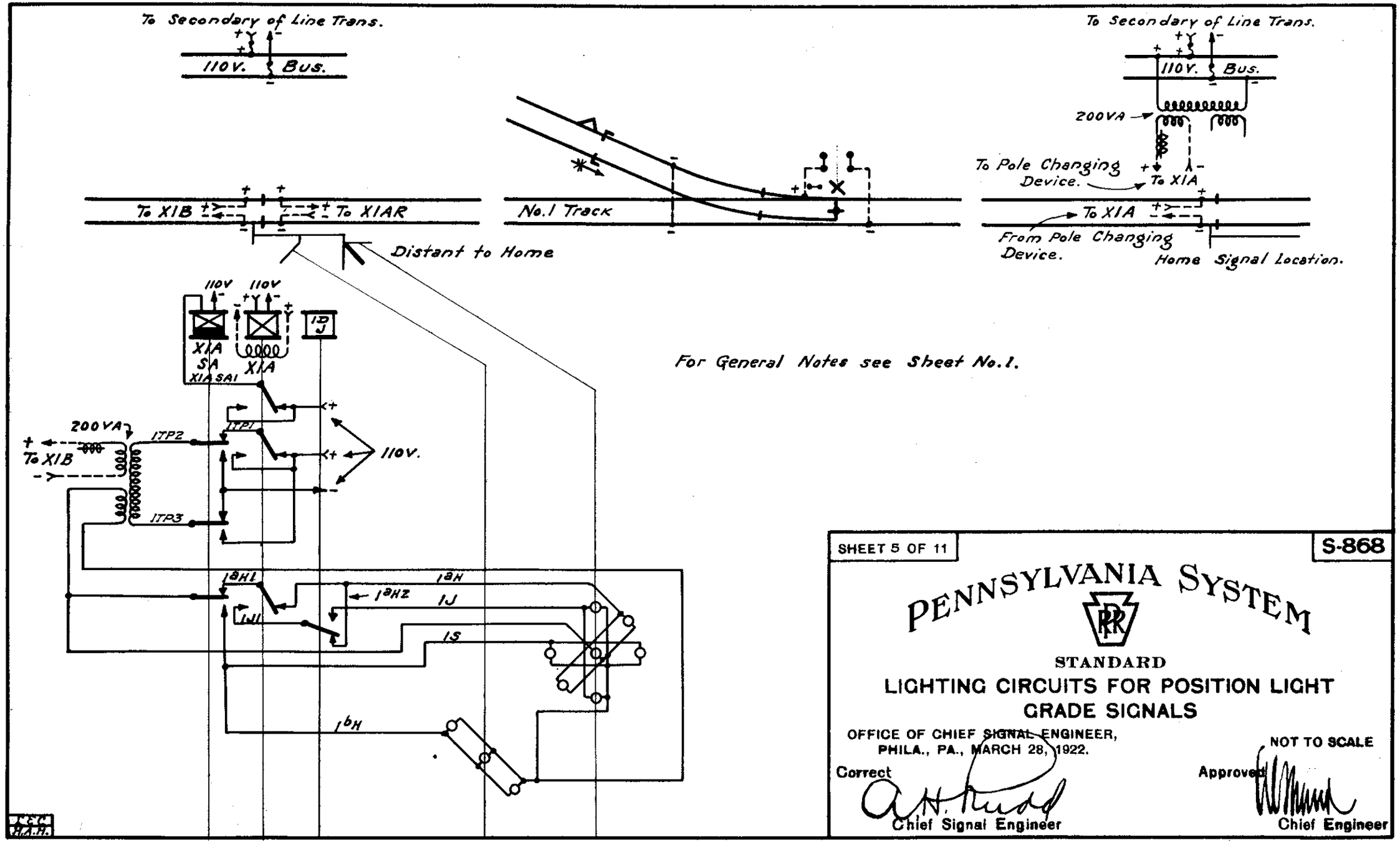
To Secondary of Line Trans.
110V. Bus.
To Secondary of Line Trans.
110V. Bus.
200VA
To Pole Changing Device.
To XIA
To XIA
From Pole Changing Device.
Home Signal Location.
To XIB
To XIAR
No. 1 Track
Distant to Home
110V
110V
XIA SA
XIA
XIA SA1
1PJ
For General Notes see Sheet No. 1.
200VA
To XIB
1TP2
1TP1
110V.
1TP3
1HA1
1HA
1HA2
1J
1M1
1S
1HB
SHEET 5 OF 11
S-868
PENNSYLVANIA SYSTEM
STANDARD
LIGHTING CIRCUITS FOR POSITION LIGHT GRADE SIGNALS
OFFICE OF CHIEF SIGNAL ENGINEER,
PHILA., PA., MARCH 28, 1922.
NOT TO SCALE
Correct
Chief Signal Engineer
Approved
Chief Engineer

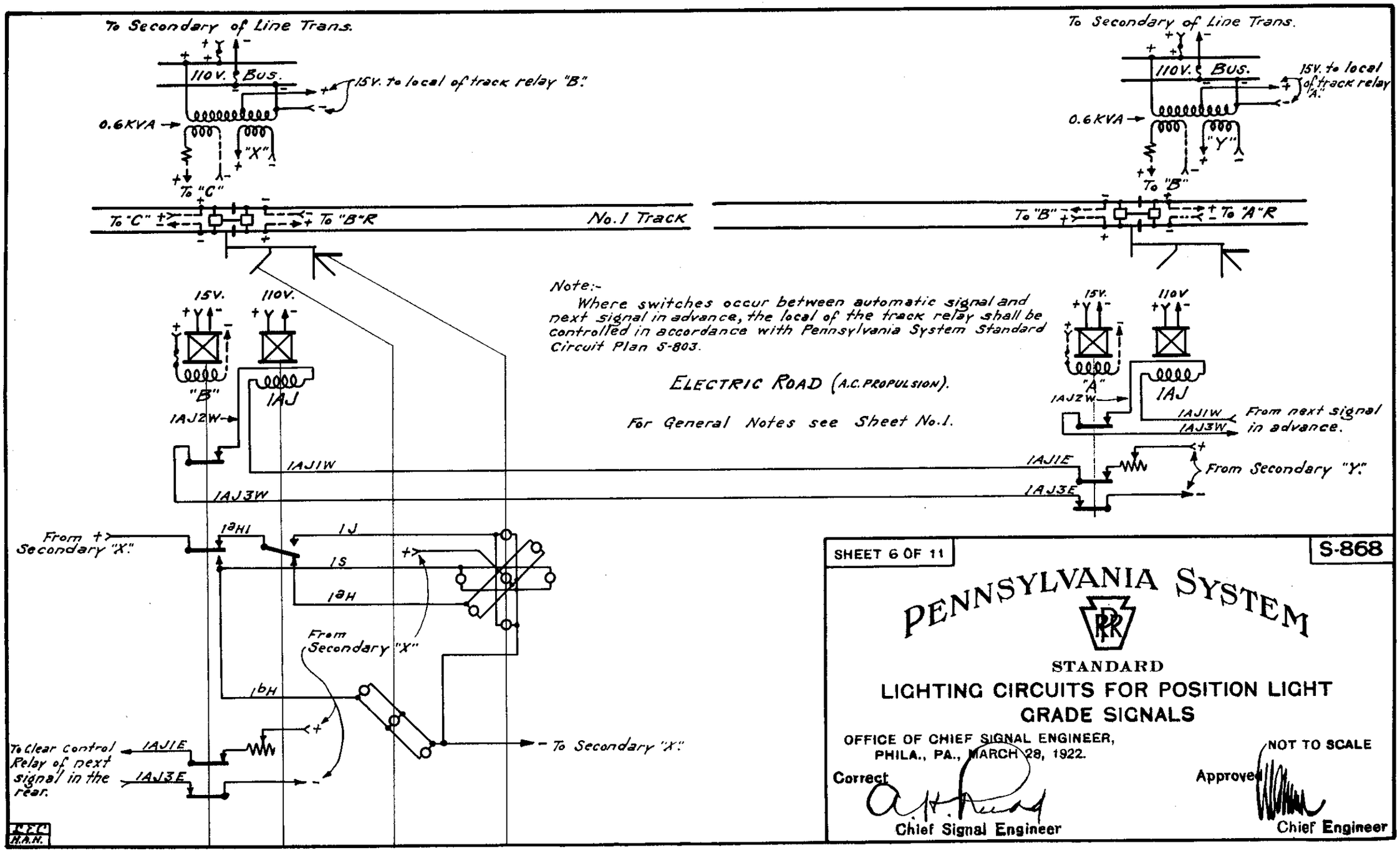
To Secondary of Line Trans.
110V. Bus.
15V. to local of track relay "B."
0.6KVA
"X"
To "C"
To "C"
To "B"R
No. 1 Track
To Secondary of Line Trans.
110V. Bus.
15V. to local of track relay "A."
0.6KVA
"Y"
To "B"
To "B"
To "A"R
15V.
110V.
"B"
1AJ
1AJ2W
1AJ1W
1AJ3W
15V.
110V
"A"
1AJ
1AJ2W
1AJ1W
1AJ3W
From next signal in advance.
1AJ1E
1AJ3E
From Secondary "Y."
From Secondary "X."
1aH1
1J
1S
1aH
From Secondary "X"
1bH
To Secondary "X."
To Clear Control Relay of next signal in the rear.
1AJ1E
1AJ3E
Note:-
Where switches occur between automatic signal and next signal in advance, the local of the track relay shall be controlled in accordance with Pennsylvania System Standard Circuit Plan S-803.
ELECTRIC ROAD (A.C. PROPULSION).
For General Notes see Sheet No. 1.
SHEET 6 OF 11
S-868
PENNSYLVANIA SYSTEM
STANDARD
LIGHTING CIRCUITS FOR POSITION LIGHT GRADE SIGNALS
OFFICE OF CHIEF SIGNAL ENGINEER,
PHILA., PA., MARCH 28, 1922.
NOT TO SCALE
Correct
Chief Signal Engineer
Approved
Chief Engineer
H.A.H.

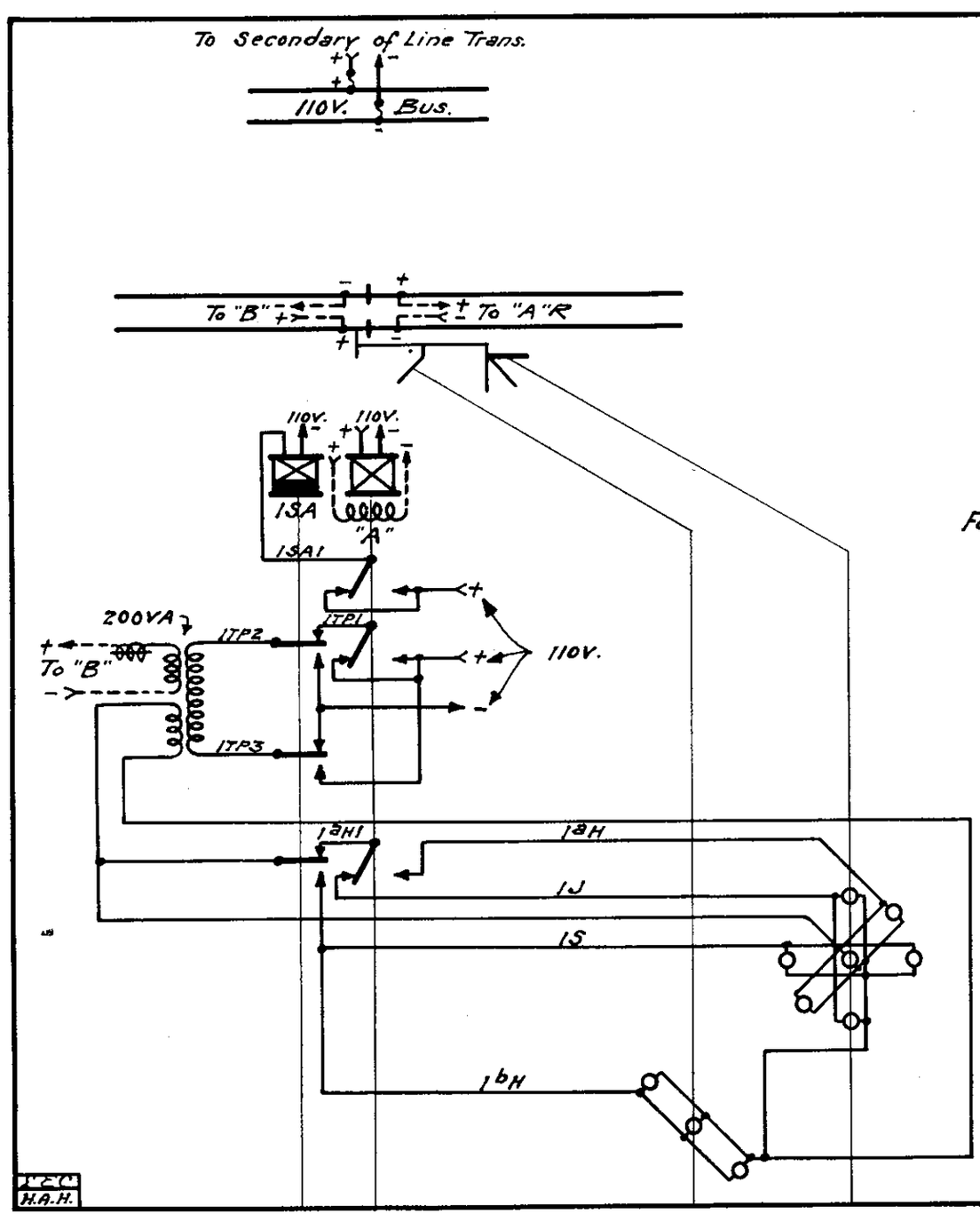

For General Notes see Sheet No. 1.

SHEET 7 OF 11

S-868

PENNSYLVANIA SYSTEM

STANDARD

LIGHTING CIRCUITS FOR POSITION LIGHT GRADE SIGNALS

OFFICE OF CHIEF SIGNAL ENGINEER,
PHILA., PA., MARCH 28, 1922.

NOT TO SCALE

Correct

Chief Signal Engineer

Approved

Chief Engineer

H.A.H.

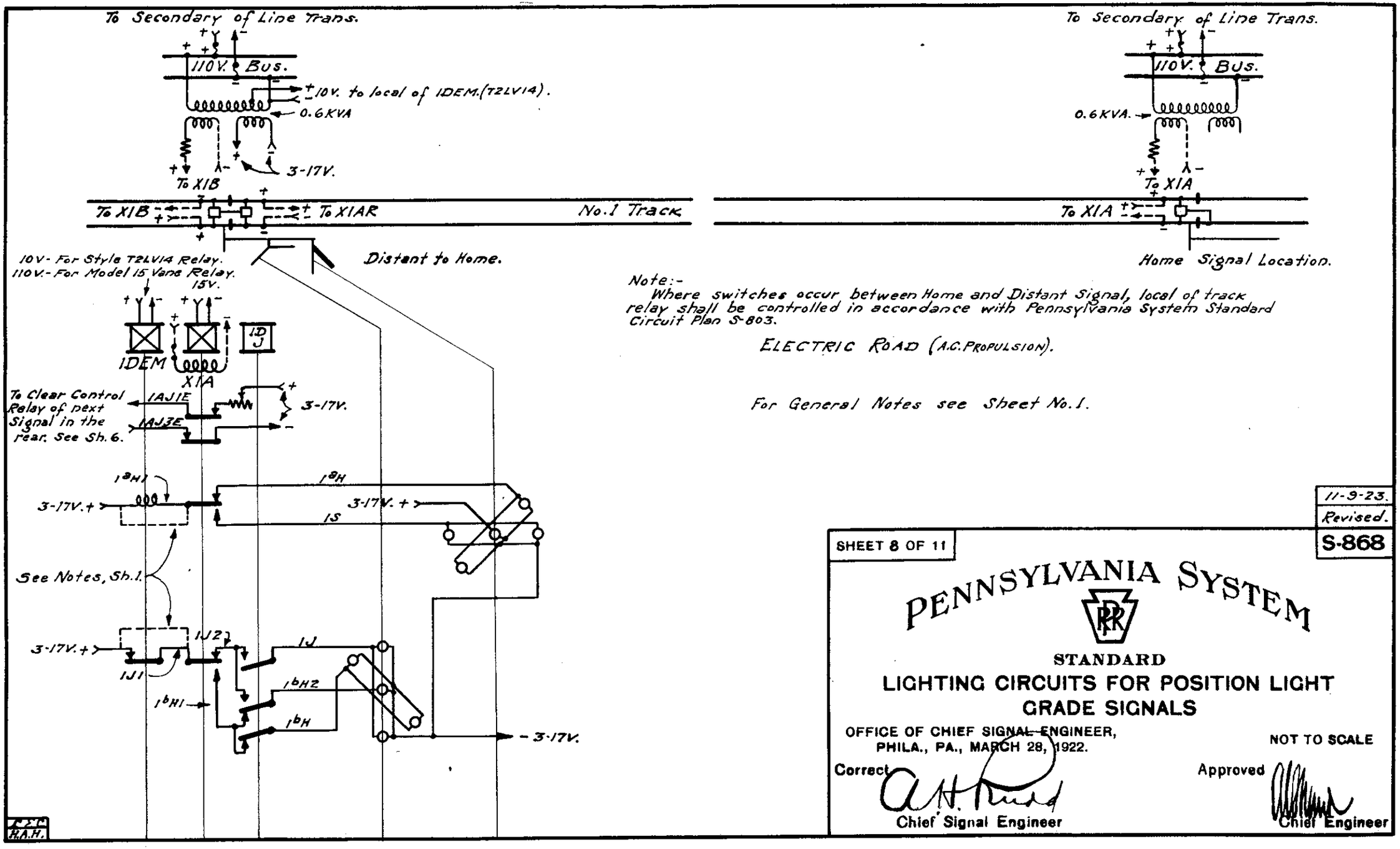

Note:-
Where switches occur between Home and Distant Signal, local of track relay shall be controlled in accordance with Pennsylvania System Standard Circuit Plan S-803.

ELECTRIC ROAD (A.C. PROPULSION).

For General Notes see Sheet No.1.

11-9-23.
Revised.
S-868

SHEET 8 OF 11

PENNSYLVANIA SYSTEM

STANDARD

LIGHTING CIRCUITS FOR POSITION LIGHT GRADE SIGNALS

OFFICE OF CHIEF SIGNAL ENGINEER,
PHILA., PA., MARCH 28, 1922.

NOT TO SCALE

Correct

Chief Signal Engineer

Approved

Chief Engineer

R.S.C.
H.A.H.

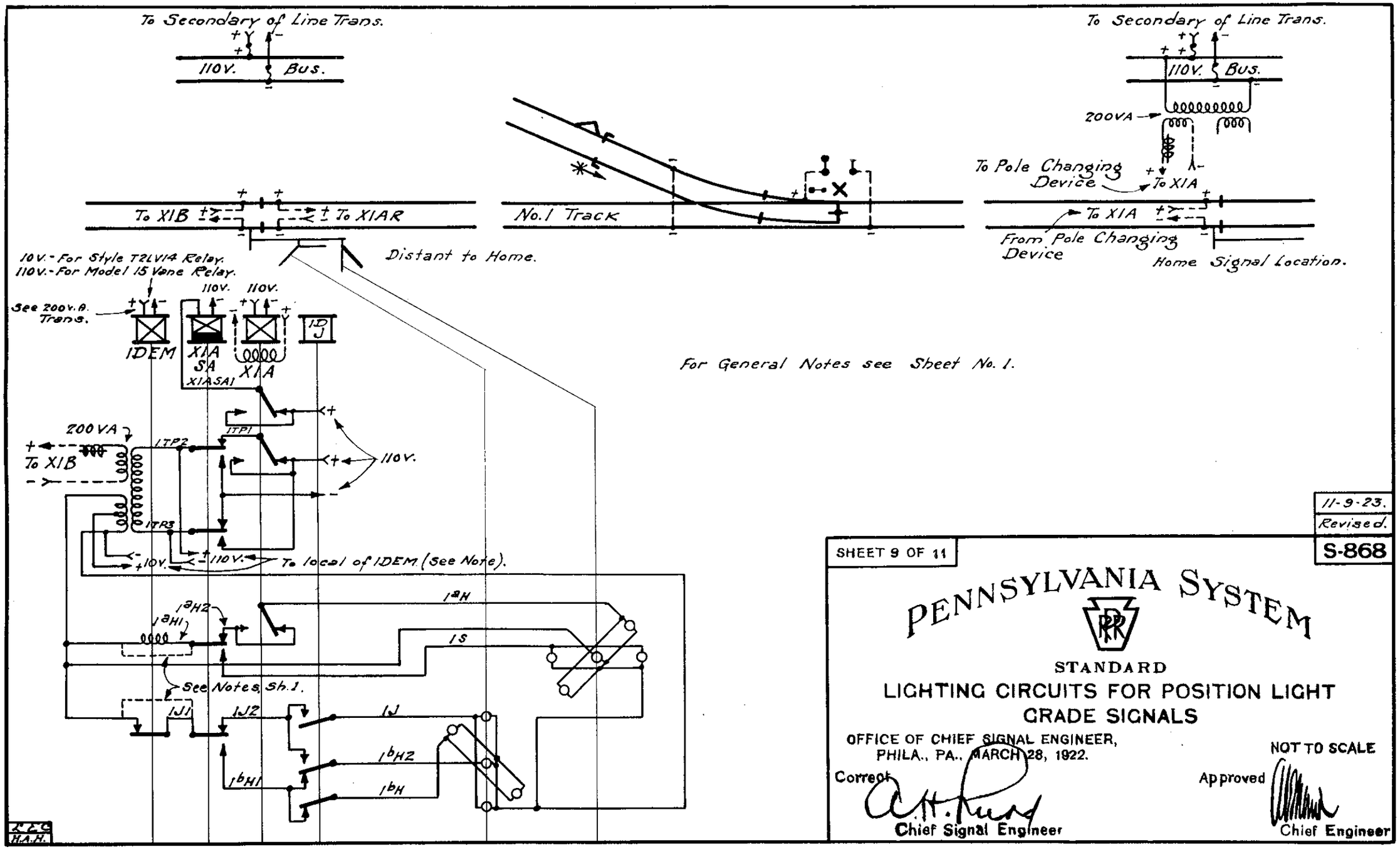

11-9-23.
Revised.

SHEET 9 OF 11

S-868

PENNSYLVANIA SYSTEM

STANDARD

LIGHTING CIRCUITS FOR POSITION LIGHT GRADE SIGNALS

OFFICE OF CHIEF SIGNAL ENGINEER,
PHILA., PA., MARCH 28, 1922.

NOT TO SCALE

Correct

Chief Signal Engineer

Approved

Chief Engineer

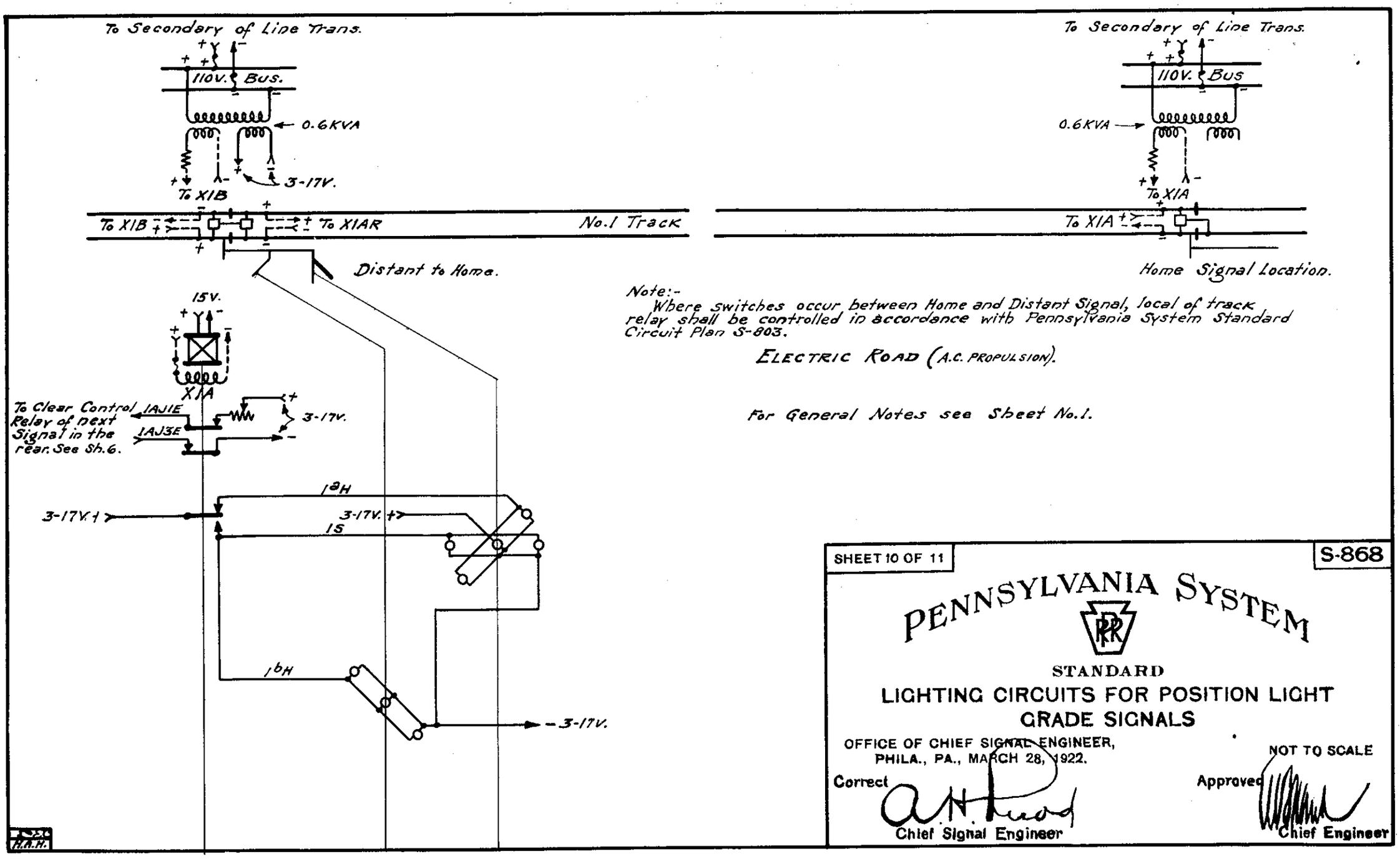
To Secondary of Line Trans.
110V. Bus.
0.6KVA
3-17V.
To X1B
To X1B
To X1AR
No.1 Track
Distant to Home.
15V.
X1A
To Clear Control Relay of next Signal in the rear. See Sh.6.
1AJ1E
1AJ3E
3-17V.
3-17V.
1aH
3-17V.
1S
1bH
-3-17V.
To Secondary of Line Trans.
110V. Bus
0.6KVA
To X1A
To X1A
Home Signal Location.
Note:-
Where switches occur between Home and Distant Signal, local of track relay shall be controlled in accordance with Pennsylvania System Standard Circuit Plan S-803.
ELECTRIC ROAD (A.C. PROPULSION).
For General Notes see Sheet No.1.
SHEET 10 OF 11
S-868
PENNSYLVANIA SYSTEM
STANDARD
LIGHTING CIRCUITS FOR POSITION LIGHT GRADE SIGNALS
OFFICE OF CHIEF SIGNAL ENGINEER,
PHILA., PA., MARCH 28, 1922.
NOT TO SCALE
Correct
Chief Signal Engineer
Approved
Chief Engineer
H.A.H.

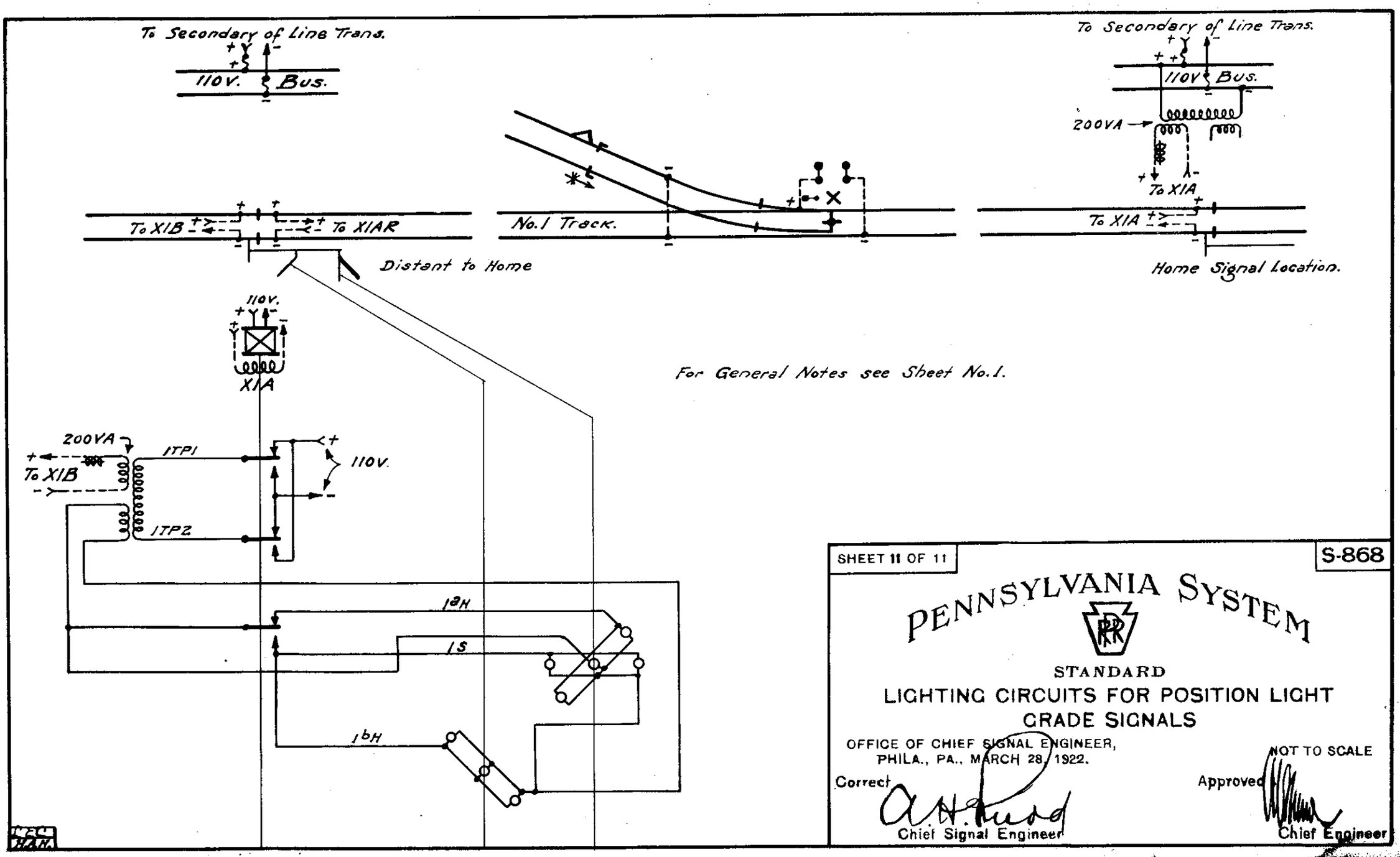
To Secondary of Line Trans.
110V. Bus.
To Secondary of Line Trans.
110V Bus.
200VA
To X1A
To X1B
To X1AR
No. 1 Track.
To X1A
Distant to Home
Home Signal Location.
110V.
X1A
For General Notes see Sheet No. 1.
200VA
To X1B
1TP1
1TP2
110V.
1aH
1S
1bH
SHEET 11 OF 11
S-868
PENNSYLVANIA SYSTEM
STANDARD
LIGHTING CIRCUITS FOR POSITION LIGHT GRADE SIGNALS
OFFICE OF CHIEF SIGNAL ENGINEER,
PHILA., PA., MARCH 28, 1922.
NOT TO SCALE
Correct
Chief Signal Engineer
Approved
Chief Engineer

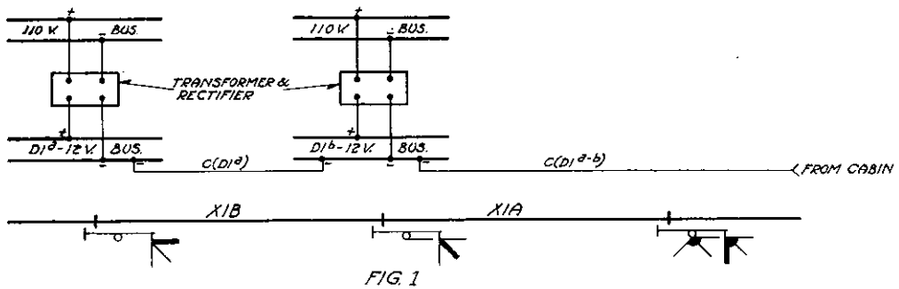

FIG. 1

ARRANGEMENT FOR USE WHERE A.C. INTERLOCKING TRACK CIRCUITS ARE PROVIDED.

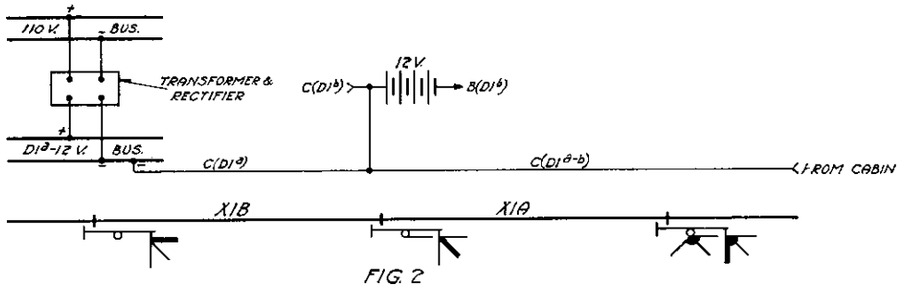

FIG. 2

ARRANGEMENT FOR USE WHERE D.C. INTERLOCKING TRACK CIRCUITS ARE PROVIDED.

D.C. POWER SUPPLY FOR APPROACH RELAYS AND SIGNAL INDICATION CIRCUIT WHERE RELIABLE A.C. POWER IS AVAILABLE.

NOTE:-

1. ⊕ = MECHANICAL STICK PUSH BUTTON.
2. WHERE TIME LOCKING ONLY IS INSTALLED OMIT PORTION OF CIRCUIT SHOWN IN DOTTED LINES, SH'S. 3,4 & 5.
3. CLOCKWORK RELEASES SHALL BE EQUIPPED WITH LATCH AND THE NORMAL POSITION OF THE POINTER SET AT ZERO. THE SETTING OF THE RELEASES SHALL BE IN ACCORDANCE WITH C.S.E. 9.
4. INDICATION LIGHTS CONNECTED IN MULTIPLE WITH THE INDICATION LOCK, AS SHOWN ON SH'S. 3 & 4, SHALL BE INSTALLED WHERE, IN THE JUDGMENT OF THE SUPERINTENDENT OF TELEGRAPH & SIGNALS, THEY ARE NECESSARY.

REVISIONS.

SHEET 1 OF 5

S-870

THE PENNSYLVANIA RAILROAD

TYPICAL

SIGNAL INDICATION AND APPROACH LOCKING CIRCUITS

OFFICE OF CHIEF SIGNAL ENGINEER, PHILA., PA., MARCH 30, 1928.

NOT TO SCALE

Approved

Chief Signal Engineer

Approved

Chief Engineer

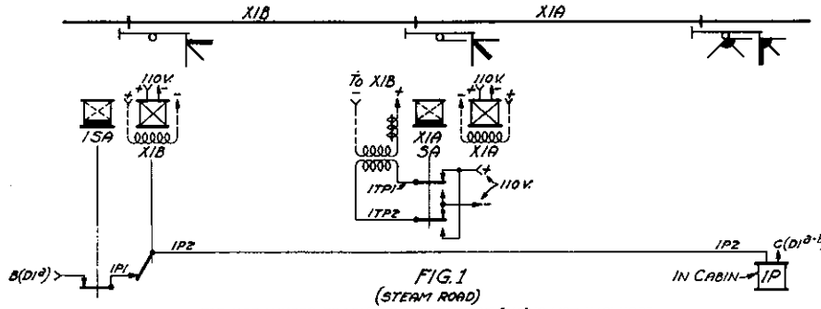

FIG. 1
(STEAM ROAD)
FOR USE WHERE TRACK RELAY CONTACT (X1A) IS NOT INCLUDED IN POLE-CHANGING CIRCUIT FOR X1B.

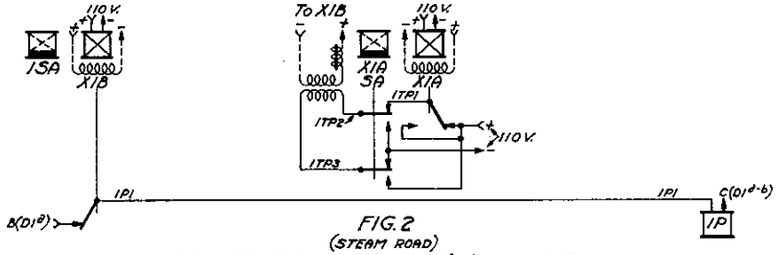

FIG. 2
(STEAM ROAD)
FOR USE WHERE TRACK RELAY CONTACT (X1A) IS INCLUDED IN POLE-CHANGING CIRCUIT FOR X1B.

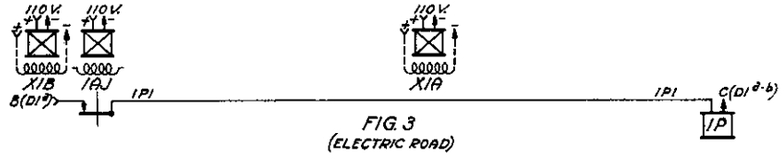

FIG. 3
(ELECTRIC ROAD)

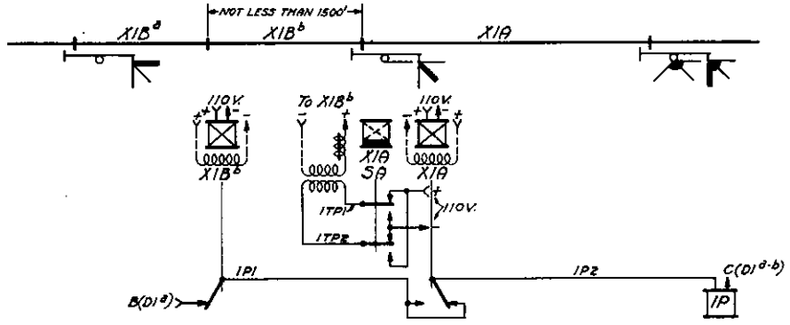

FIG. 4
(STEAM ROAD)
TWO BLOCK INDICATION.

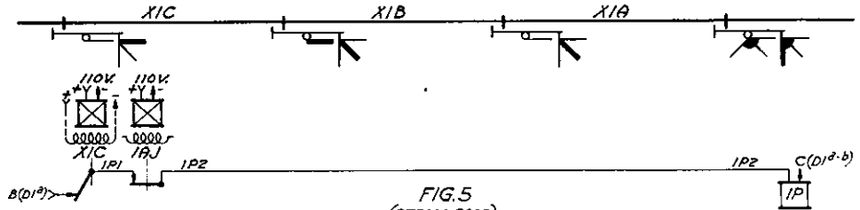

FIG. 5
(STEAM ROAD)
FOR USE WHERE POLARIZED TRACK AND NEUTRAL LINE CIRCUITS ARE PROVIDED - PLAN S-857-FIG. 5.

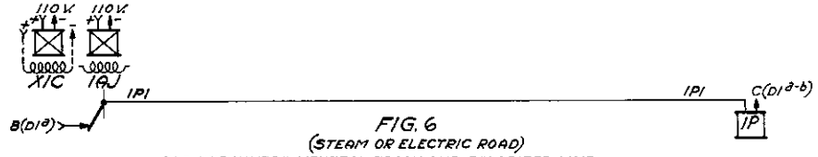

FIG. 6
(STEAM OR ELECTRIC ROAD)
FOR USE WHERE NEUTRAL TRACK AND POLARIZED LINE CIRCUITS ARE PROVIDED - PLAN S-857-FIGS. 1 & 2.

THREE BLOCK INDICATION

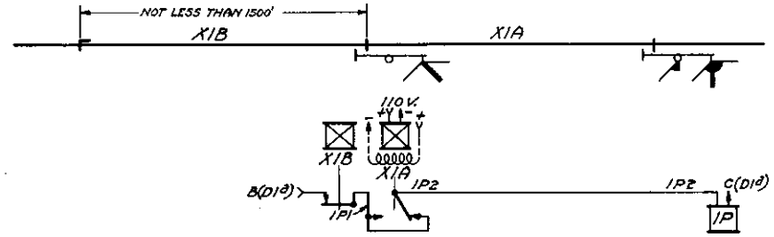

FIG. 7
DISTANT SIGNALS NORMALLY LIGHTED.

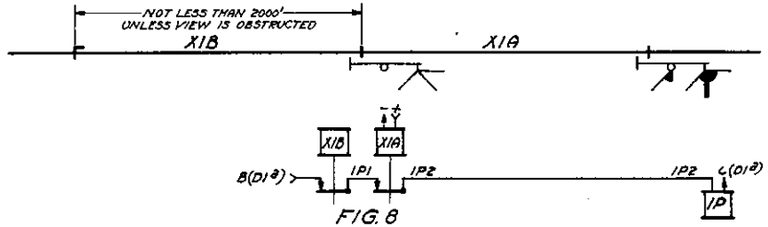

FIG. 8
DISTANT SIGNALS APPROACH LIGHTED.

MANUAL BLOCK TERRITORY

FIG. 9
WHERE POWER IS OBTAINED FROM PRIMARY OR PORTABLE STORAGE BATTERIES APPROACH INDICATORS (WITHOUT CONTACTS) SHALL BE USED.

FIG. 10
WHERE POWER IS OBTAINED FROM SOURCE OTHER THAN PRIMARY OR PORTABLE STORAGE BATTERIES APPROACH INDICATION LIGHTS SHALL BE USED.

FOR GENERAL NOTES SEE SHEET NO. 1.

REVISIONS.

SUPERSEDES APPROACH RELAY CONTROLS SHOWN ON SHTS. 1 & 2 OF PLAN S-870, DATED 3-3-25, LAST REVISED 3-3-25.

APPROACH RELAYS.

SHEET 2 OF 6

S-870

THE PENNSYLVANIA RAILROAD
TYPICAL
SIGNAL INDICATION AND APPROACH LOCKING CIRCUITS

OFFICE OF CHIEF SIGNAL ENGINEER, PHILA., PA., MARCH 30, 1928.

NOT TO SCALE

Approved
Chief Signal Engineer

Approved
Chief Engineer

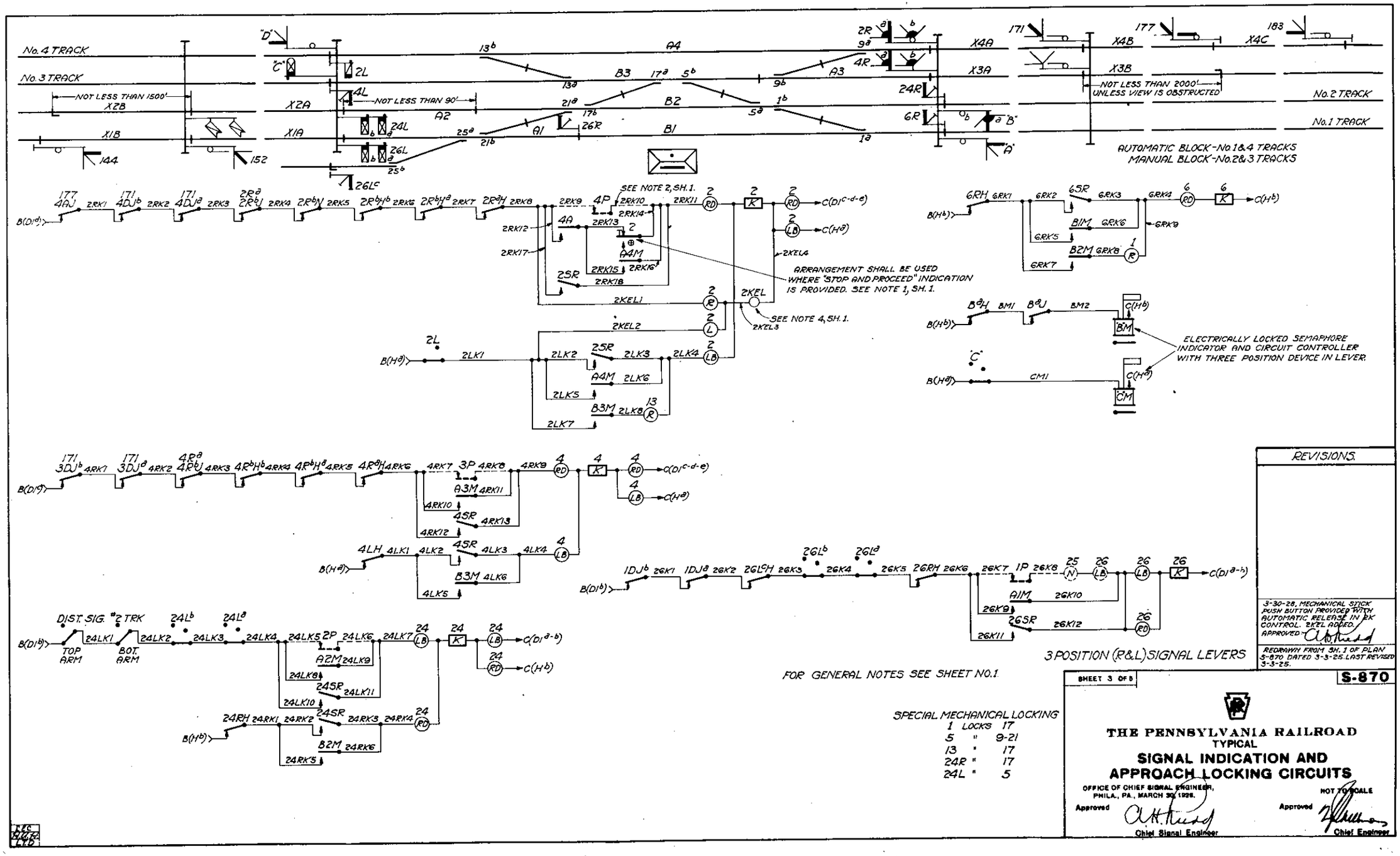
No. 4 TRACK
No. 3 TRACK
NOT LESS THAN 1500'
NOT LESS THAN 90'
NOT LESS THAN 2000' UNLESS VIEW IS OBSTRUCTED
No. 2 TRACK
No. 1 TRACK
AUTOMATIC BLOCK-No. 1 & 4 TRACKS
MANUAL BLOCK-No. 2 & 3 TRACKS
SEE NOTE 2, SH. 1.
ARRANGEMENT SHALL BE USED WHERE "STOP AND PROCEED" INDICATION IS PROVIDED. SEE NOTE 1, SH. 1.
SEE NOTE 4, SH. 1.
ELECTRICALLY LOCKED SEMAPHORE INDICATOR AND CIRCUIT CONTROLLER WITH THREE POSITION DEVICE IN LEVER.
TOP ARM
BOT. ARM
DIST. SIG. #2 TRK
3 POSITION (R&L) SIGNAL LEVERS
FOR GENERAL NOTES SEE SHEET NO. 1.
SPECIAL MECHANICAL LOCKING
1 LOCKS 17
5 " 9-21
13 " 17
24R " 17
24L " 5
REVISIONS.
3-30-28, MECHANICAL STICK PUSH BUTTON PROVIDED WITH AUTOMATIC RELEASE IN BK CONTROL. BKEL ADDED.
APPROVED
REDRAWN FROM SH. 1 OF PLAN S-870 DATED 3-3-25. LAST REVISED 3-3-25.
SHEET 3 OF 8
S-870
THE PENNSYLVANIA RAILROAD
TYPICAL
SIGNAL INDICATION AND APPROACH LOCKING CIRCUITS
OFFICE OF CHIEF SIGNAL ENGINEER, PHILA., PA., MARCH 30, 1928.
NOT TO SCALE
Approved
Chief Signal Engineer
Approved
Chief Engineer

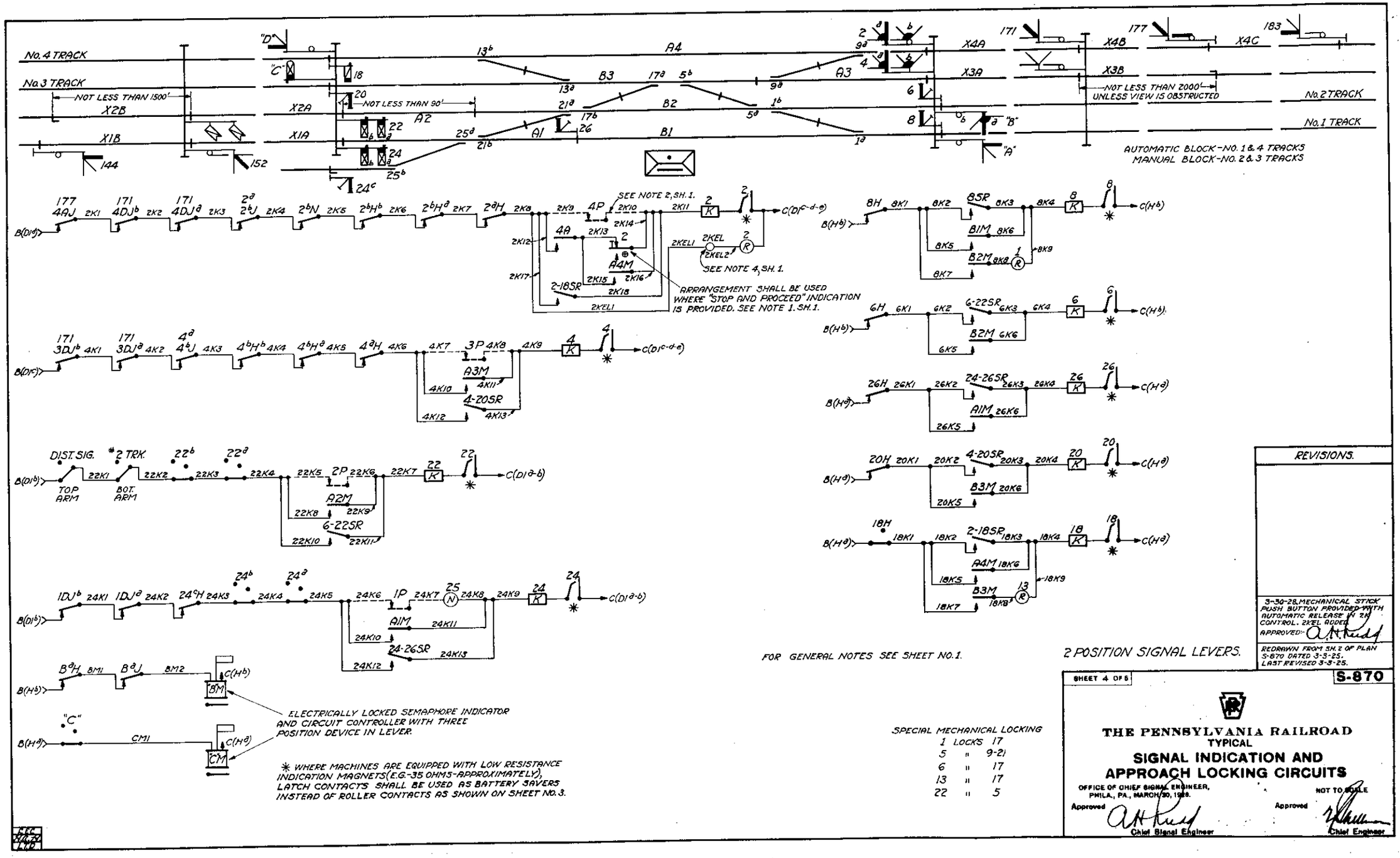
No. 4 TRACK
No. 3 TRACK
NOT LESS THAN 1500'
X2B
X1B
X2A
X1A
NOT LESS THAN 90'
A4
B3
A3
B2
A2
A1
B1
X4A
X4B
X4C
X3A
X3B
NOT LESS THAN 2000' UNLESS VIEW IS OBSTRUCTED
No. 2 TRACK
No. 1 TRACK
AUTOMATIC BLOCK-NO. 1 & 4 TRACKS
MANUAL BLOCK-NO. 2 & 3 TRACKS
SEE NOTE 2, SH. 1.
SEE NOTE 4, SH. 1.
ARRANGEMENT SHALL BE USED WHERE "STOP AND PROCEED" INDICATION IS PROVIDED. SEE NOTE 1. SH. 1.
DIST. SIG.
TOP ARM
BOT. ARM
2 TRK.
ELECTRICALLY LOCKED SEMAPHORE INDICATOR AND CIRCUIT CONTROLLER WITH THREE POSITION DEVICE IN LEVER.
* WHERE MACHINES ARE EQUIPPED WITH LOW RESISTANCE INDICATION MAGNETS (E.G.-35 OHMS-APPROXIMATELY), LATCH CONTACTS SHALL BE USED AS BATTERY SAVERS INSTEAD OF ROLLER CONTACTS AS SHOWN ON SHEET NO. 3.
FOR GENERAL NOTES SEE SHEET NO. 1.
2 POSITION SIGNAL LEVERS.
SPECIAL MECHANICAL LOCKING
1 LOCKS 17
5 " 9-21
6 " 17
13 " 17
22 " 5
REVISIONS.
3-30-28, MECHANICAL STICK PUSH BUTTON PROVIDED WITH AUTOMATIC RELEASE IN 2K CONTROL. 2KEL ADDED.
APPROVED:
REDRAWN FROM SH. 2 OF PLAN S-870 DATED 3-3-25. LAST REVISED 3-3-25.
SHEET 4 OF 6
S-870
THE PENNSYLVANIA RAILROAD
TYPICAL
SIGNAL INDICATION AND APPROACH LOCKING CIRCUITS
OFFICE OF CHIEF SIGNAL ENGINEER, PHILA., PA., MARCH 30, 1928.
NOT TO SCALE
Approved
Chief Signal Engineer
Approved
Chief Engineer

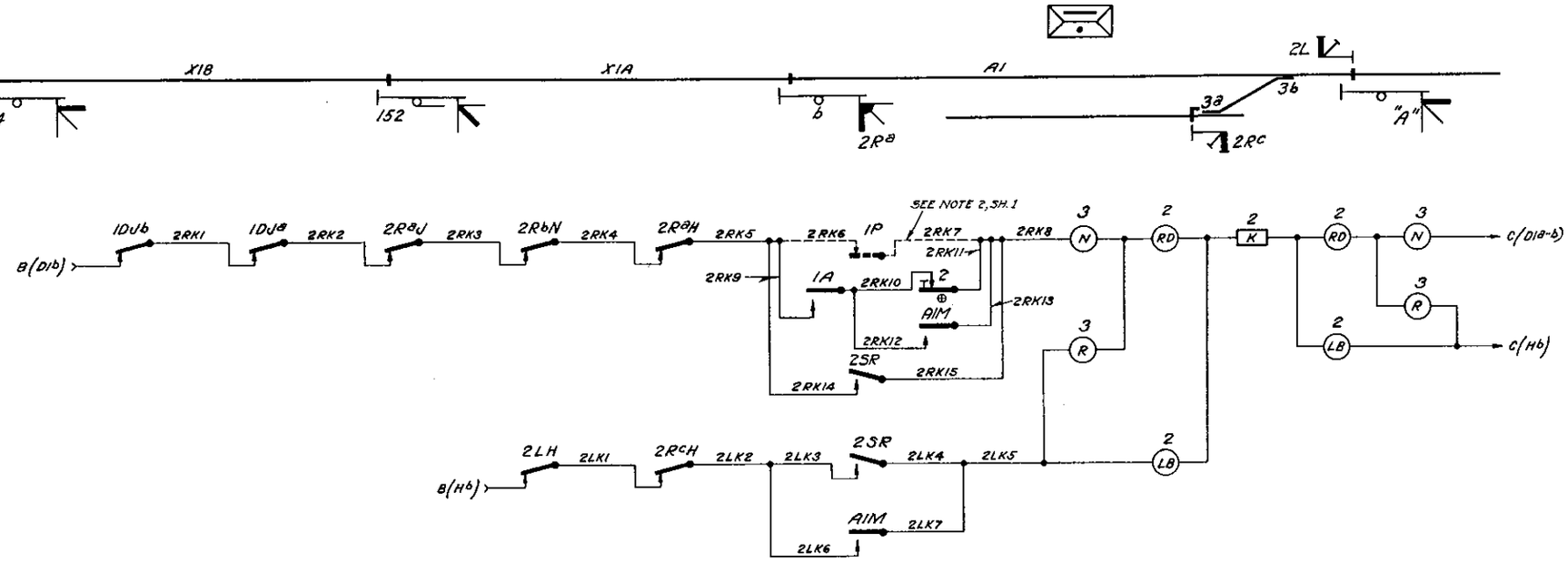

CIRCUIT TO BE USED WHERE SIGNALS CONTROLLED BY SAME LEVER MOVEMENT ARE LOCATED ON OPPOSITE SIDES OF CABIN.

FOR GENERAL NOTES SEE SHEET NO. 1.

REVISIONS

3-30-28, MECHANICAL STICK PUSH BUTTON PROVIDED WITH AUTOMATIC RELEASE. FORMERLY SH. 3.
APPROVED:- A.H. Rudd

SHEET 5 OF 5

S-870

THE PENNSYLVANIA RAILROAD
TYPICAL
SIGNAL INDICATION AND
APPROACH LOCKING CIRCUITS

OFFICE OF CHIEF SIGNAL ENGINEER,
PHILA., PA., AUG. 23, 1926

NOT TO SCALE

Approved A.H. Rudd
Chief Signal Engineer

Approved
Chief Engineer

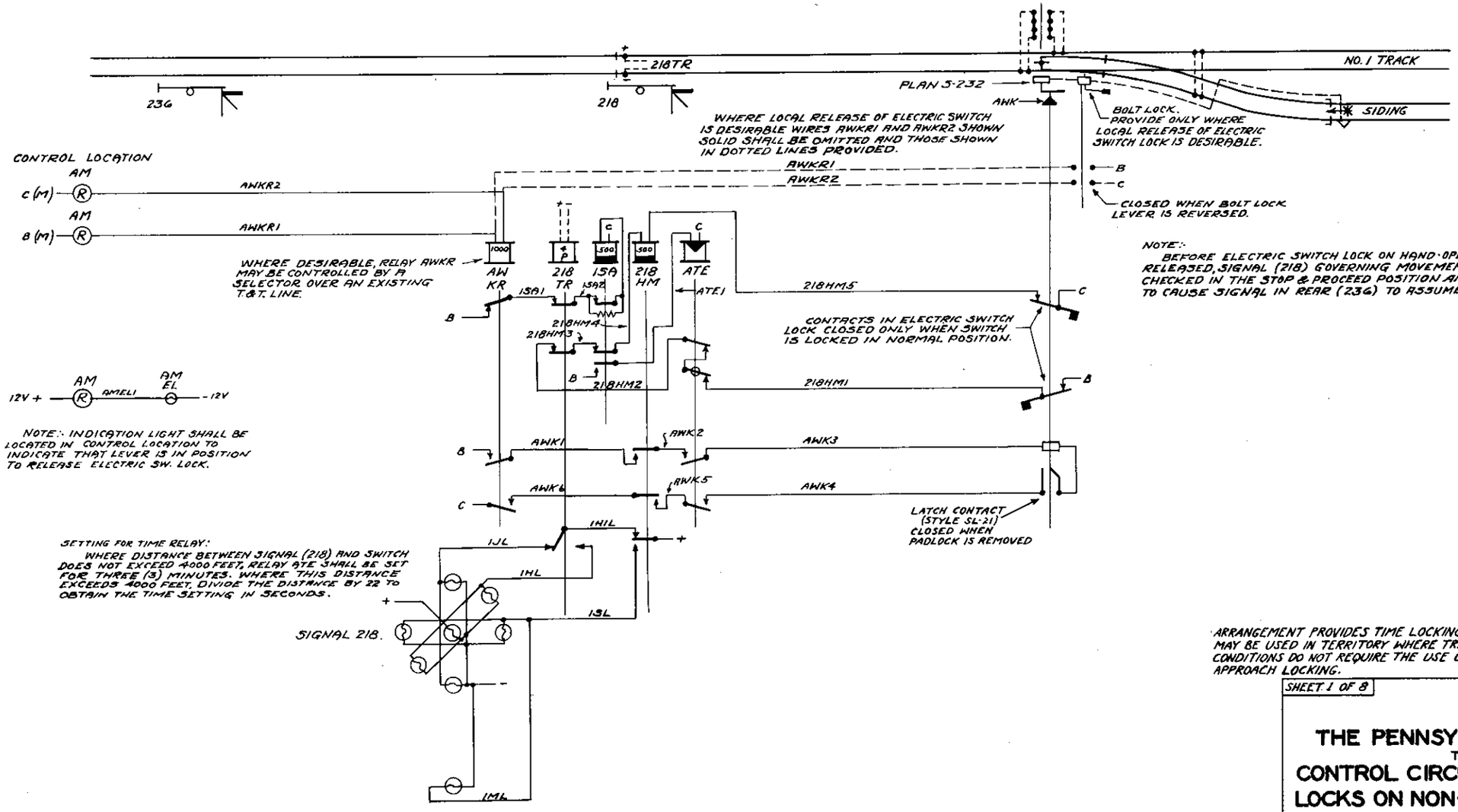

ARRANGEMENT PROVIDES TIME LOCKING ONLY. MAY BE USED IN TERRITORY WHERE TRAFFIC CONDITIONS DO NOT REQUIRE THE USE OF APPROACH LOCKING.

REVISIONS

NOV. 3, 1942. INDICATION LIGHT PROVIDED.

APPROVED: N. C. Stanton

SHEET 1 OF 8

S-872

THE PENNSYLVANIA RAILROAD

TYPICAL

CONTROL CIRCUITS FOR ELEC. SW. LOCKS ON NON-INTERLOCKED SWS.

OFFICE OF CHIEF ENGINEER, PHILA., PA., AUG. 6, 1942.

NOT TO SCALE

APPROVED: N. C. Stanton, ASST. CHIEF ENGINEER-S&S.

APPROVED: M. Wright, CHIEF ENGINEER

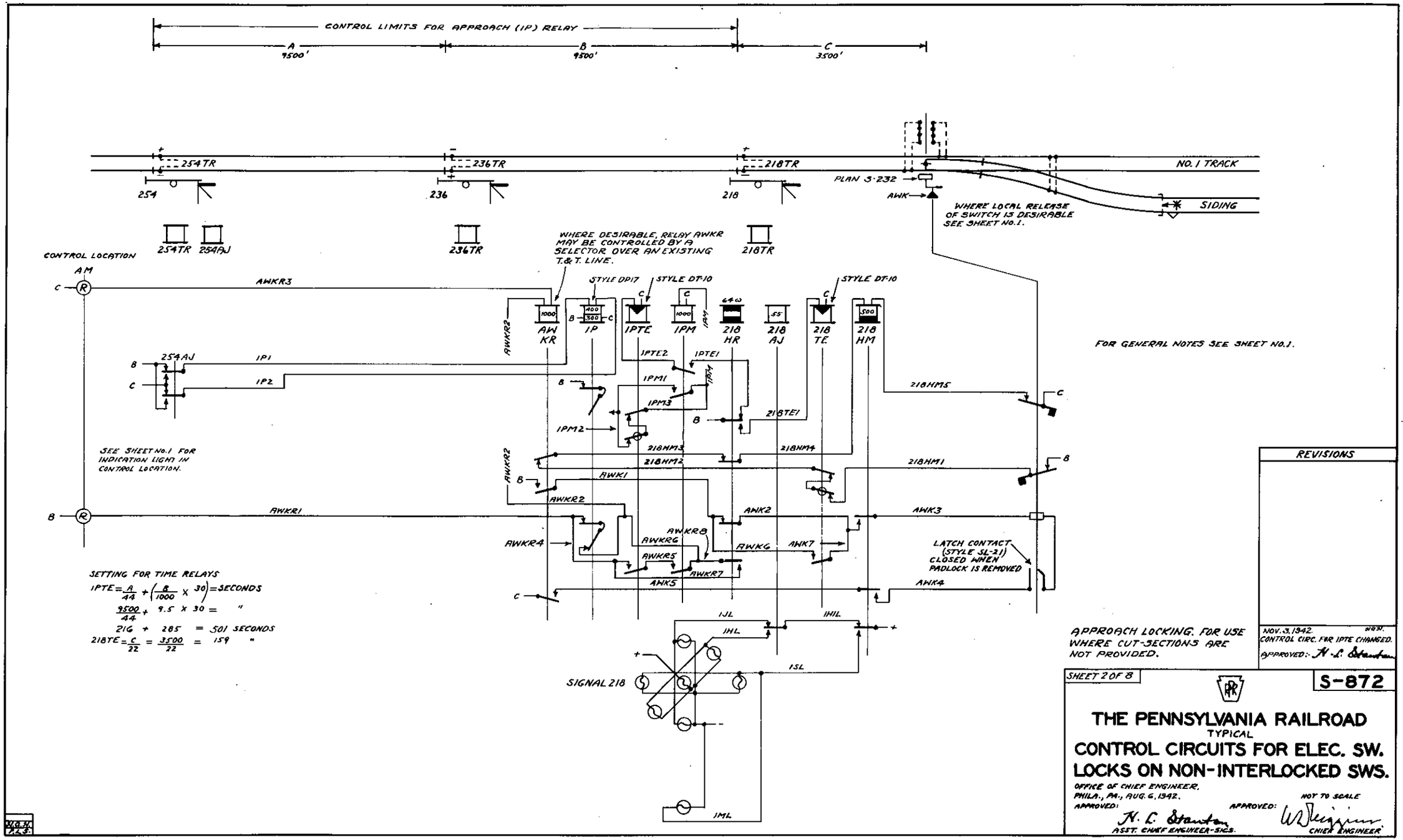
CONTROL LIMITS FOR APPROACH (IP) RELAY
A 9500'
B 9500'
C 3500'
254TR
236TR
218TR
254
236
218
PLAN S-232
AWK
NO. 1 TRACK
SIDING
WHERE LOCAL RELEASE OF SWITCH IS DESIRABLE SEE SHEET No. 1.
254TR 254AJ
236TR
218TR
CONTROL LOCATION
AM
WHERE DESIRABLE, RELAY AWKR MAY BE CONTROLLED BY A SELECTOR OVER AN EXISTING T.&T. LINE.
STYLE DP17
STYLE DT-10
STYLE DT-10
AWKR3
AWKR2
AW KR
IP
IPTE
IPM
218 HR
218 AJ
218 TE
218 HM
FOR GENERAL NOTES SEE SHEET No. 1.
254AJ
IP1
IP2
IPTE2
IPTE1
IPM1
IPM3
IPM2
218TE1
218HM5
218HM3
218HM4
218HM2
218HM1
AWK1
AWKR1
AWK2
AWK3
AWKR4
AWKR8
AWKR6
AWK6
AWK7
AWKR5
AWKR7
AWK5
AWK4
LATCH CONTACT (STYLE SL-21) CLOSED WHEN PADLOCK IS REMOVED
SEE SHEET No. 1 FOR INDICATION LIGHT IN CONTROL LOCATION.
SETTING FOR TIME RELAYS
IPTE = A/44 + (B/1000 X 30) = SECONDS
9500/44 + 9.5 X 30 = "
216 + 285 = 501 SECONDS
218TE = C/22 = 3500/22 = 159 "
IJL
IHL
IHIL
ISL
IML
SIGNAL 218
APPROACH LOCKING. FOR USE WHERE CUT-SECTIONS ARE NOT PROVIDED.
REVISIONS
NOV. 3, 1942. W.G.N.
CONTROL CIRC. FOR IPTE CHANGED.
APPROVED:- N. C. Stanton
SHEET 2 OF 8
S-872
THE PENNSYLVANIA RAILROAD
TYPICAL
CONTROL CIRCUITS FOR ELEC. SW. LOCKS ON NON-INTERLOCKED SWS.
OFFICE OF CHIEF ENGINEER,
PHILA., PA., AUG. 6, 1942.
NOT TO SCALE
APPROVED: N. C. Stanton ASST. CHIEF ENGINEER-SIGS.
APPROVED: W. Sheppard CHIEF ENGINEER
W.G.N. F.L.S.

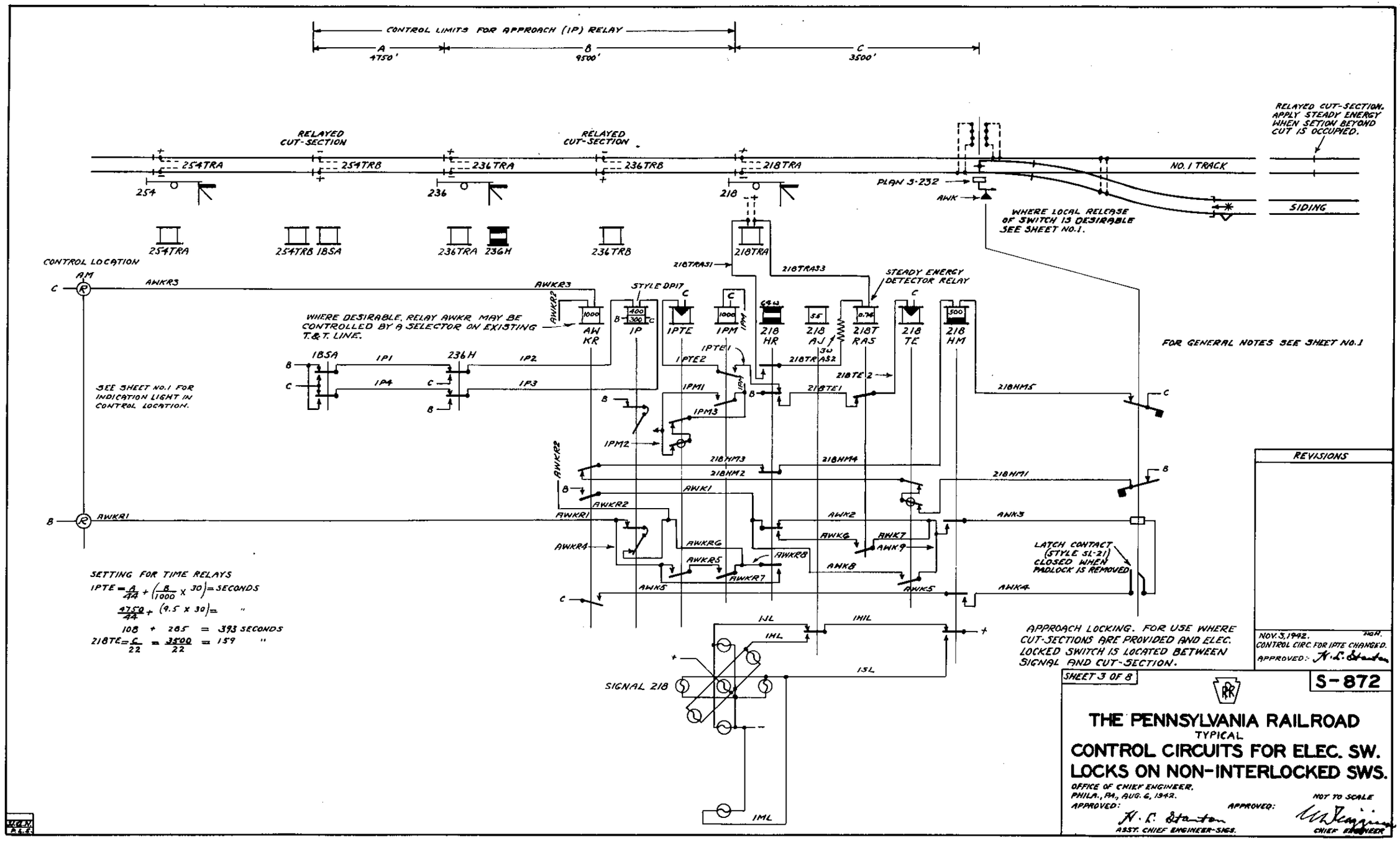
CONTROL LIMITS FOR APPROACH (1P) RELAY
A 4750'
B 9500'
C 3500'
RELAYED CUT-SECTION
254TRA
254TRB
236TRA
236TRB
218TRA
254
236
218
PLAN S-232
AWK
NO. 1 TRACK
SIDING
RELAYED CUT-SECTION. APPLY STEADY ENERGY WHEN SECTION BEYOND CUT IS OCCUPIED.
WHERE LOCAL RELEASE OF SWITCH IS DESIRABLE SEE SHEET NO. 1.
254TRA
254TRB 1BSA
236TRA 236H
236TRB
218TRA
CONTROL LOCATION
AM
AWKR3
STYLE DP17
STEADY ENERGY DETECTOR RELAY
WHERE DESIRABLE, RELAY AWKR MAY BE CONTROLLED BY A SELECTOR ON EXISTING T.&T. LINE.
AW KR
1P
1PTE
1PM
218 HR
218 AJ
218T RAS
218 TE
218 HM
FOR GENERAL NOTES SEE SHEET NO. 1
SEE SHEET NO. 1 FOR INDICATION LIGHT IN CONTROL LOCATION.
LATCH CONTACT (STYLE SL-21) CLOSED WHEN PADLOCK IS REMOVED
SETTING FOR TIME RELAYS
1PTE = A/44 + (B/1000 x 30) = SECONDS
4750/44 + (9.5 x 30) = "
108 + 285 = 393 SECONDS
218TE = C/22 = 3500/22 = 159 "
SIGNAL 218
APPROACH LOCKING. FOR USE WHERE CUT-SECTIONS ARE PROVIDED AND ELEC. LOCKED SWITCH IS LOCATED BETWEEN SIGNAL AND CUT-SECTION.
REVISIONS
NOV. 3, 1942. H.A.R.
CONTROL CIRC. FOR 1PTE CHANGED.
APPROVED: N. C. Stanton
SHEET 3 OF 8
S-872
THE PENNSYLVANIA RAILROAD
TYPICAL
CONTROL CIRCUITS FOR ELEC. SW. LOCKS ON NON-INTERLOCKED SWS.
OFFICE OF CHIEF ENGINEER.
PHILA., PA., AUG. 6, 1942.
APPROVED:
N. C. Stanton
ASST. CHIEF ENGINEER-SIGS.
APPROVED:
CHIEF ENGINEER
NOT TO SCALE

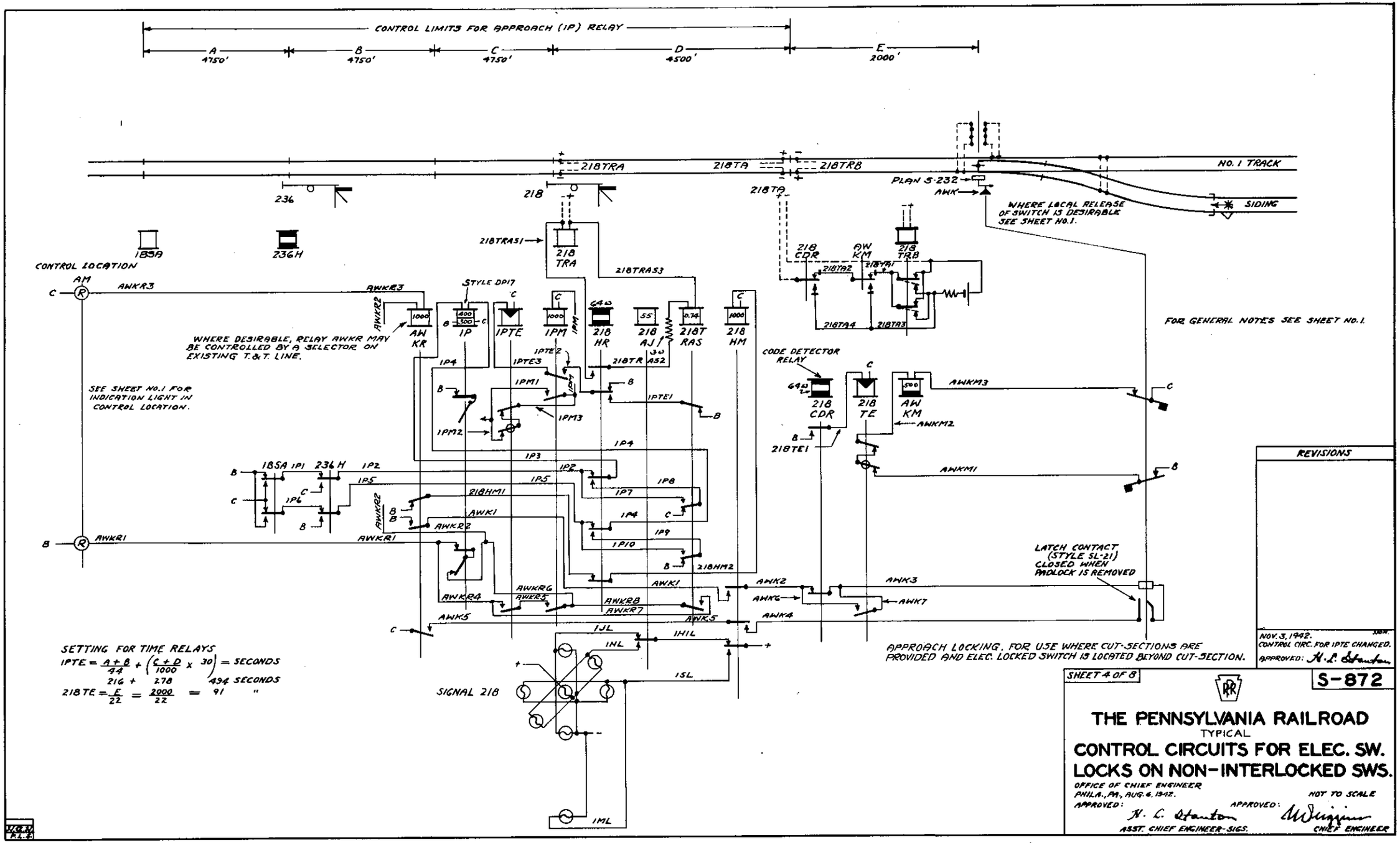
CONTROL LIMITS FOR APPROACH (IP) RELAY
A 4750'
B 4750'
C 4750'
D 4500'
E 2000'
NO. 1 TRACK
SIDING
PLAN S-232
AWK
WHERE LOCAL RELEASE OF SWITCH IS DESIRABLE SEE SHEET NO. 1.
FOR GENERAL NOTES SEE SHEET NO. 1.
CONTROL LOCATION
SEE SHEET NO. 1 FOR INDICATION LIGHT IN CONTROL LOCATION.
WHERE DESIRABLE, RELAY AWKR MAY BE CONTROLLED BY A SELECTOR ON EXISTING T. & T. LINE.
STYLE DP17
CODE DETECTOR RELAY
LATCH CONTACT (STYLE SL-21) CLOSED WHEN PADLOCK IS REMOVED
APPROACH LOCKING. FOR USE WHERE CUT-SECTIONS ARE PROVIDED AND ELEC. LOCKED SWITCH IS LOCATED BEYOND CUT-SECTION.
SIGNAL 218
SETTING FOR TIME RELAYS
IPTE = (A+B)/44 + ((C+D)/1000 x 30) = SECONDS
216 + 278 494 SECONDS
218TE = E/22 = 2000/22 = 91 "
REVISIONS
NOV. 3, 1942. JBM.
CONTROL CIRC. FOR IPTE CHANGED.
APPROVED: N. C. Stanton
SHEET 4 OF 8
S-872
THE PENNSYLVANIA RAILROAD
TYPICAL
CONTROL CIRCUITS FOR ELEC. SW. LOCKS ON NON-INTERLOCKED SWS.
OFFICE OF CHIEF ENGINEER
PHILA., PA., AUG. 6, 1942.
NOT TO SCALE
APPROVED: N. C. Stanton
ASST. CHIEF ENGINEER-SIGS.
APPROVED: W. Wiggins
CHIEF ENGINEER

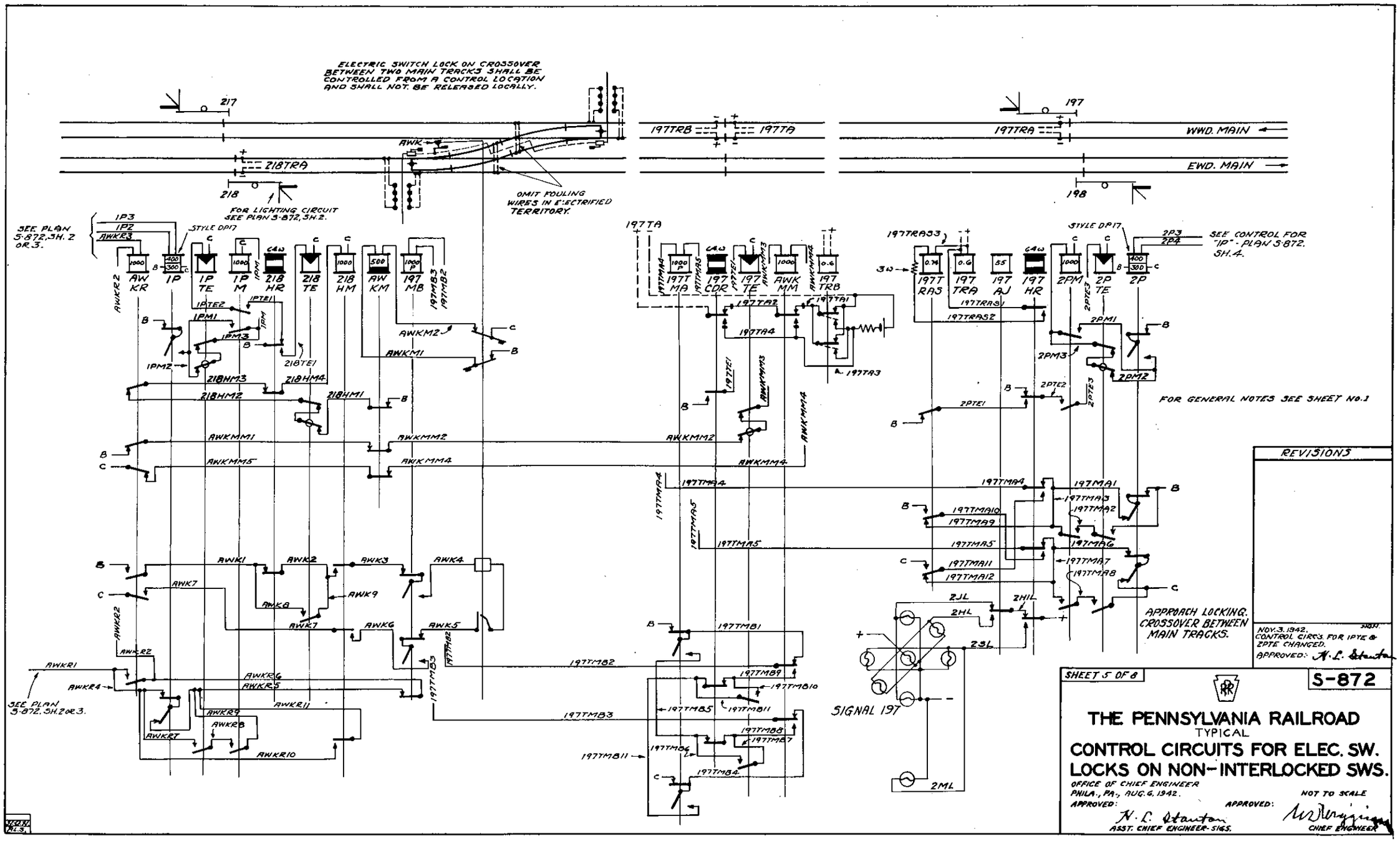
ELECTRIC SWITCH LOCK ON CROSSOVER BETWEEN TWO MAIN TRACKS SHALL BE CONTROLLED FROM A CONTROL LOCATION AND SHALL NOT BE RELEASED LOCALLY.
217
197
218TRA
197TRB
197TA
197TRA
WWD. MAIN
EWD. MAIN
218
198
AWK
OMIT FOULING WIRES IN ELECTRIFIED TERRITORY.
FOR LIGHTING CIRCUIT SEE PLAN S-872, SH. 2.
SEE PLAN S-872, SH. 2 OR 3.
SEE CONTROL FOR "IP" - PLAN S-872, SH. 4.
FOR GENERAL NOTES SEE SHEET NO. 1
APPROACH LOCKING. CROSSOVER BETWEEN MAIN TRACKS.
SIGNAL 197
SEE PLAN S-872, SH. 2 OR 3.
REVISIONS
NOV. 3, 1942. CONTROL CIRCS. FOR 1PTE & 2PTE CHANGED.
APPROVED: N. L. Stanton
SHEET 5 OF 8
S-872
THE PENNSYLVANIA RAILROAD
TYPICAL
CONTROL CIRCUITS FOR ELEC. SW. LOCKS ON NON-INTERLOCKED SWS.
OFFICE OF CHIEF ENGINEER
PHILA., PA., AUG. 6, 1942.
APPROVED:
N. L. Stanton
ASST. CHIEF ENGINEER-SIGS.
NOT TO SCALE
APPROVED:
CHIEF ENGINEER

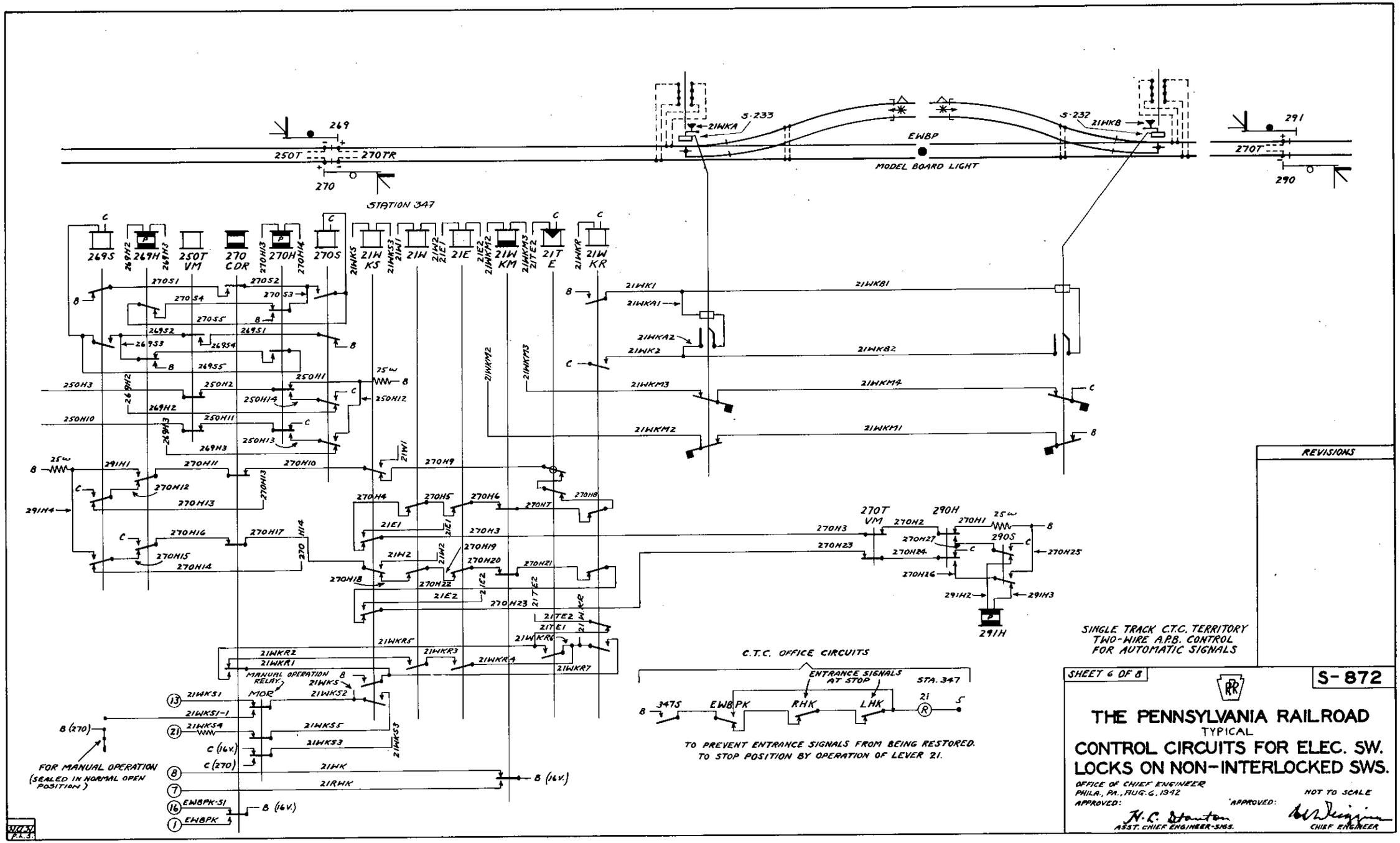
269
250T
270TR
270
STATION 347
S-233
21WKA
EWBP
MODEL BOARD LIGHT
S-232
21WKB
291
270T
290
269S
269H
250T VM
270 CDR
270H
270S
21W KS
21W
21E
21W KM
21T E
21W KR
270H3
270H4
270H5
270H6
270H7
270H8
270H9
270H10
270H11
270H12
270H13
270H14
270H15
270H16
270H17
270H18
270H19
270H20
270H21
270H22
270H23
270H24
270H25
270H26
270H27
290H
290S
291H
291H1
291H2
291H3
291H4
21WKR1
21WKR2
21WKR3
21WKR4
21WKR5
21WKR6
21WKR7
21WKS1
21WKS2
21WKS3
21WKS4
21WKS5
21WKS1-1
MOR
MANUAL OPERATION RELAY
FOR MANUAL OPERATION (SEALED IN NORMAL OPEN POSITION)
21WK
21RWK
EWBPK-S1
EWBPK
C.T.C. OFFICE CIRCUITS
ENTRANCE SIGNALS AT STOP
STA. 347
347S
EWBPK
RHK
LHK
TO PREVENT ENTRANCE SIGNALS FROM BEING RESTORED. TO STOP POSITION BY OPERATION OF LEVER 21.
SINGLE TRACK C.T.C. TERRITORY
TWO-WIRE A.P.B. CONTROL
FOR AUTOMATIC SIGNALS
REVISIONS
SHEET 6 OF 8
S-872
THE PENNSYLVANIA RAILROAD
TYPICAL
CONTROL CIRCUITS FOR ELEC. SW. LOCKS ON NON-INTERLOCKED SWS.
OFFICE OF CHIEF ENGINEER
PHILA., PA., AUG. 6, 1942
NOT TO SCALE
APPROVED:
ASST. CHIEF ENGINEER-SIGS.
APPROVED:
CHIEF ENGINEER

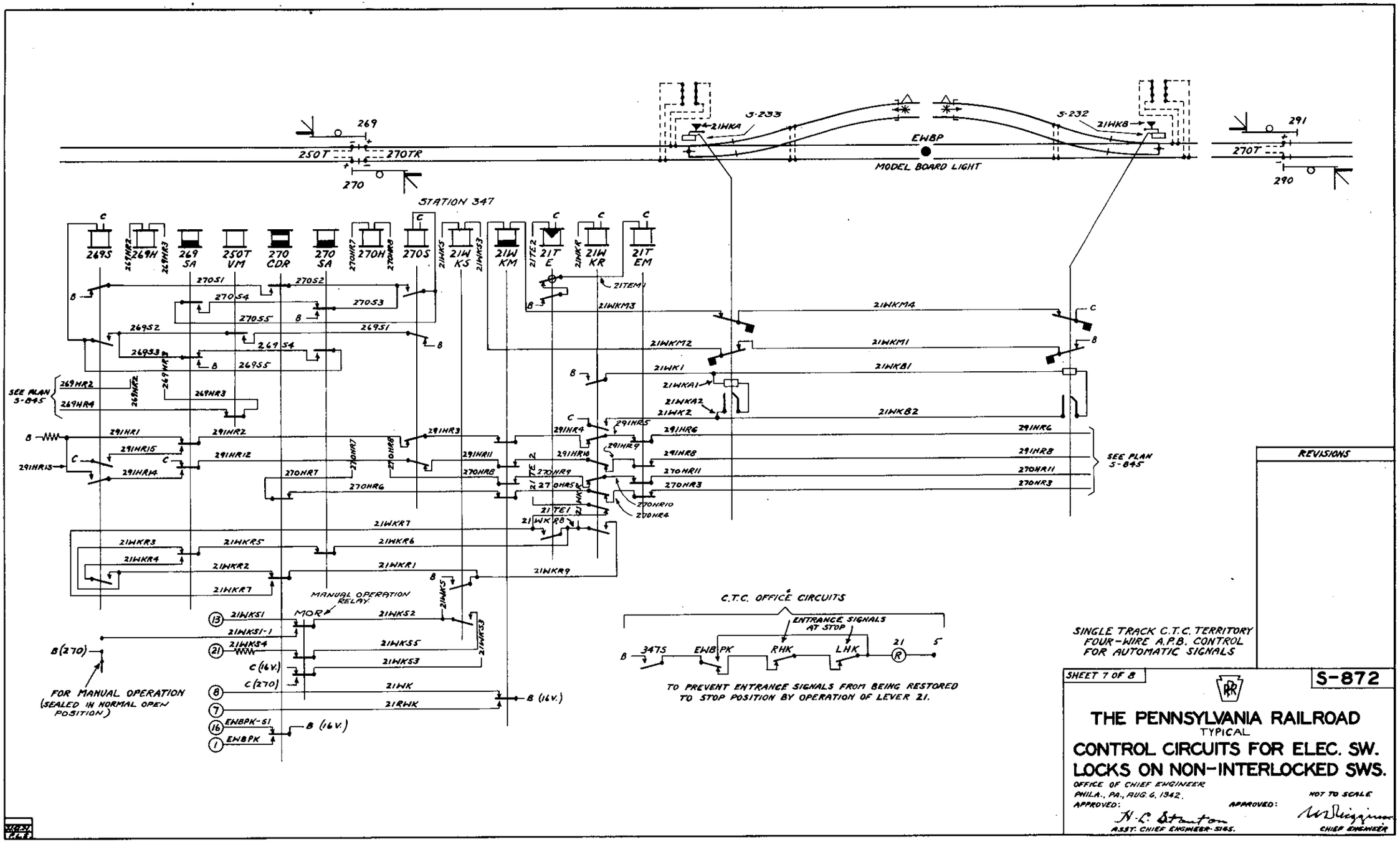
269
250T
270TR
270
STATION 347
S-233
21WKA
EWBP
MODEL BOARD LIGHT
S-232
21WKB
291
270T
290
269S
269H
269 SA
250T VM
270 CDR
270 SA
270H
270S
21W KS
21W KM
21T E
21W KR
21T EM
SEE PLAN S-845
MANUAL OPERATION RELAY
MOR
FOR MANUAL OPERATION (SEALED IN NORMAL OPEN POSITION)
C.T.C. OFFICE CIRCUITS
ENTRANCE SIGNALS AT STOP
347S
EWBPK
RHK
LHK
TO PREVENT ENTRANCE SIGNALS FROM BEING RESTORED TO STOP POSITION BY OPERATION OF LEVER 21.
REVISIONS
SINGLE TRACK C.T.C. TERRITORY
FOUR-WIRE A.P.B. CONTROL
FOR AUTOMATIC SIGNALS
SHEET 7 OF 8
S-872
THE PENNSYLVANIA RAILROAD
TYPICAL
CONTROL CIRCUITS FOR ELEC. SW. LOCKS ON NON-INTERLOCKED SWS.
OFFICE OF CHIEF ENGINEER
PHILA., PA., AUG. 6, 1942.
APPROVED:
ASST. CHIEF ENGINEER-SIGS.
APPROVED:
CHIEF ENGINEER
NOT TO SCALE

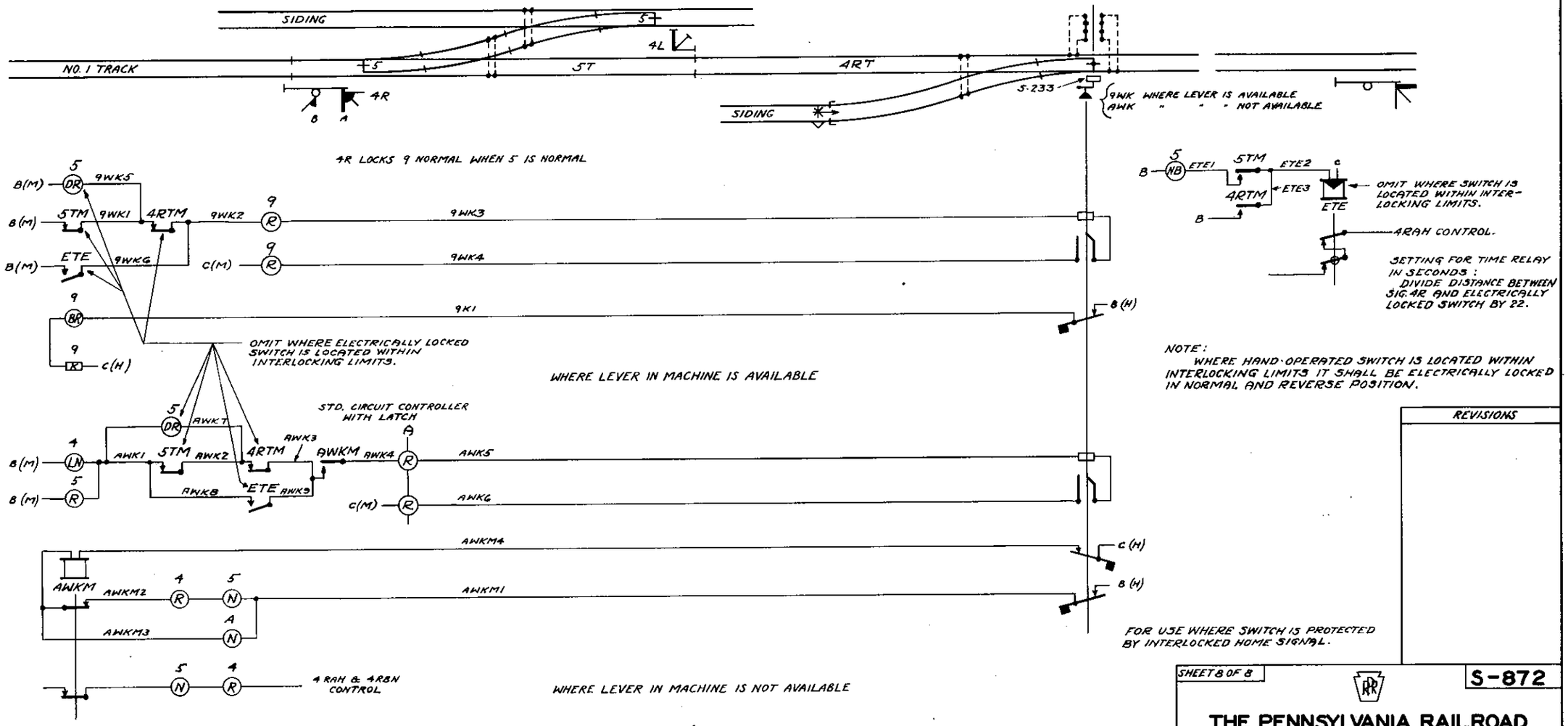

REVISIONS

SHEET 8 OF 8

S-872

THE PENNSYLVANIA RAILROAD

TYPICAL

CONTROL CIRCUITS FOR ELEC. SW. LOCKS ON NON-INTERLOCKED SWS.

OFFICE OF CHIEF ENGINEER

PHILA., PA., AUG. 6, 1942.

NOT TO SCALE

APPROVED: N. C. Stanton
ASST. CHIEF ENGINEER-SIGS.

APPROVED: W. Sheppard
CHIEF ENGINEER

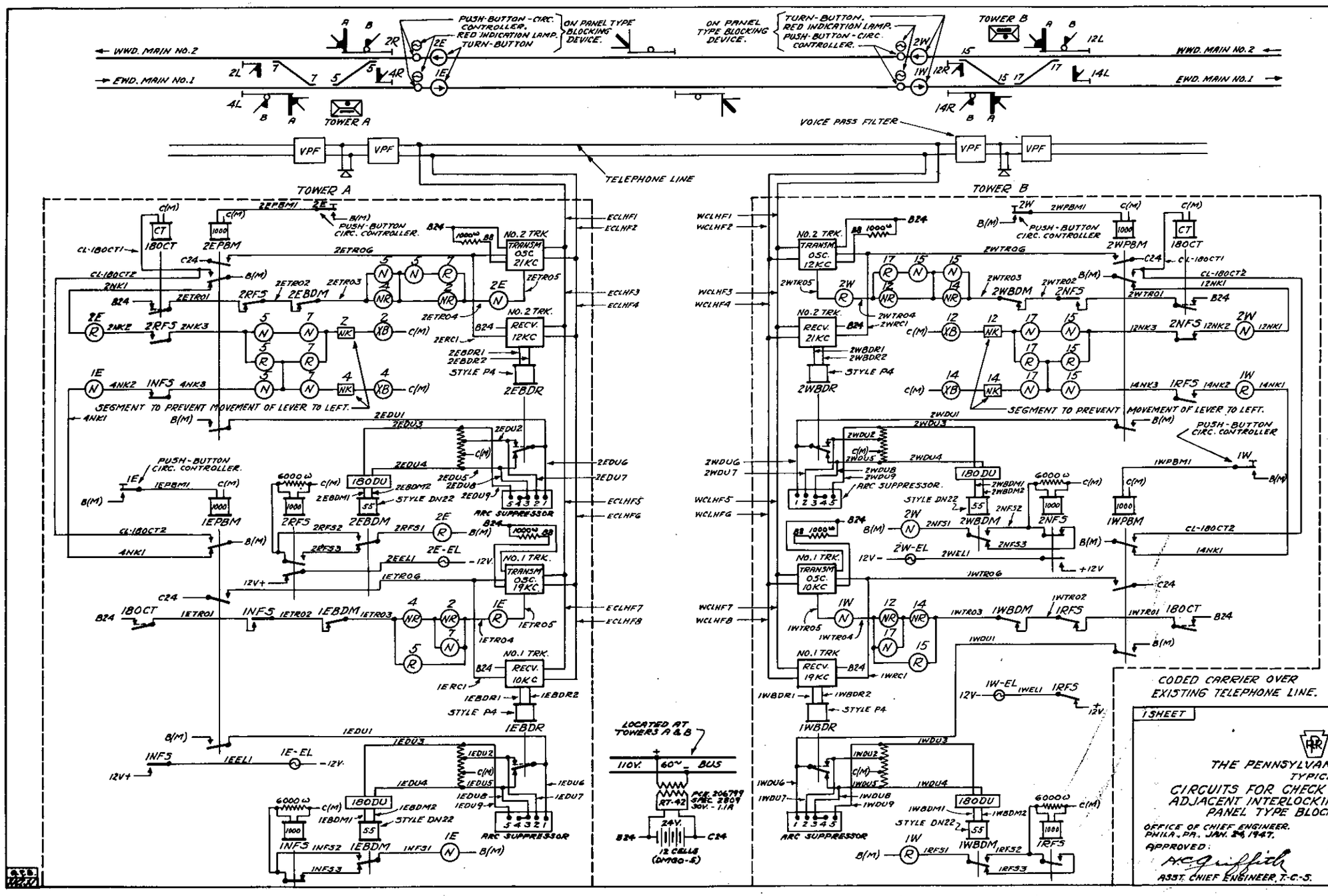
WWD. MAIN NO. 2
EWD. MAIN NO. 1
PUSH-BUTTON-CIRC. CONTROLLER. RED INDICATION LAMP. TURN-BUTTON
ON PANEL TYPE BLOCKING DEVICE.
TURN-BUTTON. RED INDICATION LAMP. PUSH-BUTTON-CIRC. CONTROLLER.
TOWER A
TOWER B
VOICE PASS FILTER
VPF
TELEPHONE LINE
PUSH-BUTTON CIRC. CONTROLLER.
NO. 2 TRK. TRANSM. OSC. 21KC
NO. 2 TRK. RECV. 12KC
NO. 1 TRK. TRANSM. OSC. 19KC
NO. 1 TRK. RECV. 10KC
NO. 2 TRK. TRANSM. OSC. 12KC
NO. 2 TRK. RECV. 21KC
NO. 1 TRK. TRANSM. OSC. 10KC
NO. 1 TRK. RECV. 19KC
STYLE P4
SEGMENT TO PREVENT MOVEMENT OF LEVER TO LEFT.
ARC SUPPRESSOR
STYLE DN22
LOCATED AT TOWERS A & B
110V. 60~ BUS
24V.
12 CELLS (DMGO-5)
CODED CARRIER OVER EXISTING TELEPHONE LINE.
REVISIONS
1 SHEET
S-873
THE PENNSYLVANIA RAILROAD
TYPICAL
CIRCUITS FOR CHECK LOCKING BETWEEN ADJACENT INTERLOCKING STATIONS WITH PANEL TYPE BLOCKING DEVICE.
OFFICE OF CHIEF ENGINEER. PHILA., PA. JAN. 24, 1947.
NOT TO SCALE
APPROVED:
ASST. CHIEF ENGINEER, T.C.S.
CHIEF ENGINEER.

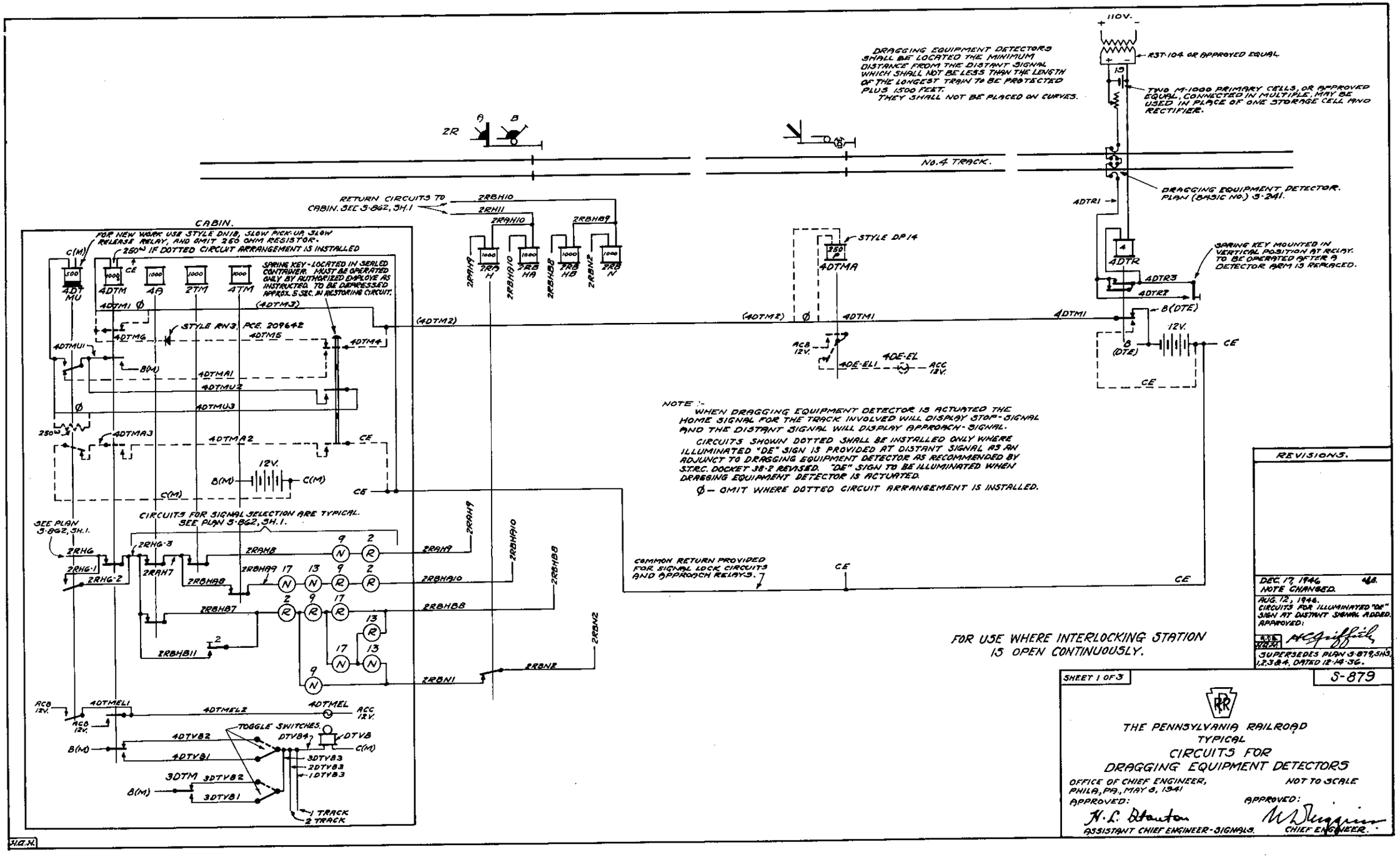
DRAGGING EQUIPMENT DETECTORS SHALL BE LOCATED THE MINIMUM DISTANCE FROM THE DISTANT SIGNAL WHICH SHALL NOT BE LESS THAN THE LENGTH OF THE LONGEST TRAIN TO BE PROTECTED PLUS 1500 FEET. THEY SHALL NOT BE PLACED ON CURVES.
110V.
RST-104 OR APPROVED EQUAL.
TWO M-1000 PRIMARY CELLS, OR APPROVED EQUAL, CONNECTED IN MULTIPLE, MAY BE USED IN PLACE OF ONE STORAGE CELL AND RECTIFIER.
2R
No.4 TRACK.
DRAGGING EQUIPMENT DETECTOR. PLAN (BASIC NO.) S-241.
RETURN CIRCUITS TO CABIN. SEE S-862, SH.1
2RBH10
2RH11
2RAH10
2RBH89
2RAH9
2RBH10
2RBH8
2RBH2
2RBN
STYLE DP14
4DTMA
4DTR1
4DTR
4DTR3
4DTR2
SPRING KEY MOUNTED IN VERTICAL POSITION AT RELAY. TO BE OPERATED AFTER A DETECTOR ARM IS REPLACED.
B(DTE)
12V.
CE
CABIN.
FOR NEW WORK USE STYLE DN18, SLOW PICK-UP SLOW RELEASE RELAY, AND OMIT 250 OHM RESISTOR.
250Ω IF DOTTED CIRCUIT ARRANGEMENT IS INSTALLED
SPRING KEY - LOCATED IN SEALED CONTAINER. MUST BE OPERATED DAILY BY AUTHORIZED EMPLOYE AS INSTRUCTED. TO BE DEPRESSED APPROX. 5 SEC. IN RESTORING CIRCUIT.
4DTMU
4DTM
4A
2TM
4TM
STYLE RN3, PCE. 209642
4DTMU1
4DTMA1
4DTMU2
4DTMU3
4DTMA3
4DTMA2
B(M)
C(M)
CIRCUITS FOR SIGNAL SELECTION ARE TYPICAL. SEE PLAN S-862, SH.1.
SEE PLAN S-862, SH.1.
2RHG
2RHG-1
2RHG-2
2RHG-3
2RAH7
2RAH8
2RBH89
2RBH88
2RBH87
2RBH811
2RAH9
2RBH10
2RBH8
2RBN2
2RBN1
ACB 12V.
4DTMEL1
4DTMEL2
4DTMEL
ACC 12V.
TOGGLE SWITCHES.
4DTV82
4DTV81
DTV84
DTV8
3DTV83
2DTV83
1DTV83
3DTM
3DTV82
3DTV81
1 TRACK
2 TRACK
4DTMA
4DE-EL
4DE-EL1
NOTE :-
WHEN DRAGGING EQUIPMENT DETECTOR IS ACTUATED THE HOME SIGNAL FOR THE TRACK INVOLVED WILL DISPLAY STOP-SIGNAL AND THE DISTANT SIGNAL WILL DISPLAY APPROACH-SIGNAL.
CIRCUITS SHOWN DOTTED SHALL BE INSTALLED ONLY WHERE ILLUMINATED "DE" SIGN IS PROVIDED AT DISTANT SIGNAL AS AN ADJUNCT TO DRAGGING EQUIPMENT DETECTOR AS RECOMMENDED BY S.T.R.C. DOCKET 38-2 REVISED. "DE" SIGN TO BE ILLUMINATED WHEN DRAGGING EQUIPMENT DETECTOR IS ACTUATED.
Ø — OMIT WHERE DOTTED CIRCUIT ARRANGEMENT IS INSTALLED.
COMMON RETURN PROVIDED FOR SIGNAL LOCK CIRCUITS AND APPROACH RELAYS.
FOR USE WHERE INTERLOCKING STATION IS OPEN CONTINUOUSLY.
REVISIONS.
DEC. 17, 1946. NOTE CHANGED.
AUG. 12, 1946. CIRCUITS FOR ILLUMINATED "DE" SIGN AT DISTANT SIGNAL ADDED. APPROVED:
SUPERSEDES PLAN S-879, SHS. 1,2,3 & 4, DATED 12-14-36.
SHEET 1 OF 3
S-879
THE PENNSYLVANIA RAILROAD
TYPICAL
CIRCUITS FOR
DRAGGING EQUIPMENT DETECTORS
OFFICE OF CHIEF ENGINEER, PHILA., PA., MAY 8, 1941
NOT TO SCALE
APPROVED:
ASSISTANT CHIEF ENGINEER-SIGNALS.
APPROVED:
CHIEF ENGINEER.

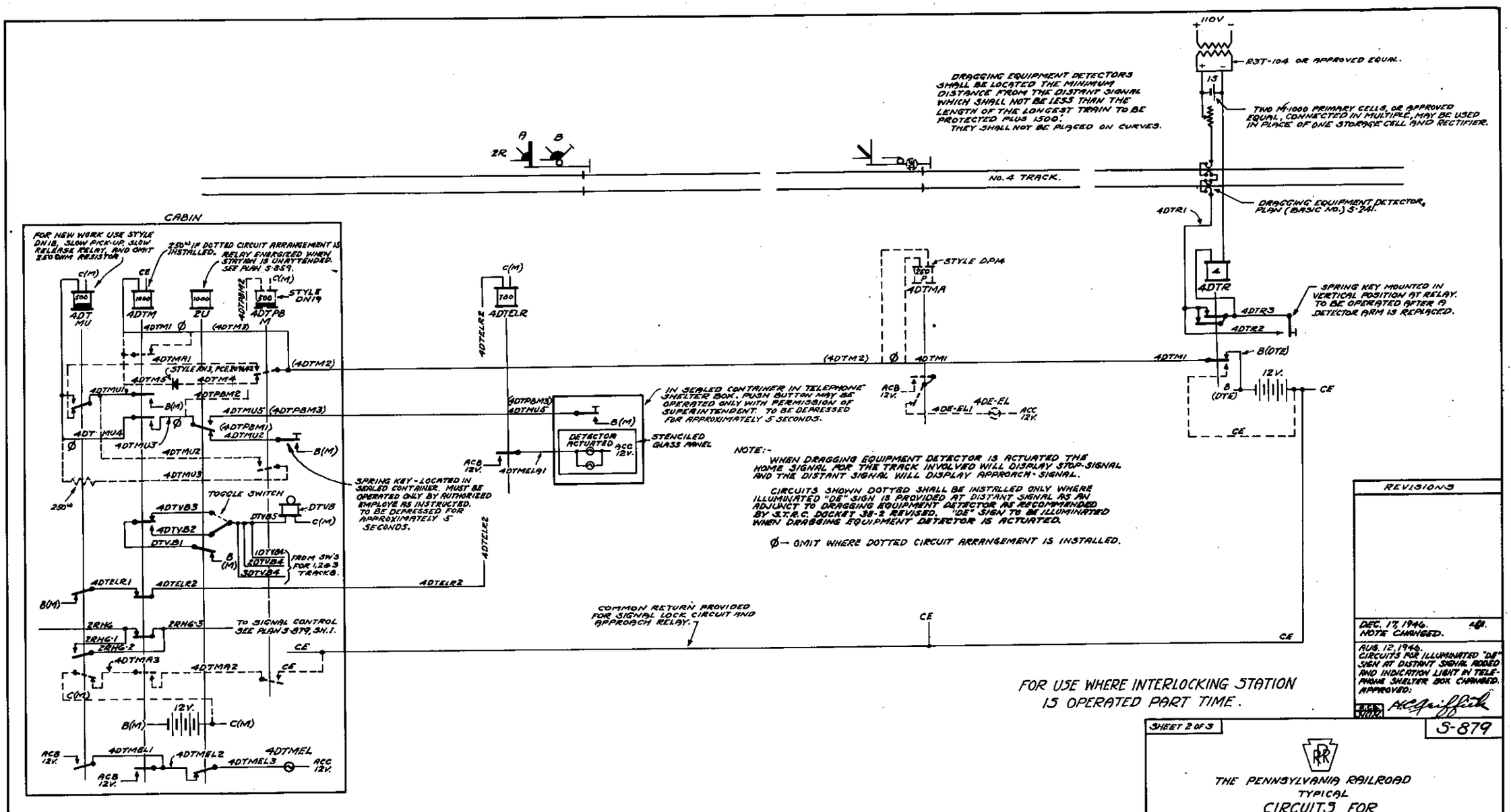
CABIN
FOR NEW WORK USE STYLE DN18, SLOW PICK-UP, SLOW RELEASE RELAY AND OMIT 250 OHM RESISTOR.
250Ω IF DOTTED CIRCUIT ARRANGEMENT IS INSTALLED.
RELAY ENERGIZED WHEN STATION IS UNATTENDED. SEE PLAN S-859.
STYLE DN19
4DTMU
4DTM
2U
4DTPB M
4DTMU1
4DTMU2
4DTMU3
4DTMU4
4DTMU5
4DTMA1
4DTMA2
4DTMA3
4DTMA4
4DTMA5
4DTPBM1
4DTPBM2
4DTPBM3
TOGGLE SWITCH
4DTVB1
4DTVB2
4DTVB3
4DTVB4
4DTVB5
4DTVB
FROM SW'S FOR 1,2&3 TRACKS.
4DTELR1
4DTELR2
2RHG
2RHG-1
2RHG-2
2RHG-3
TO SIGNAL CONTROL SEE PLAN S-879, SH. 1.
4DTMEL1
4DTMEL2
4DTMEL3
4DTMEL
ACB 12V.
ACC 12V.
12V.
SPRING KEY - LOCATED IN SEALED CONTAINER. MUST BE OPERATED ONLY BY AUTHORIZED EMPLOYE AS INSTRUCTED. TO BE DEPRESSED FOR APPROXIMATELY 5 SECONDS.
4DTELR
4DTELR2
4DTMEL91
IN SEALED CONTAINER IN TELEPHONE SHELTER BOX. PUSH BUTTON MAY BE OPERATED ONLY WITH PERMISSION OF SUPERINTENDENT. TO BE DEPRESSED FOR APPROXIMATELY 5 SECONDS.
DETECTOR ACTUATED
STENCILED GLASS PANEL
COMMON RETURN PROVIDED FOR SIGNAL LOCK CIRCUIT AND APPROACH RELAY.
2R
No. 4 TRACK.
DRAGGING EQUIPMENT DETECTORS SHALL BE LOCATED THE MINIMUM DISTANCE FROM THE DISTANT SIGNAL WHICH SHALL NOT BE LESS THAN THE LENGTH OF THE LONGEST TRAIN TO BE PROTECTED PLUS 1500'. THEY SHALL NOT BE PLACED ON CURVES.
110V
R3T-104 OR APPROVED EQUAL.
TWO M-1000 PRIMARY CELLS, OR APPROVED EQUAL, CONNECTED IN MULTIPLE, MAY BE USED IN PLACE OF ONE STORAGE CELL AND RECTIFIER.
DRAGGING EQUIPMENT DETECTOR, PLAN (BASIC NO.) S-241.
4DTR1
4DTR
4DTR2
4DTR3
SPRING KEY MOUNTED IN VERTICAL POSITION AT RELAY. TO BE OPERATED AFTER A DETECTOR ARM IS REPLACED.
STYLE DPM
4DTMA
4DE-EL1
4DE-EL
B(DTE)
CE
NOTE:-
WHEN DRAGGING EQUIPMENT DETECTOR IS ACTUATED THE HOME SIGNAL FOR THE TRACK INVOLVED WILL DISPLAY STOP-SIGNAL AND THE DISTANT SIGNAL WILL DISPLAY APPROACH-SIGNAL.
CIRCUITS SHOWN DOTTED SHALL BE INSTALLED ONLY WHERE ILLUMINATED "DE" SIGN IS PROVIDED AT DISTANT SIGNAL AS AN ADJUNCT TO DRAGGING EQUIPMENT DETECTOR AS RECOMMENDED BY S.T.R.C. DOCKET 38-3 REVISED. "DE" SIGN TO BE ILLUMINATED WHEN DRAGGING EQUIPMENT DETECTOR IS ACTUATED.
Ø— OMIT WHERE DOTTED CIRCUIT ARRANGEMENT IS INSTALLED.
FOR USE WHERE INTERLOCKING STATION IS OPERATED PART TIME.
REVISIONS
DEC. 17, 1946. NOTE CHANGED.
AUG. 12, 1946. CIRCUITS FOR ILLUMINATED "DE" SIGN AT DISTANT SIGNAL ADDED AND INDICATION LIGHT IN TELEPHONE SHELTER BOX CHANGED.
APPROVED:
SHEET 2 OF 3
S-879
THE PENNSYLVANIA RAILROAD
TYPICAL
CIRCUITS FOR
DRAGGING EQUIPMENT DETECTORS
OFFICE OF CHIEF ENGINEER, PHILA., PA., MAY 8, 1941.
NOT TO SCALE
APPROVED:
ASSISTANT CHIEF ENGINEER-SIGNALS
CHIEF ENGINEER.
H.G.M.

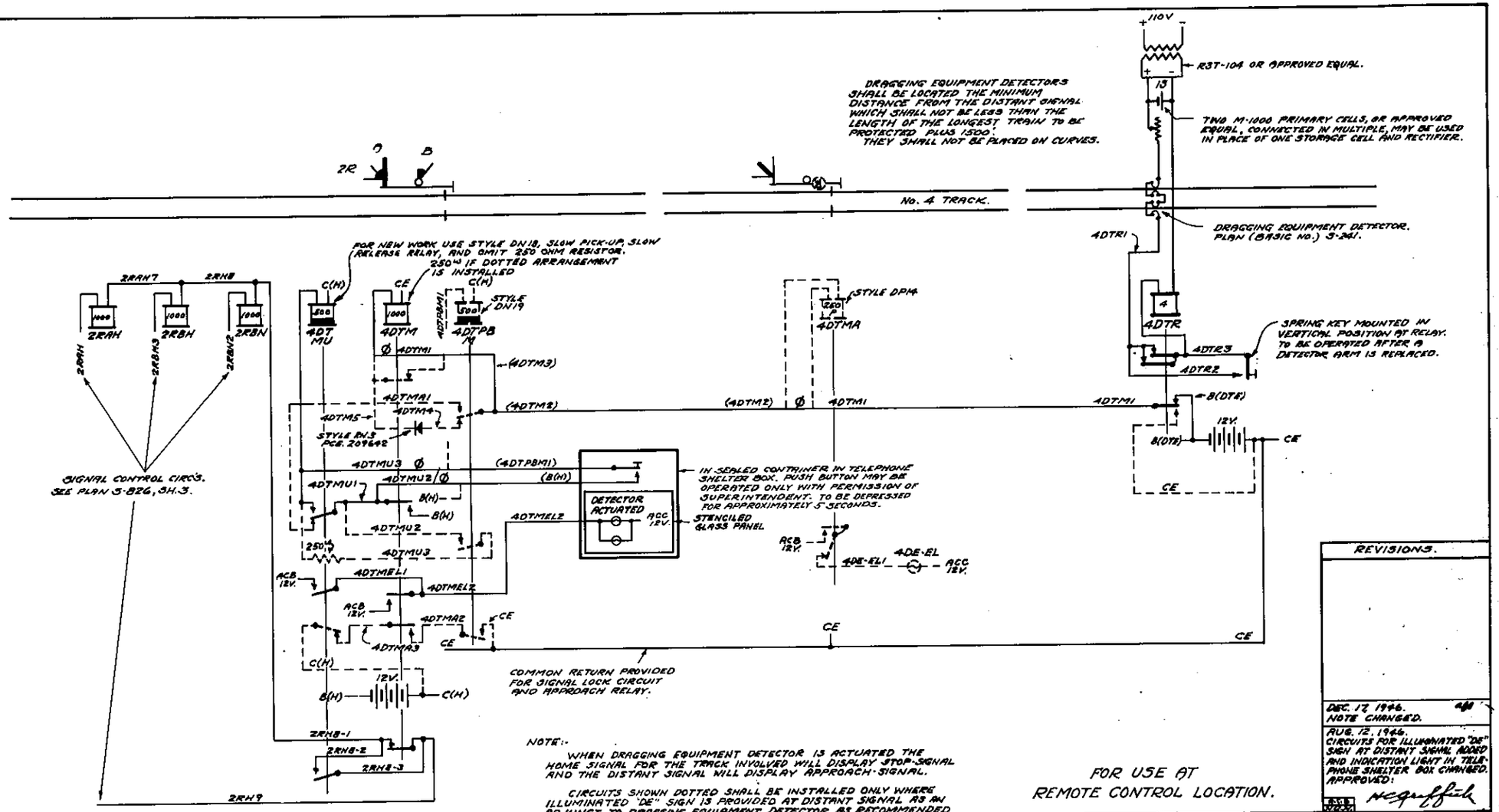

NOTE:-

WHEN DRAGGING EQUIPMENT DETECTOR IS ACTUATED THE HOME SIGNAL FOR THE TRACK INVOLVED WILL DISPLAY STOP-SIGNAL AND THE DISTANT SIGNAL WILL DISPLAY APPROACH-SIGNAL.

CIRCUITS SHOWN DOTTED SHALL BE INSTALLED ONLY WHERE ILLUMINATED "DE" SIGN IS PROVIDED AT DISTANT SIGNAL AS AN ADJUNCT TO DRAGGING EQUIPMENT DETECTOR AS RECOMMENDED BY S.T.R.C. DOCKET 38-2 REVISED. "DE" SIGN TO BE ILLUMINATED WHEN DRAGGING EQUIPMENT DETECTOR IS ACTUATED.

Ø — OMIT WHERE DOTTED CIRCUIT ARRANGEMENT IS INSTALLED.

FOR USE AT REMOTE CONTROL LOCATION.

REVISIONS.

DEC. 12, 1946. NOTE CHANGED.

AUG. 12, 1946. CIRCUITS FOR ILLUMINATED "DE" SIGN AT DISTANT SIGNAL ADDED AND INDICATION LIGHT IN TELEPHONE SHELTER BOX CHANGED. APPROVED:

SHEET 3 OF 3

5-879

THE PENNSYLVANIA RAILROAD

TYPICAL

CIRCUITS FOR DRAGGING EQUIPMENT DETECTORS

OFFICE OF CHIEF ENGINEER, PHILA., PA., MAY 8, 1941.

NOT TO SCALE

APPROVED: N. L. Stanton, ASSISTANT CHIEF ENGINEER-SIGNALS.

APPROVED: W. Wiggins, CHIEF ENGINEER.

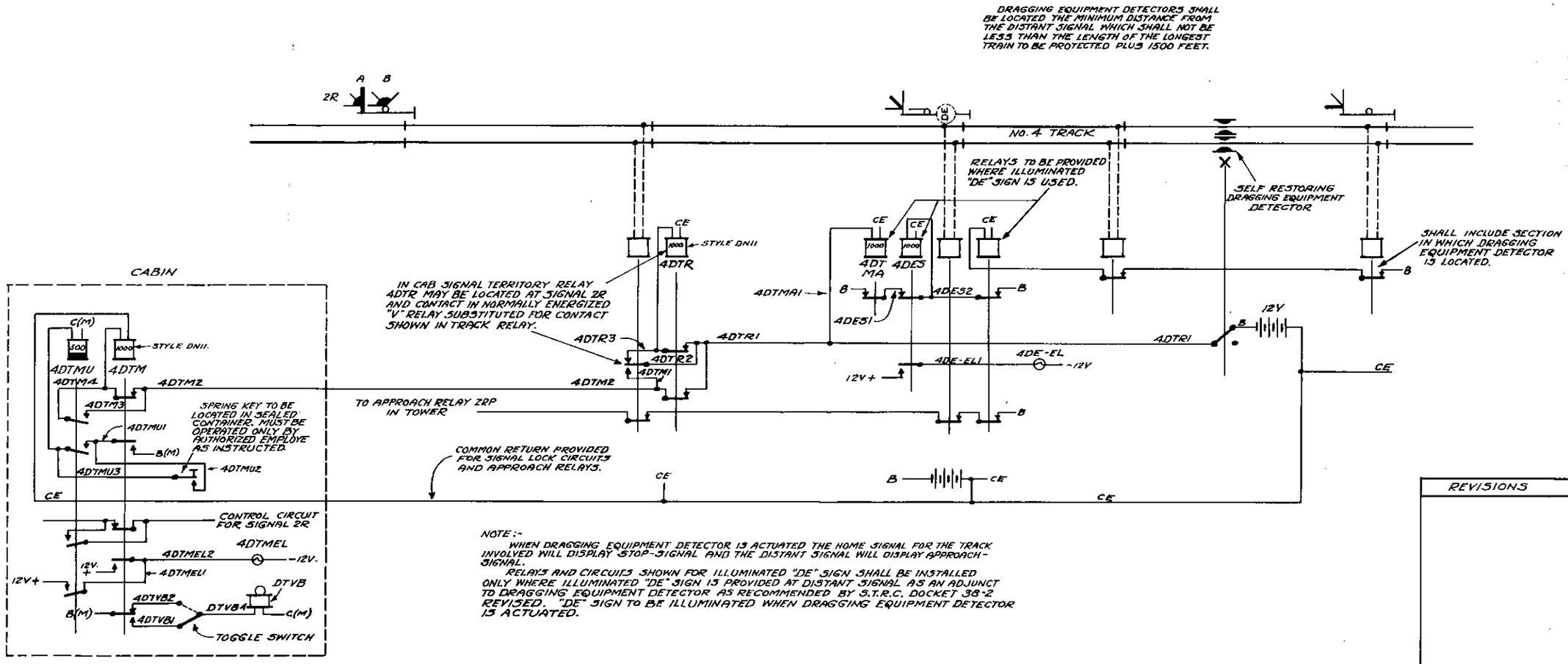

NOTE:-

WHEN DRAGGING EQUIPMENT DETECTOR IS ACTUATED THE HOME SIGNAL FOR THE TRACK INVOLVED WILL DISPLAY STOP-SIGNAL AND THE DISTANT SIGNAL WILL DISPLAY APPROACH-SIGNAL.

RELAYS AND CIRCUITS SHOWN FOR ILLUMINATED "DE" SIGN SHALL BE INSTALLED ONLY WHERE ILLUMINATED "DE" SIGN IS PROVIDED AT DISTANT SIGNAL AS AN ADJUNCT TO DRAGGING EQUIPMENT DETECTOR AS RECOMMENDED BY S.T.R.C. DOCKET 38-2 REVISED. "DE" SIGN TO BE ILLUMINATED WHEN DRAGGING EQUIPMENT DETECTOR IS ACTUATED.

FOR SELF RESTORING TYPE DRAGGING EQUIPMENT DETECTOR

REVISIONS

SHEET 4 OF 4

S-879

THE PENNSYLVANIA RAILROAD

TYPICAL

CIRCUITS FOR DRAGGING EQUIPMENT DETECTORS

OFFICE OF CHIEF ENGINEER.
PHILA., PA., OCT. 5, 1948.

NOT TO SCALE

APPROVED:
ASST. CHIEF ENGINEER, I-C-S.

APPROVED:
CHIEF ENGINEER

M.A.H.

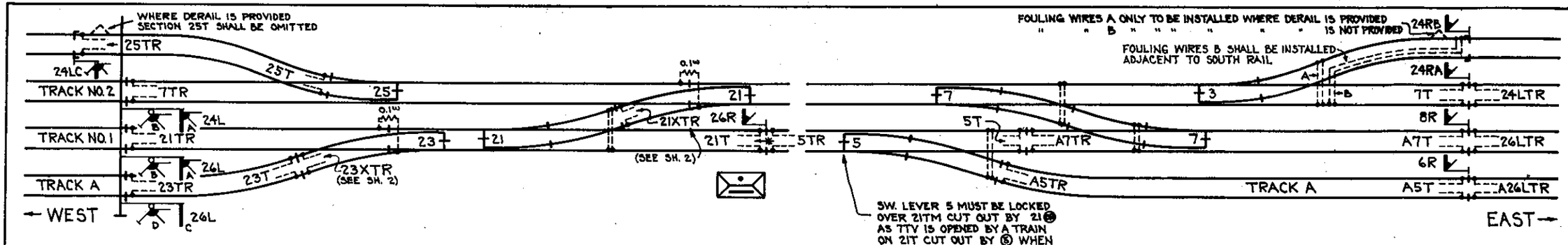

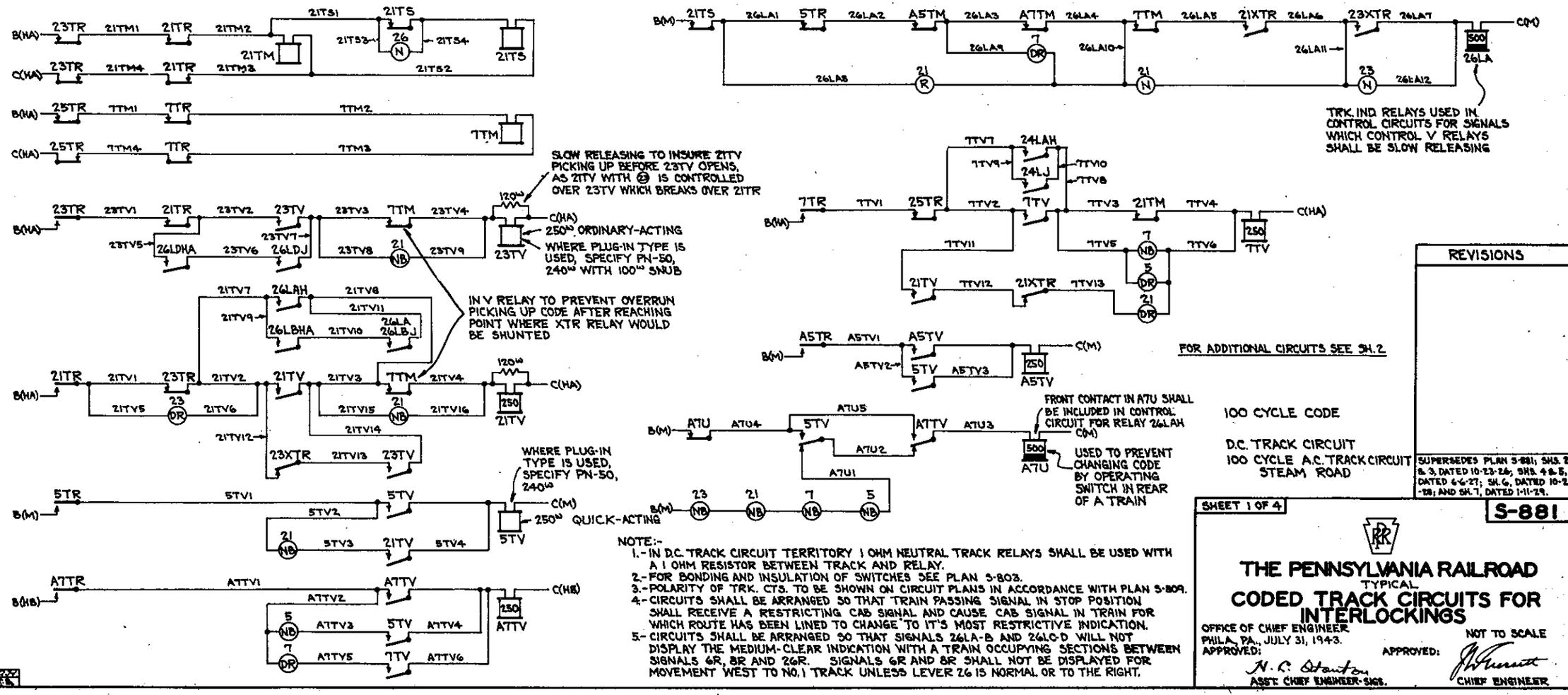

NOTE:-

1.- IN D.C. TRACK CIRCUIT TERRITORY 1 OHM NEUTRAL TRACK RELAYS SHALL BE USED WITH A 1 OHM RESISTOR BETWEEN TRACK AND RELAY.
2.- FOR BONDING AND INSULATION OF SWITCHES SEE PLAN S-803.
3.- POLARITY OF TRK. CTS. TO BE SHOWN ON CIRCUIT PLANS IN ACCORDANCE WITH PLAN S-809.
4.- CIRCUITS SHALL BE ARRANGED SO THAT TRAIN PASSING SIGNAL IN STOP POSITION SHALL RECEIVE A RESTRICTING CAB SIGNAL AND CAUSE CAB SIGNAL IN TRAIN FOR WHICH ROUTE HAS BEEN LINED TO CHANGE TO IT'S MOST RESTRICTIVE INDICATION.
5.- CIRCUITS SHALL BE ARRANGED SO THAT SIGNALS 26LA-B AND 26LC-D WILL NOT DISPLAY THE MEDIUM-CLEAR INDICATION WITH A TRAIN OCCUPYING SECTIONS BETWEEN SIGNALS 6R, 8R AND 26R. SIGNALS 6R AND 8R SHALL NOT BE DISPLAYED FOR MOVEMENT WEST TO NO. 1 TRACK UNLESS LEVER 26 IS NORMAL OR TO THE RIGHT.

REVISIONS

SUPERSEDES PLAN S-881; SHS. 2 & 3, DATED 10-23-26; SHS. 4 & 5, DATED 6-6-27; SH. 6, DATED 10-2-28; AND SH. 7, DATED 1-11-29.

SHEET 1 OF 4

S-881

THE PENNSYLVANIA RAILROAD

TYPICAL

CODED TRACK CIRCUITS FOR INTERLOCKINGS

OFFICE OF CHIEF ENGINEER
PHILA., PA., JULY 31, 1943.

NOT TO SCALE

APPROVED: N. C. Stanton
ASST. CHIEF ENGINEER-SIGS.

APPROVED: J. H. Merritt
CHIEF ENGINEER

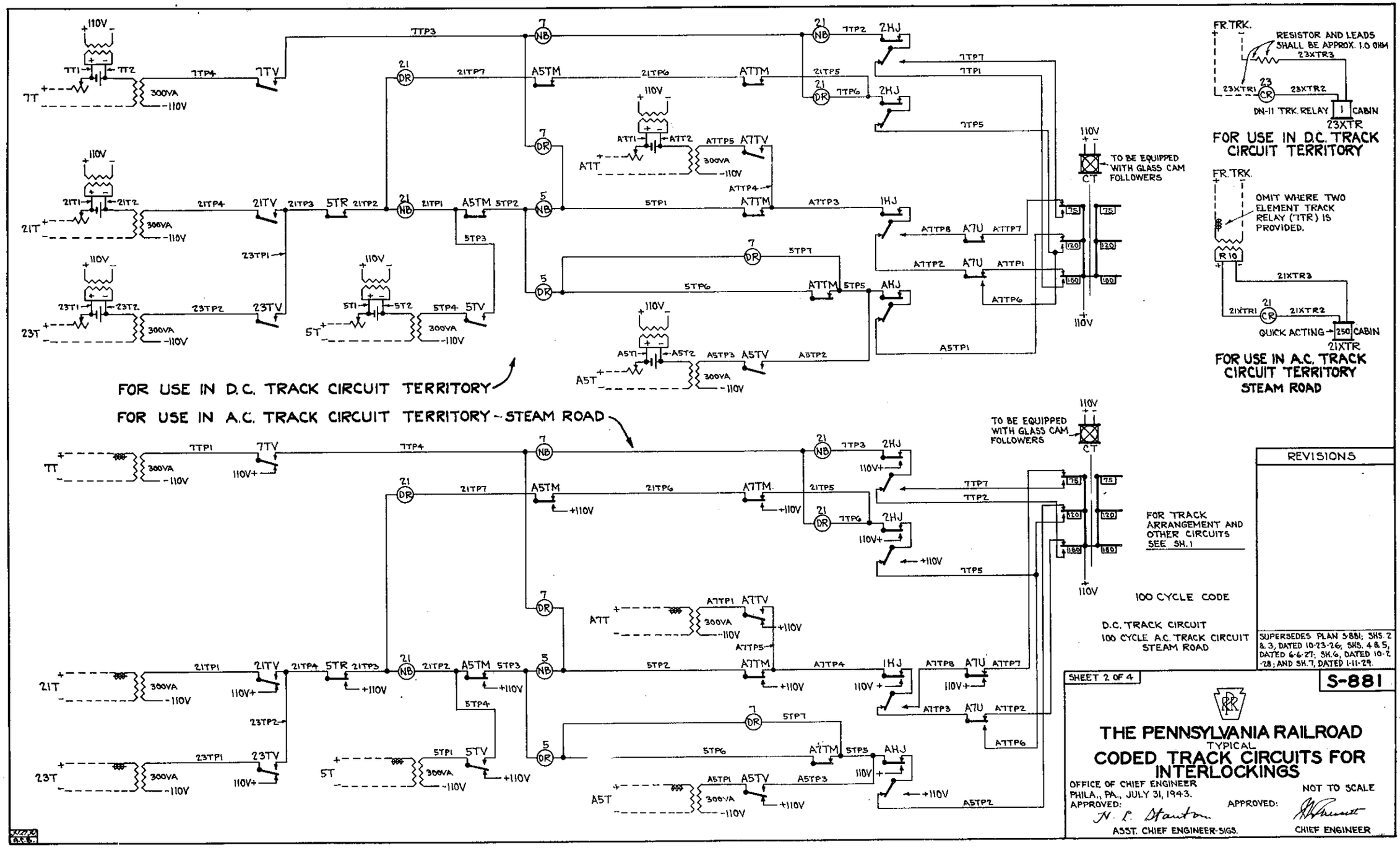
FOR USE IN D.C. TRACK CIRCUIT TERRITORY
FOR USE IN A.C. TRACK CIRCUIT TERRITORY - STEAM ROAD
TO BE EQUIPPED WITH GLASS CAM FOLLOWERS
FR. TRK.
RESISTOR AND LEADS SHALL BE APPROX. 1.0 OHM
23XTR3
23XTR1
23XTR2
DN-11 TRK. RELAY
CABIN
23XTR
FOR USE IN D.C. TRACK CIRCUIT TERRITORY
OMIT WHERE TWO ELEMENT TRACK RELAY ('TTR') IS PROVIDED.
21XTR3
21XTR1
21XTR2
QUICK ACTING
CABIN
21XTR
FOR USE IN A.C. TRACK CIRCUIT TERRITORY STEAM ROAD
FOR TRACK ARRANGEMENT AND OTHER CIRCUITS SEE SH. 1
100 CYCLE CODE
D.C. TRACK CIRCUIT
100 CYCLE A.C. TRACK CIRCUIT STEAM ROAD
REVISIONS
SUPERSEDES PLAN S-881; SHS. 2 & 3, DATED 10-23-26; SHS. 4 & 5, DATED 6-6-27; SH. 6, DATED 10-2-28; AND SH. 7, DATED 1-11-29.
SHEET 2 OF 4
S-881
THE PENNSYLVANIA RAILROAD
TYPICAL
CODED TRACK CIRCUITS FOR INTERLOCKINGS
OFFICE OF CHIEF ENGINEER
PHILA., PA., JULY 31, 1943.
APPROVED:
N. P. Stanton
ASST. CHIEF ENGINEER-SIGS.
NOT TO SCALE
APPROVED:
CHIEF ENGINEER

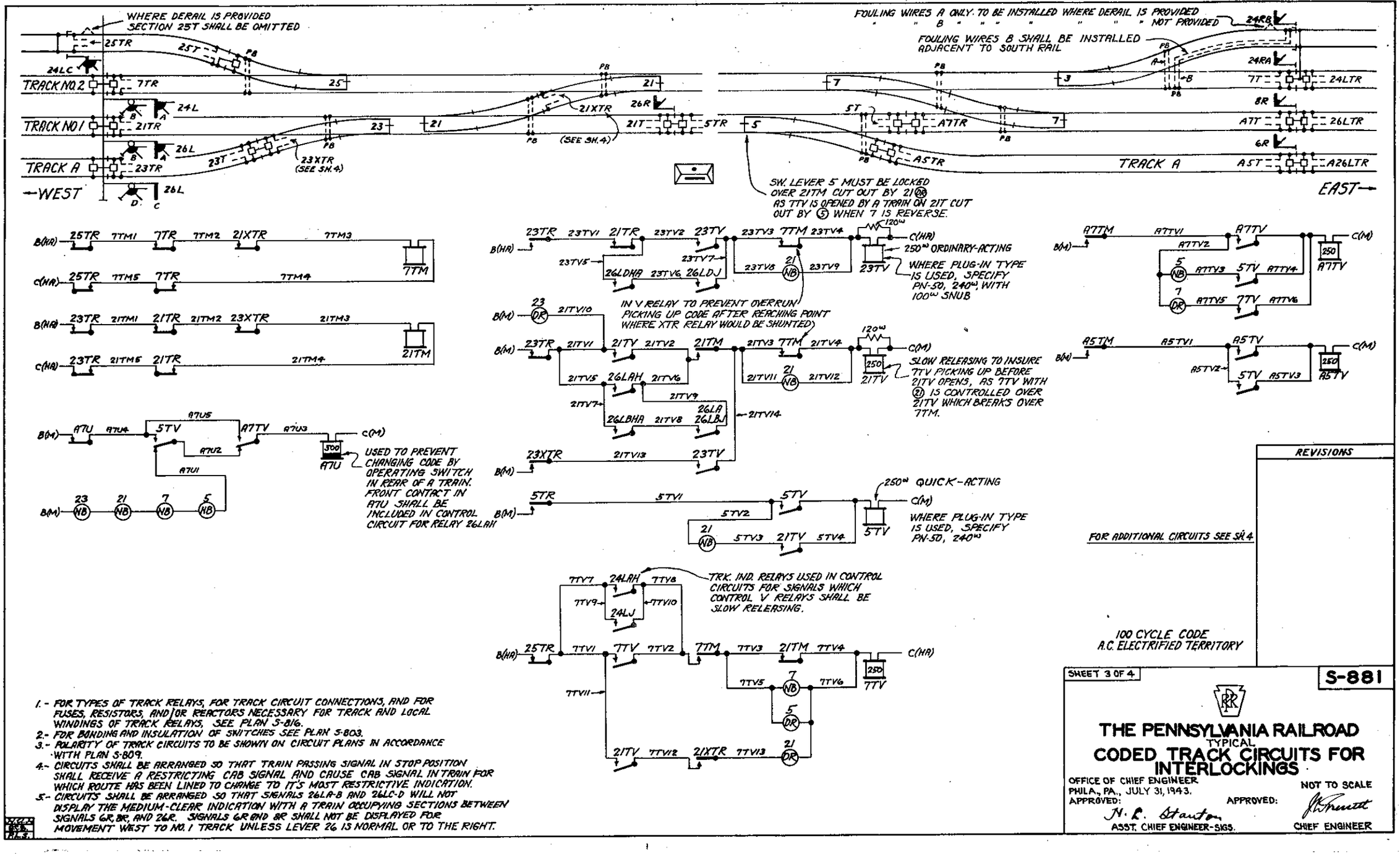

1.- FOR TYPES OF TRACK RELAYS, FOR TRACK CIRCUIT CONNECTIONS, AND FOR FUSES, RESISTORS, AND/OR REACTORS NECESSARY FOR TRACK AND LOCAL WINDINGS OF TRACK RELAYS, SEE PLAN S-816.

2.- FOR BONDING AND INSULATION OF SWITCHES SEE PLAN S-803.

3.- POLARITY OF TRACK CIRCUITS TO BE SHOWN ON CIRCUIT PLANS IN ACCORDANCE WITH PLAN S-809.

4.- CIRCUITS SHALL BE ARRANGED SO THAT TRAIN PASSING SIGNAL IN STOP POSITION SHALL RECEIVE A RESTRICTING CAB SIGNAL AND CAUSE CAB SIGNAL IN TRAIN FOR WHICH ROUTE HAS BEEN LINED TO CHANGE TO IT'S MOST RESTRICTIVE INDICATION.

5.- CIRCUITS SHALL BE ARRANGED SO THAT SIGNALS 26LA-B AND 26LC-D WILL NOT DISPLAY THE MEDIUM-CLEAR INDICATION WITH A TRAIN OCCUPYING SECTIONS BETWEEN SIGNALS 6R, 8R, AND 26R. SIGNALS 6R AND 8R SHALL NOT BE DISPLAYED FOR MOVEMENT WEST TO NO. 1 TRACK UNLESS LEVER 26 IS NORMAL OR TO THE RIGHT.

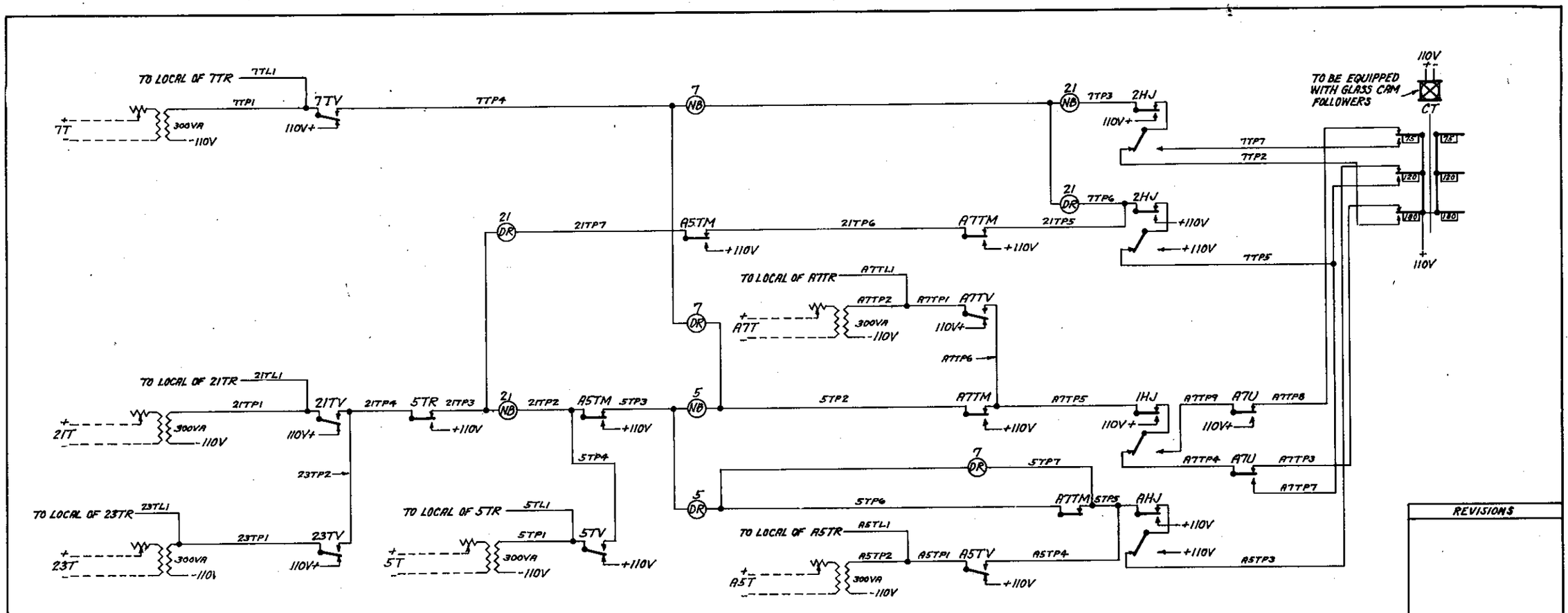

REVISIONS

100 CYCLE CODE
A.C. ELECTRIFIED TERRITORY

SHEET 4 OF 4

S-881

THE PENNSYLVANIA RAILROAD

TYPICAL

CODED TRACK CIRCUITS FOR INTERLOCKINGS

OFFICE OF CHIEF ENGINEER
PHILA., PA., JULY 31, 1943.

NOT TO SCALE

APPROVED: N. R. Stanton
ASST. CHIEF ENGINEER-SIGS.

APPROVED: J. Pennoyer
CHIEF ENGINEER

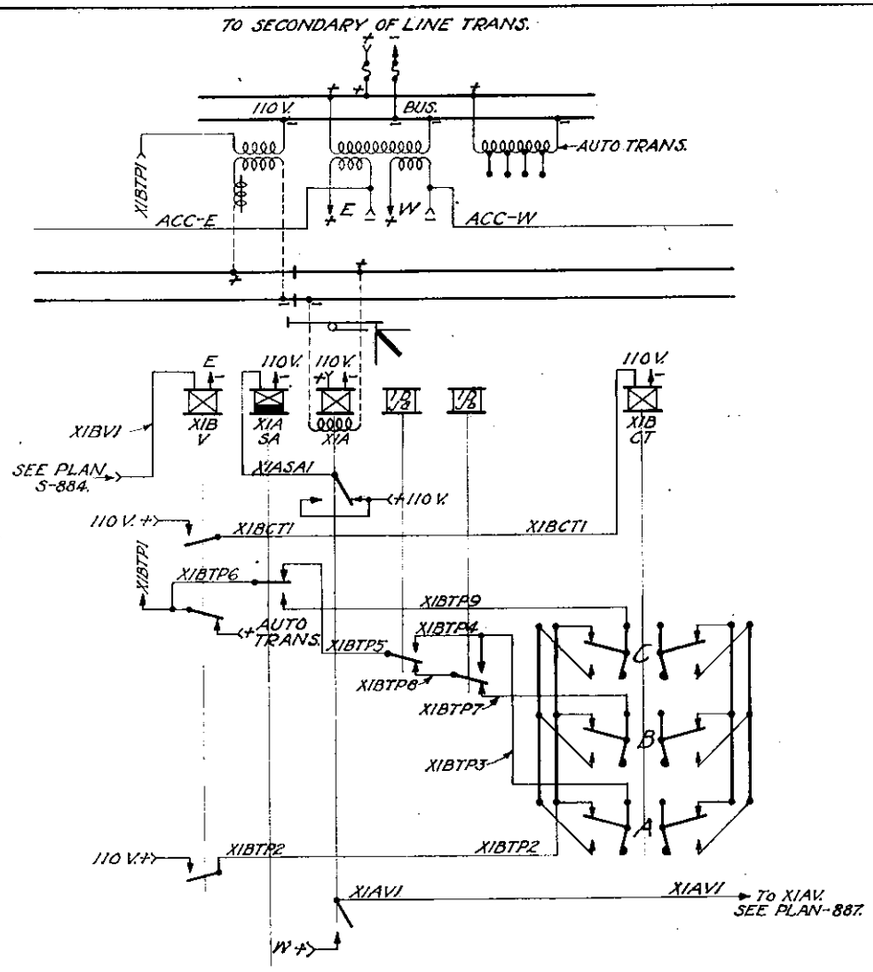

THREE BLOCK TERRITORY

FOR LIGHTING CIRCUITS SEE PLAN S-856, FIG. 2.

FIGURE 1.

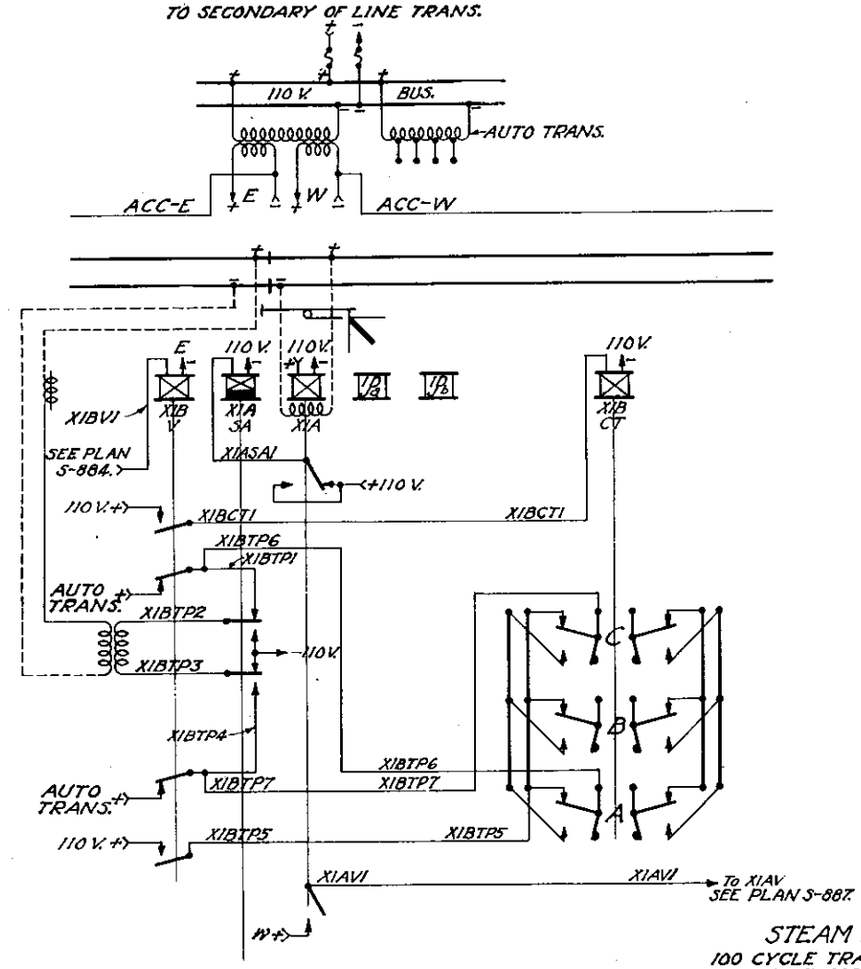

TWO BLOCK TERRITORY

FOR LIGHTING CIRCUITS SEE PLAN S-856, FIG. 5.

FIGURE 2.

STEAM ROAD

100 CYCLE TRACK CIRCUIT.
100 CYCLE CODE.

REVISIONS.

3-26-27. CONTACT ON "X1ASA" REMOVED FROM "X1BV" CONTROL, FIGURES 1 AND 2.

APPROVED

SHEET 1 OF 9

S-883

THE PENNSYLVANIA RAILROAD
STANDARD
CODED TRACK CIRCUITS APPROACHING
DISTANT INTERLOCKING SIGNAL

OFFICE OF CHIEF SIGNAL ENGINEER,
PHILA., PA., JAN. 26, 1927

NOT TO SCALE

Approved
Chief Signal Engineer

Approved
Chief Engineer

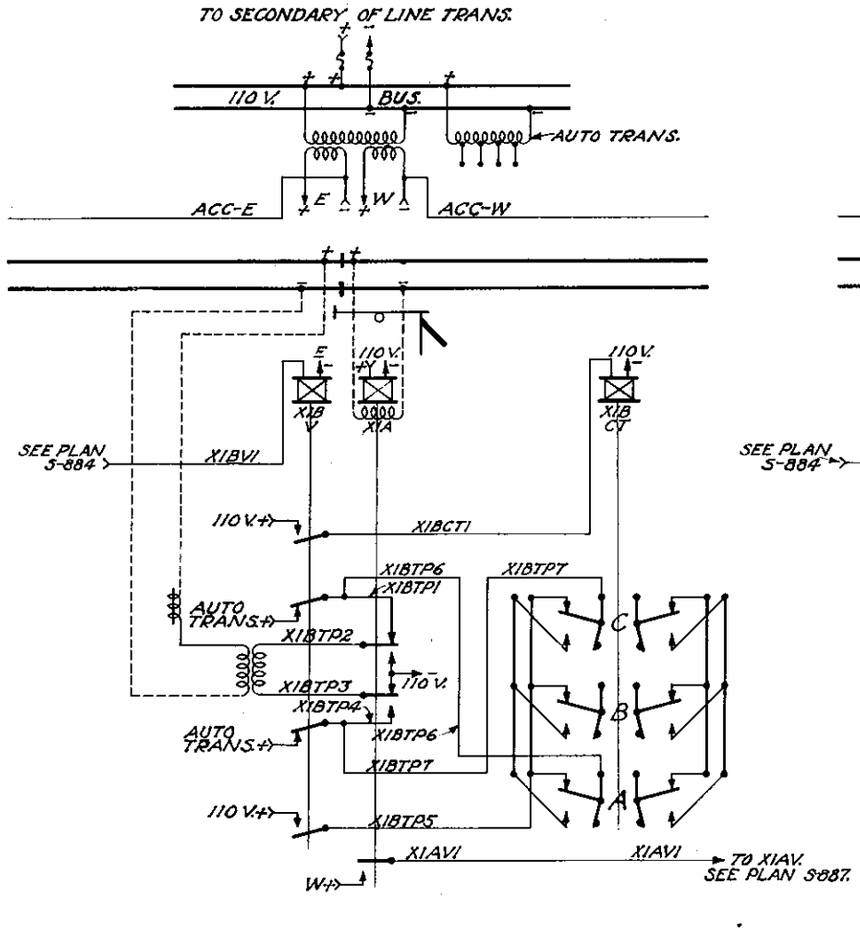

FOR LIGHTING CIRCUITS SEE PLAN S-856, FIG. 14.

FIGURE 3.

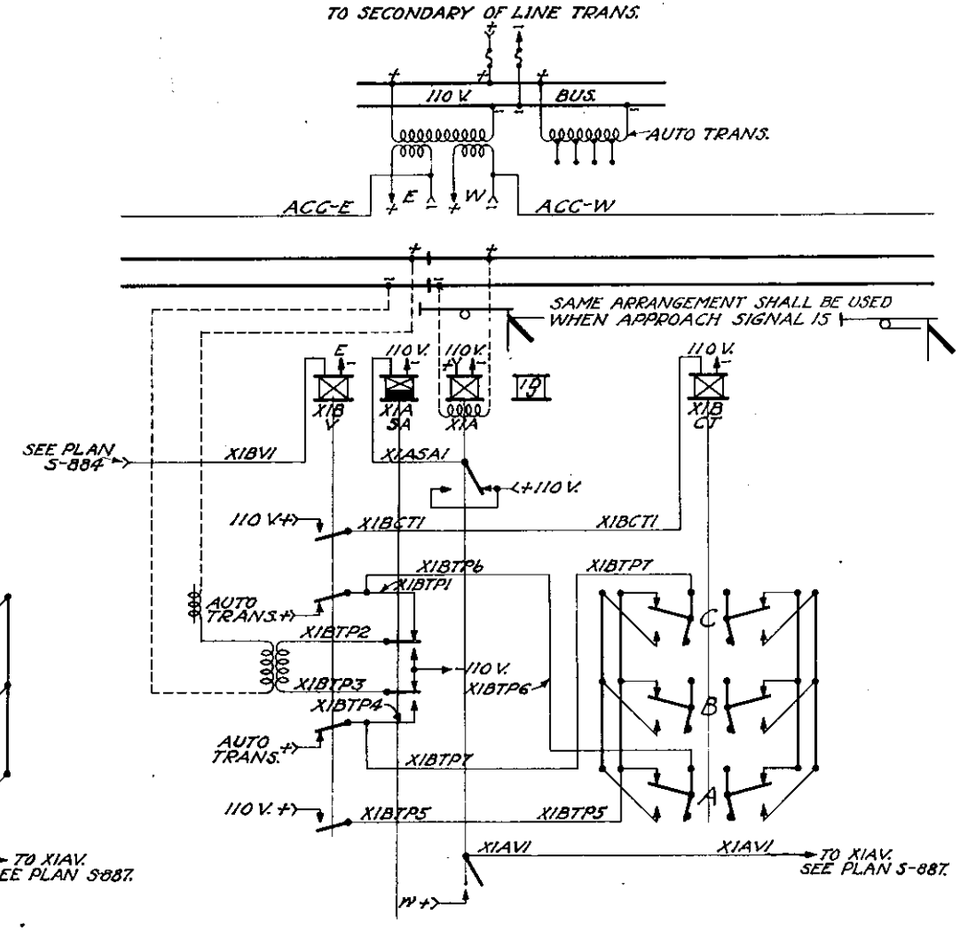

FOR LIGHTING CIRCUITS SEE PLAN S-856, FIG. 8, FOR AND FIG. 11, FOR.

STEAM ROAD.
100 CYCLE TRACK CIRCUIT.
100 CYCLE CODE.

FIGURE 4.

REVISIONS.

3-26-27. CONTACT ON "X1ASA" REMOVED FROM "X1AV" CONTROL, FIG. 4.

APPROVED: A.H. Rudd

SHEET 2 OF 9

S-883

THE PENNSYLVANIA RAILROAD
STANDARD
CODED TRACK CIRCUITS APPROACHING DISTANT INTERLOCKING SIGNAL

OFFICE OF CHIEF SIGNAL ENGINEER, PHILA., PA., JAN. 26, 1927

NOT TO SCALE

Approved A.H. Rudd Chief Signal Engineer

Approved Chief Engineer

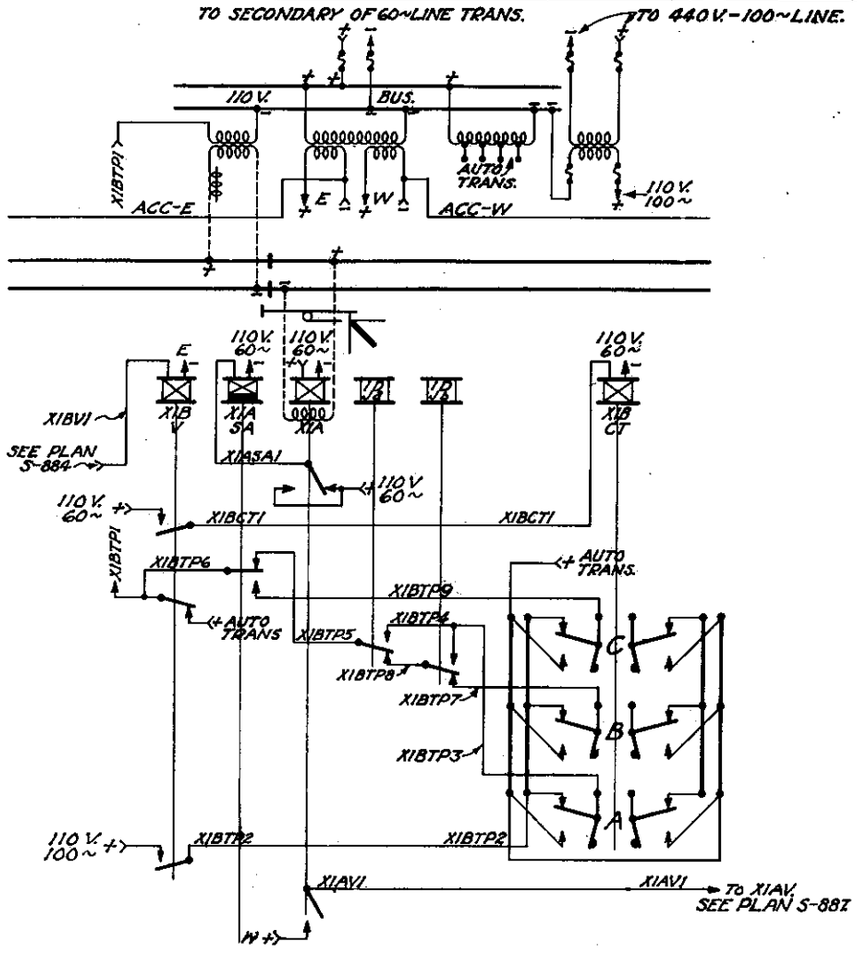

THREE BLOCK TERRITORY

FOR LIGHTING CIRCUITS SEE PLAN S-856, FIG.2.

FIGURE 5.

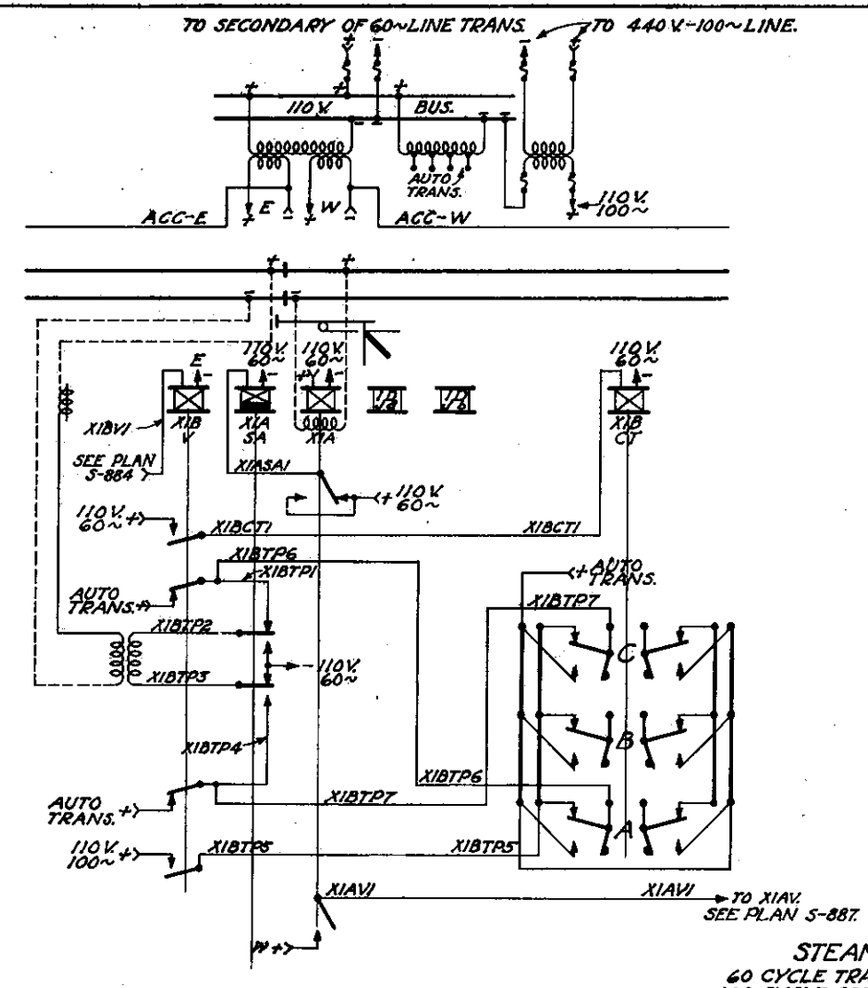

TWO BLOCK TERRITORY

FOR LIGHTING CIRCUITS SEE PLAN S-856, FIG.5.

FIGURE 6.

STEAM ROAD
60 CYCLE TRACK CIRCUIT.
100 CYCLE CODE.

REVISIONS.

3-26-27 CONTACT ON "XIASA" REMOVED FROM "XIAV" CONTROL, FIGURES 5 & 6.

APPROVED

SHEET 3 OF 9

S-883

THE PENNSYLVANIA RAILROAD
STANDARD
CODED TRACK CIRCUITS APPROACHING
DISTANT INTERLOCKING SIGNAL

OFFICE OF CHIEF SIGNAL ENGINEER,
PHILA., PA., JAN. 29, 1927

NOT TO SCALE

Approved
Chief Signal Engineer

Approved
Chief Engineer

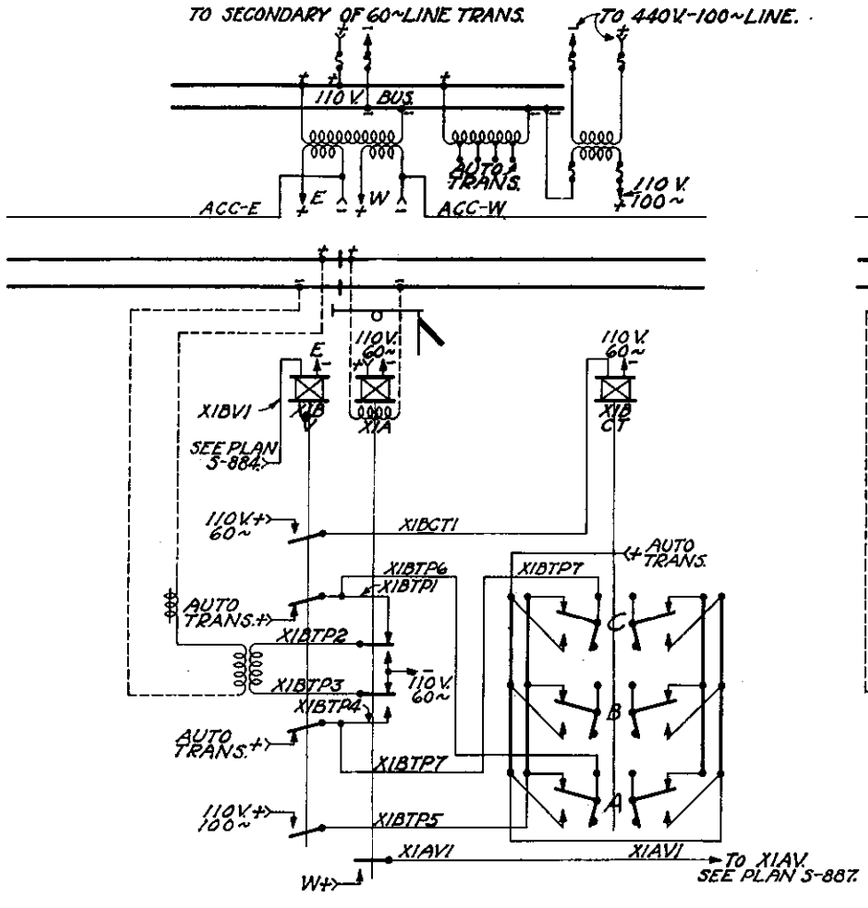

FOR LIGHTING CIRCUITS SEE PLAN S-856, FIG. 14

FIGURE 7.

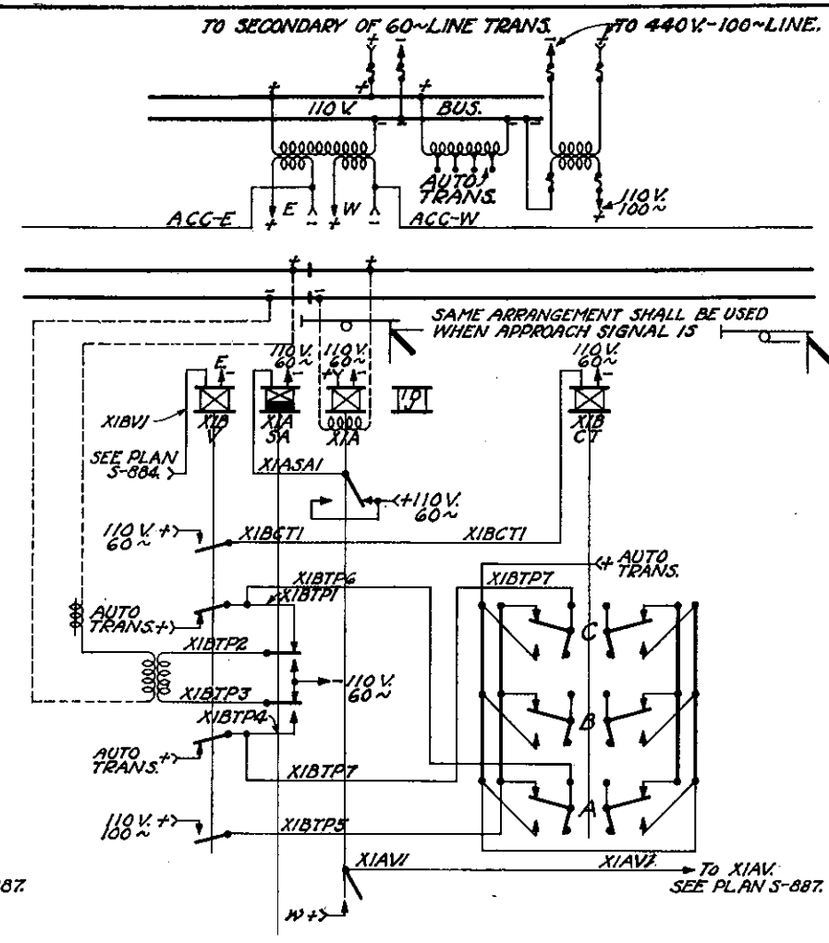

FOR LIGHTING CIRCUITS SEE PLAN S-856, FIG. 8, FOR AND FIG. 11, FOR

FIGURE 8.

STEAM ROAD
60 CYCLE TRACK CIRCUIT.
100 CYCLE CODE.

REVISIONS.

3-26-27. CONTACT ON "XIA5A" REMOVED FROM "XIAV" CONTROL, FIG. 8.

APPROVED

SHEET 4 OF 9

S-883

THE PENNSYLVANIA RAILROAD
STANDARD
CODED TRACK CIRCUITS APPROACHING DISTANT INTERLOCKING SIGNAL

OFFICE OF CHIEF SIGNAL ENGINEER.
PHILA., PA., JAN. 26, 1927

NOT TO SCALE

Approved
Chief Signal Engineer

Approved
Chief Engineer

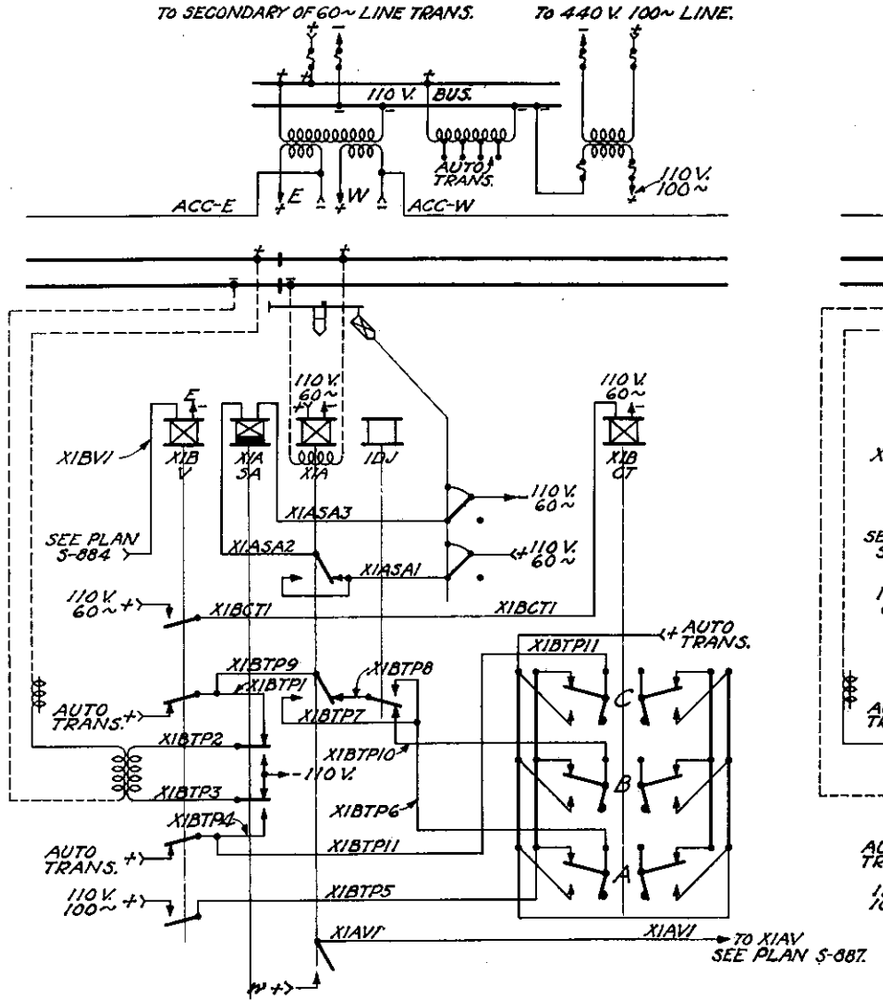

THREE BLOCK TERRITORY

FOR SIGNAL OPERATING CIRCUITS SEE PLAN S-847, FIG. 3.

FIGURE 9

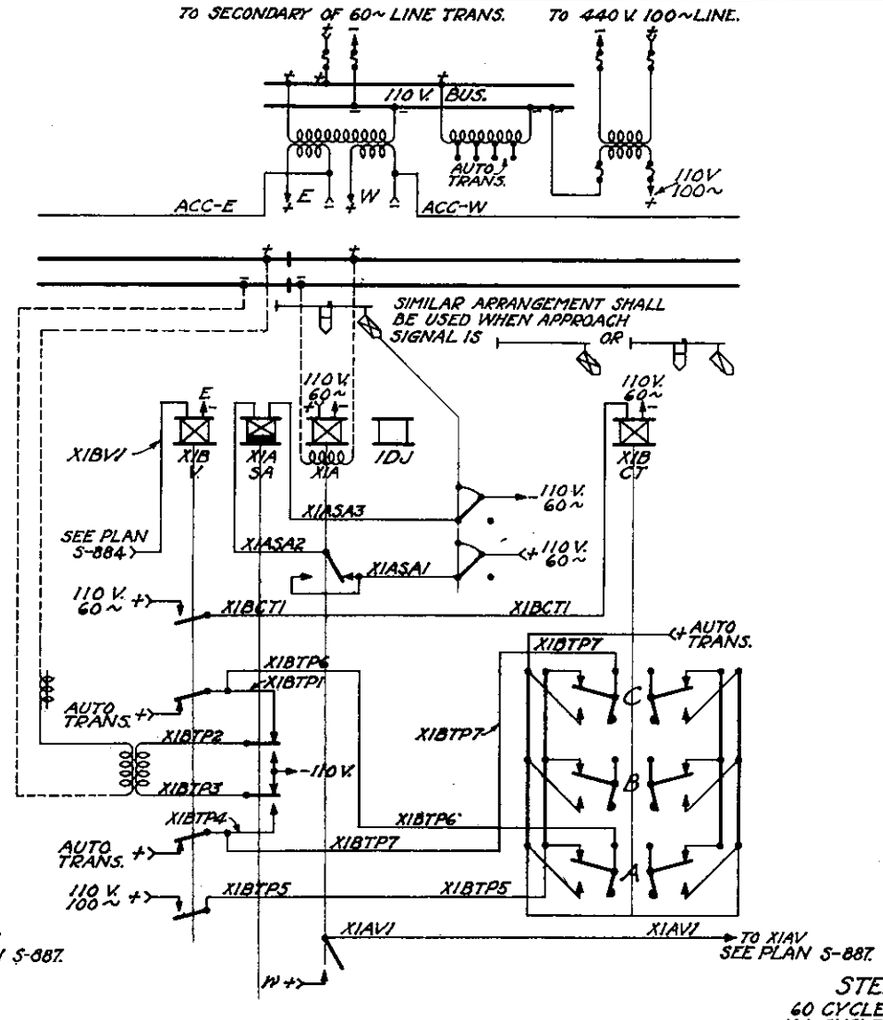

TWO BLOCK TERRITORY

FOR SIGNAL OPERATING CIRCUITS SEE PLAN S-847, FIG. 3 FOR

AND PLAN S-847, FIG. 2 FOR

AND PLAN S-847, FIG. 4 FOR

FIGURE 10

STEAM ROAD
60 CYCLE TRACK CIRCUIT.
100 CYCLE CODE.

REVISIONS.

5-26-27. CONTACT ON "X1ASA" REMOVED FROM "X1AV" CONTROL, FIGURES 9 & 10.

APPROVED: A. H. Rudd, Chief Engineer

SHEET 5 OF 9

S-883

THE PENNSYLVANIA RAILROAD
STANDARD
CODED TRACK CIRCUITS APPROACHING DISTANT INTERLOCKING SIGNAL

OFFICE OF CHIEF SIGNAL ENGINEER, PHILA., PA., JAN. 26, 1927

NOT TO SCALE

Approved A. H. Rudd, Chief Signal Engineer

Approved, Chief Engineer

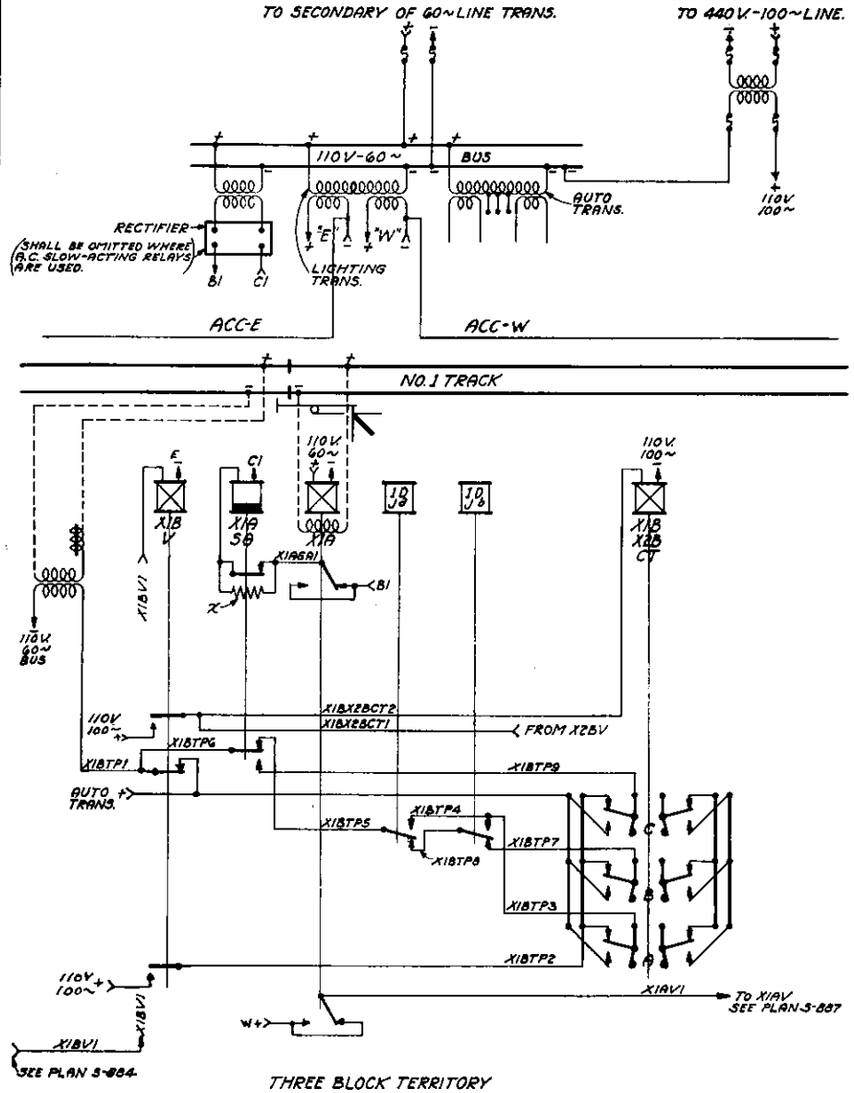

THREE BLOCK TERRITORY
POLARIZED TRACK CONTROL AND LINE CONTROL FOR BOTH ARMS.
FOR LIGHTING CIRCUITS SEE PLAN S-856, FIG. 2.
FIGURE 11

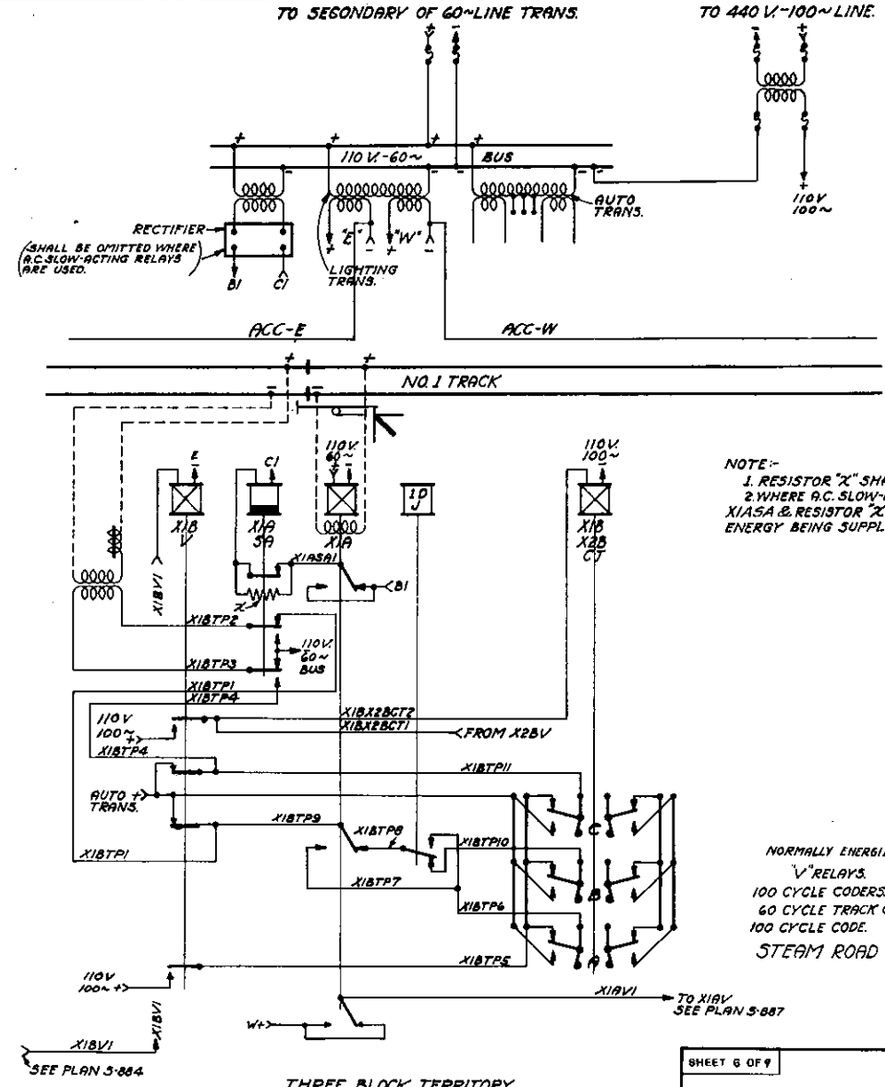

THREE BLOCK TERRITORY
POLARIZED TRACK CONTROL FOR TOP ARM-LINE CONTROL FOR BOT. ARM.
FOR LIGHTING CIRCUITS SEE CIRCUIT PLAN FOR INTERLOCKING.
FIGURE 12.

NOTE:-
1. RESISTOR "X" SHALL BE IN ACCORDANCE WITH PLAN S-812.
2. WHERE A.C. SLOW-ACTING RELAYS ARE USED OMIT CONTACT X1ASA & RESISTOR "X" IN CONTROL CIRCUIT FOR SA RELAY, ENERGY BEING SUPPLIED FROM THE 110 V.-60~ BUS.

NORMALLY ENERGIZED
"V" RELAYS.
100 CYCLE CODERS.
60 CYCLE TRACK CIRCUIT.
100 CYCLE CODE.
STEAM ROAD

REVISIONS.

7-3-29. "V" RELAYS FORMERLY D.C. AND NORMALLY DEENERGIZED.

APPROVED: A H Rudd

A=PROCEED INDICATION. (180 CODE)
B=APPROACH RESTRICTING INDICATION. (120 CODE)
C=APPROACH INDICATION. (80 CODE)

SHEET 6 OF 9

S-883

THE PENNSYLVANIA RAILROAD
STANDARD
CODED TRACK CIRCUITS APPROACHING DISTANT INTERLOCKING SIGNAL

OFFICE OF CHIEF SIGNAL ENGINEER,
PHILA., PA., AUG. 16, 1928.

NOT TO SCALE

Approved A H Rudd Chief Signal Engineer

Approved Chief Engineer

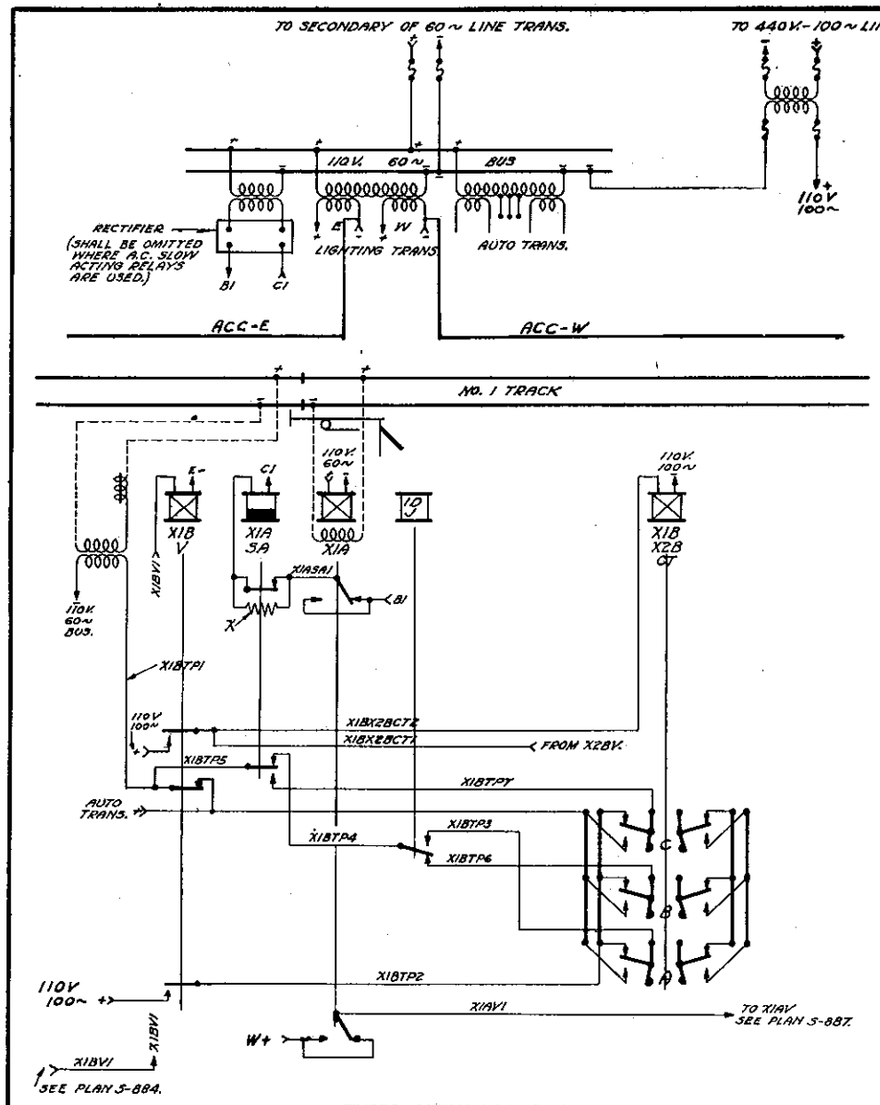

THREE BLOCK TERRITORY

POLARIZED TRACK CONTROL AND LINE CONTROL BOTTOM ARM.
FOR LIGHTING CIRCUITS SEE PLAN S-856, FIG. 11.

FIGURE 13.

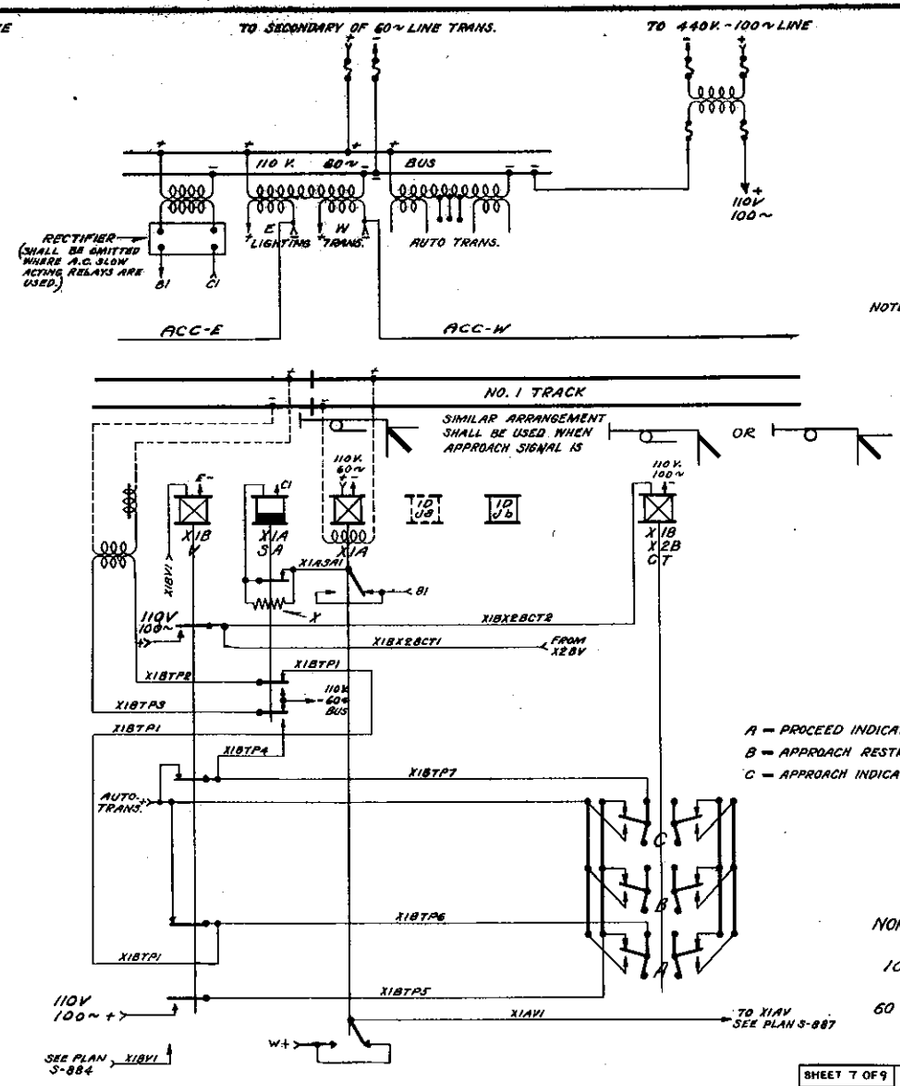

NOTE:-
1. RESISTOR "X" SHALL BE IN ACCORDANCE WITH PLAN S-812.
2. WHERE A.C. SLOW-ACTING RELAYS ARE USED, OMIT CONTACT X1ASA AND RESISTOR "X" IN CONTROL CIRCUIT FOR SA RELAY, ENERGY BEING SUPPLIED FROM THE 110 V.-60~ BUS.

A — PROCEED INDICATION (180 CODE)
B — APPROACH RESTRICTING INDICATION (120 CODE)
C — APPROACH INDICATION (80 CODE)

NORMALLY ENERGIZED "V" RELAYS.
100 CYCLE CODERS.

60 CYCLE TRACK CIRCUIT
100 CYCLE CODE
STEAM ROAD

TWO BLOCK TERRITORY

WHERE POLARIZED TRACK CONTROL AND LINE CONTROL FOR BOTH ARMS IS PROVIDED, LIGHTING CIRCUITS SHALL BE IN ACCORDANCE WITH PLAN S-856, FIG. 5 AND FIG. 11 FOR AND FIGURE 8 FOR
WHERE POLARIZED TRACK CONTROL AND LINE CONTROL FOR SECOND ARM ONLY IS PROVIDED, LIGHTING CIRCUITS SHALL BE SHOWN ON CIRCUIT PLAN FOR INTERLOCKING.

FIGURE 14

REVISIONS

7-3-29. "V" RELAYS FORMERLY D.C. AND NORMALLY DEENERGIZED.

APPROVED A.H. Rudd

SHEET 7 OF 9

S-883

THE PENNSYLVANIA RAILROAD
STANDARD
CODED TRACK CIRCUITS APPROACHING DISTANT INTERLOCKING SIGNAL

OFFICE OF CHIEF SIGNAL ENGINEER,
PHILA., PA., AUG. 16, 1926.

NOT TO SCALE

Approved A.H. Rudd
Chief Signal Engineer

Approved
Chief Engineer

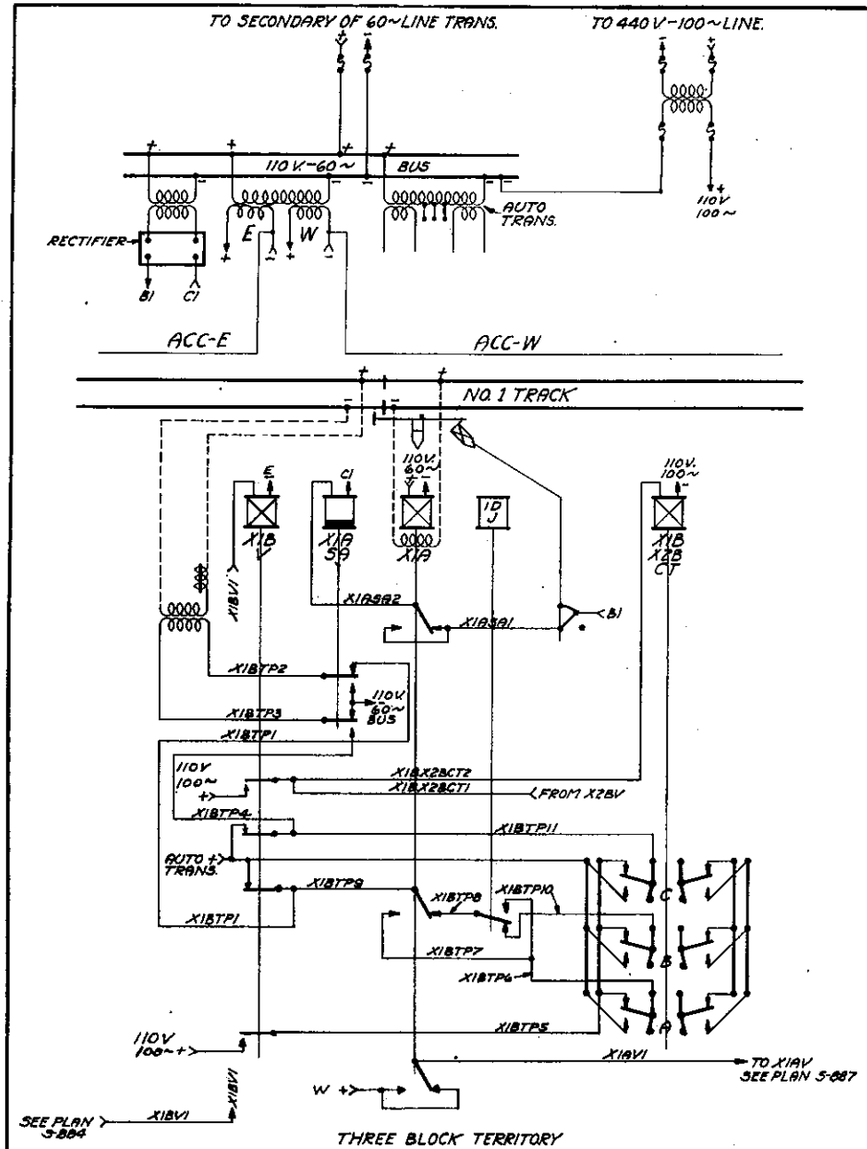

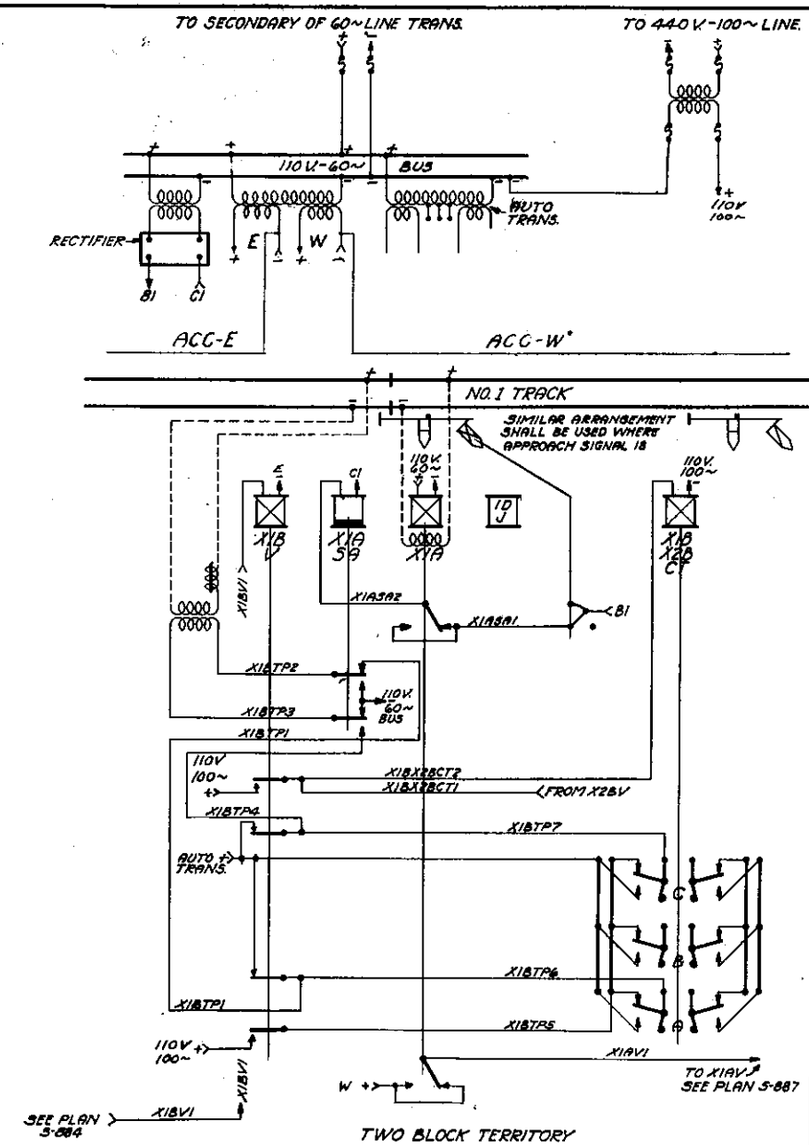

A = PROCEED INDICATION. (180 CODE)
B = APPROACH RESTRICTING INDICATION. (120 CODE)
C = APPROACH INDICATION. (80 CODE)

NORMALLY ENERGIZED
"V" RELAYS.
100 CYCLE CODERS.
60 CYCLE TRACK CIRCUIT.
100 CYCLE CODE.
STEAM ROAD.

REVISIONS.

7-3-29. "V" RELAYS FORMERLY D.C. AND NORMALLY DEENERGIZED

APPROVED: A.H. Rudd

SHEET 8 OF 9

S-883

THE PENNSYLVANIA RAILROAD
STANDARD
CODED TRACK CIRCUITS APPROACHING DISTANT INTERLOCKING SIGNAL

OFFICE OF CHIEF SIGNAL ENGINEER,
PHILA., PA., AUG. 15, 1928.

NOT TO SCALE

Approved A.H. Rudd
Chief Signal Engineer

Approved
Chief Engineer

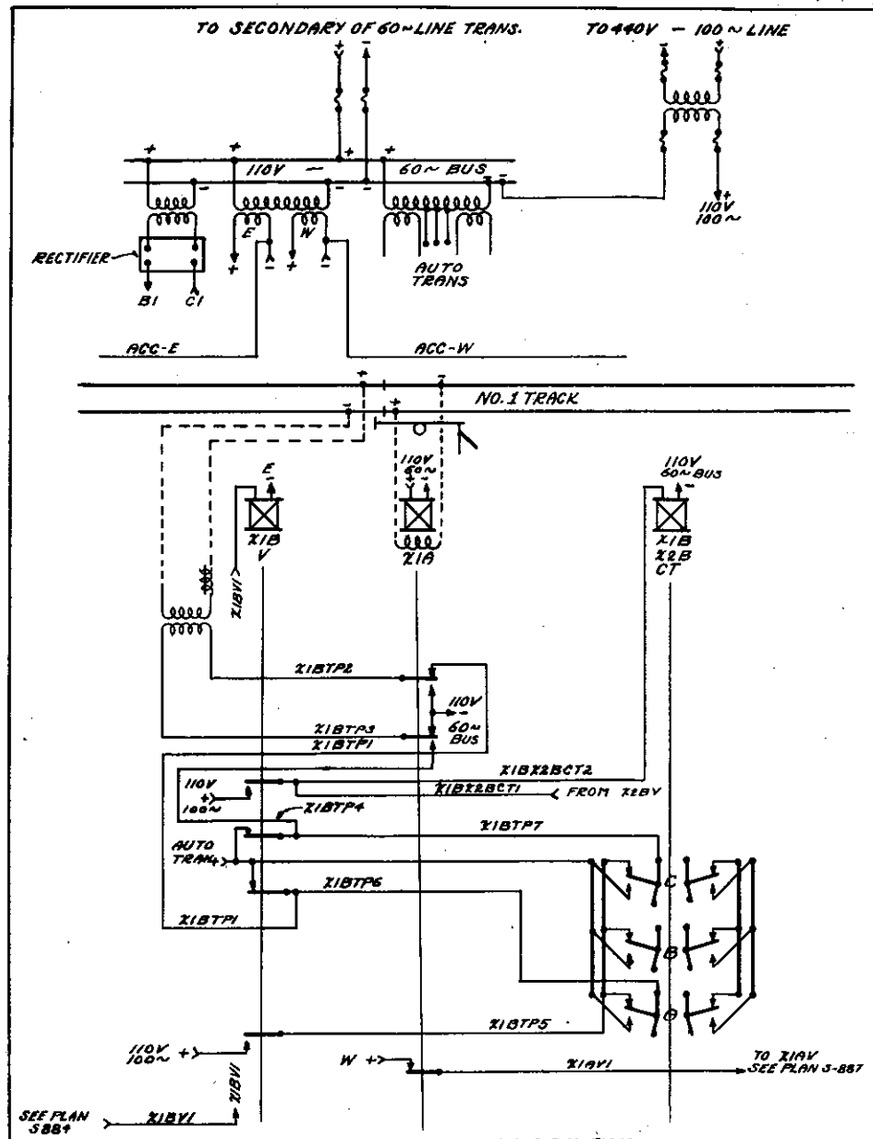

FOR SIGNAL LIGHTING CIRCUITS SEE PLAN S-856, FIG.14.

FIGURE 17.

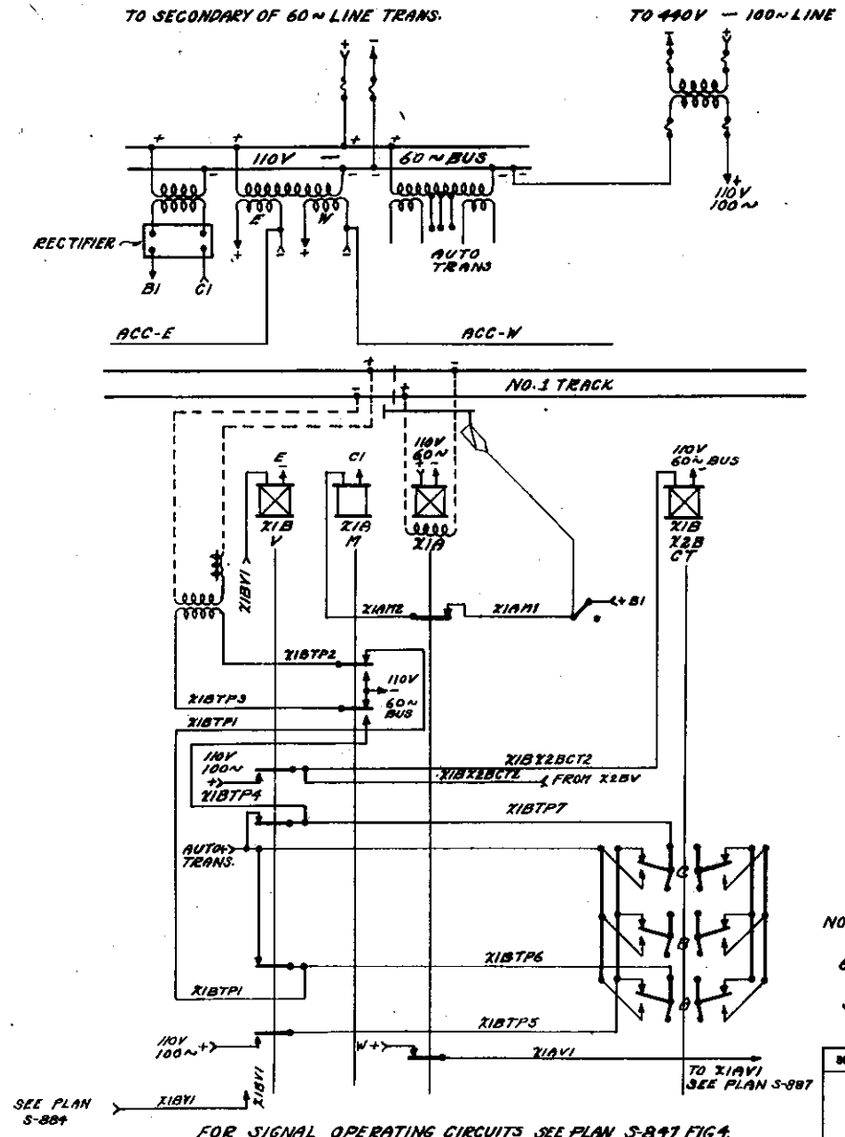

FOR SIGNAL OPERATING CIRCUITS SEE PLAN S-847, FIG.4.

FIGURE 18.

A = PROCEED INDICATION (180 CODE)
B = APPROACH RESTRICTING INDICATION (120 CODE)
C = APPROACH INDICATION (80 CODE)

NORMALLY ENERGIZED "V" RELAYS
100 CYCLE CODERS
60 CYCLE TRACK CIRCUIT
100 CYCLE CODE
STEAM ROAD

REVISIONS.

SHEET 9 OF 9

S-883

THE PENNSYLVANIA RAILROAD
STANDARD
CODED TRACK CIRCUITS APPROACHING DISTANT INTERLOCKING SIGNAL

OFFICE OF CHIEF SIGNAL ENGINEER,
PHILA., PA., JULY 3, 1929.

NOT TO SCALE

Approved
Chief Signal Engineer

Approved
Chief Engineer

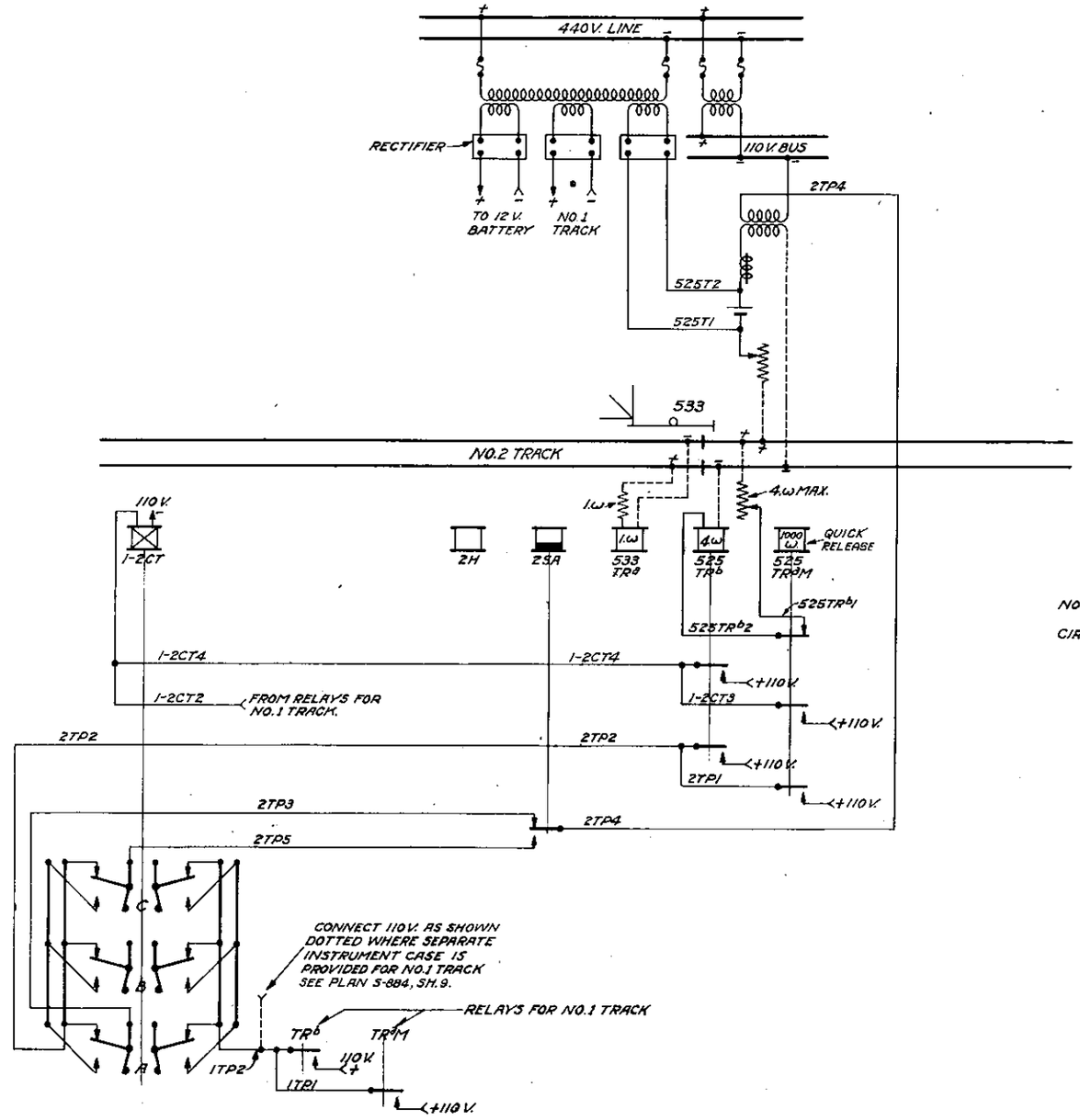

NOTE:-
FOR SIGNAL LIGHTING AND CONTROL CIRCUITS SEE PLAN S-857, SHEET 5.

100 CYCLE CODE.
D.C. TRACK CIRCUITS WITH MULTIPLE RELAY ARRANGEMENT FOR FOREIGN CURRENT PROTECTION.

REVISIONS.

7-24-28. 110V. SECONDARY FORMERLY SHOWN ON 4 SECONDARY TRANSFORMER.
APPROVED:- A.H. Rudd

SHEET 7 OF 17

S-884

THE PENNSYLVANIA RAILROAD
STANDARD
CODED TRACK CIRCUITS IN AUTOMATIC TERRITORY

OFFICE OF CHIEF SIGNAL ENGINEER.
PHILA., PA., OCT. 8, 1927.

NOT TO SCALE

Approved A.H. Rudd
Chief Signal Engineer

Approved
Chief Engineer

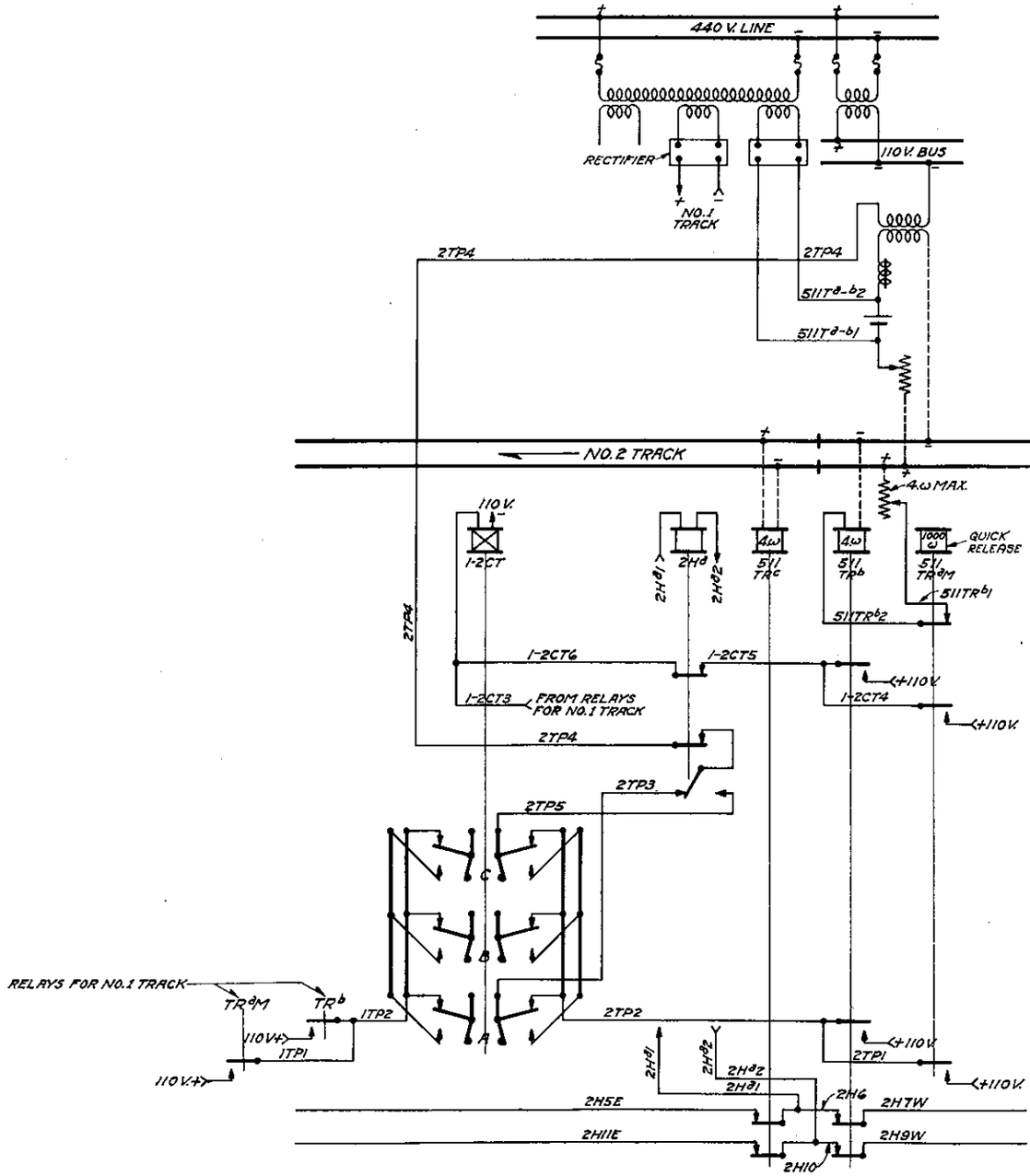

NOTE:-
FOR CONTROL CIRCUITS SEE PLAN S-857, SHEET 6.

100 CYCLE CODE
D.C. TRACK CIRCUITS WITH
MULTIPLE RELAY ARRANGEMENT
FOR FOREIGN CURRENT PROTECTION.

CUT-SECTION.

SHALL BE USED WHERE DISTANCE OR CONDITIONS BETWEEN SIGNALS IS SUCH THAT A SINGLE TRACK CIRCUIT CANNOT BE MAINTAINED.

REVISIONS.

7-24-28. 110 V. SECONDARY FORMERLY SHOWN ON 4 SECONDARY TRANSFORMER
APPROVED:- C.H. Rudd

SHEET 8 OF 17

S-884

THE PENNSYLVANIA RAILROAD
STANDARD
CODED TRACK CIRCUITS IN AUTOMATIC TERRITORY

OFFICE OF CHIEF SIGNAL ENGINEER,
PHILA., PA., OCT. 3, 1927

NOT TO SCALE

Approved C.H. Rudd
Chief Signal Engineer

Approved
Chief Engineer

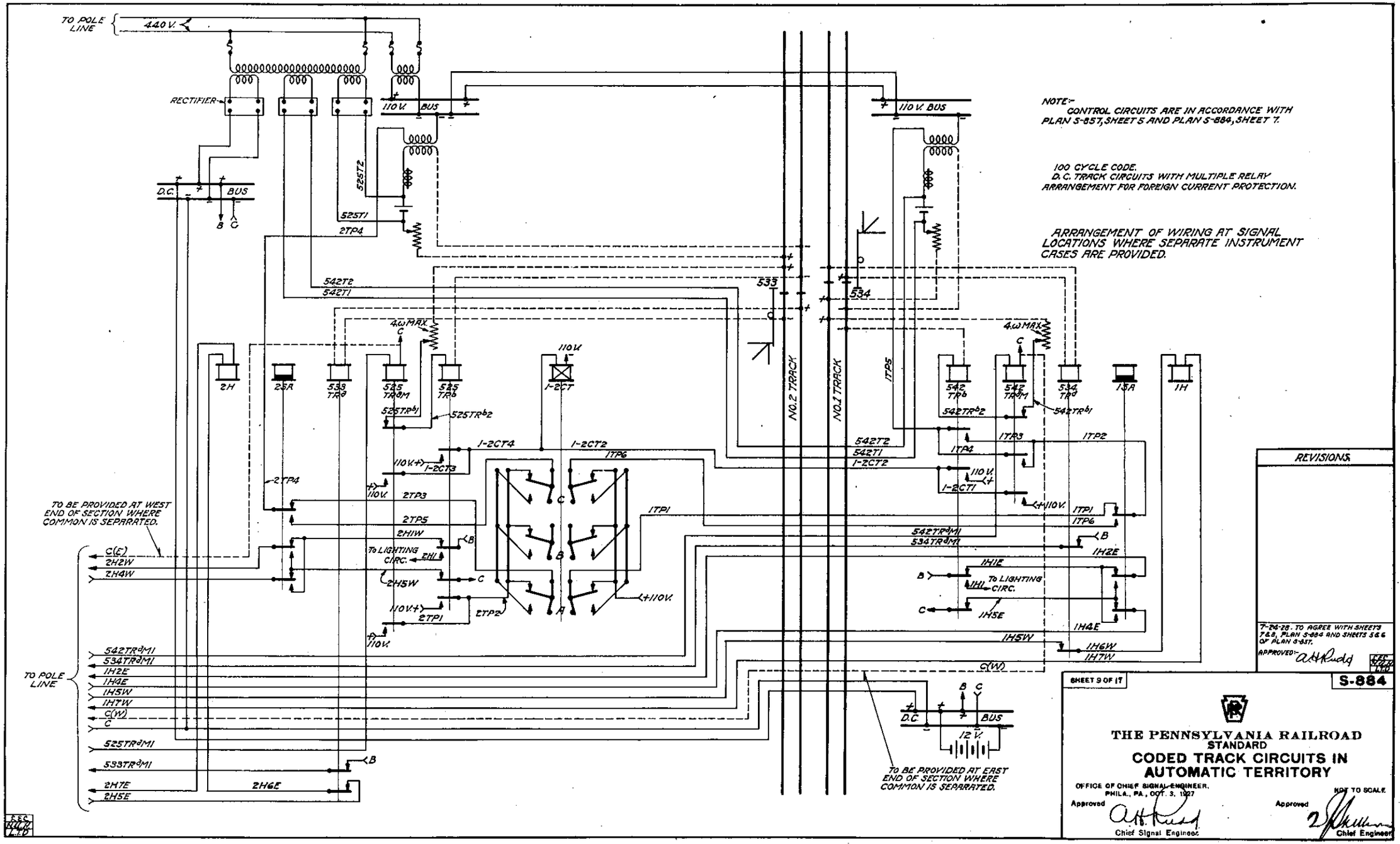

NOTE:-
CONTROL CIRCUITS ARE IN ACCORDANCE WITH PLAN S-857, SHEET 5 AND PLAN S-884, SHEET 7.

100 CYCLE CODE.
D.C. TRACK CIRCUITS WITH MULTIPLE RELAY ARRANGEMENT FOR FOREIGN CURRENT PROTECTION.

ARRANGEMENT OF WIRING AT SIGNAL LOCATIONS WHERE SEPARATE INSTRUMENT CASES ARE PROVIDED.

REVISIONS.

7-24-28. TO AGREE WITH SHEETS 7 & 8, PLAN S-884 AND SHEETS 5 & 6 OF PLAN S-857.

APPROVED:- A.H. Rudd

SHEET 9 OF 17

S-884

THE PENNSYLVANIA RAILROAD
STANDARD
CODED TRACK CIRCUITS IN AUTOMATIC TERRITORY

OFFICE OF CHIEF SIGNAL ENGINEER.
PHILA., PA., OCT. 3, 1927

NOT TO SCALE

Approved A.H. Rudd
Chief Signal Engineer

Approved J. Pilliner
Chief Engineer

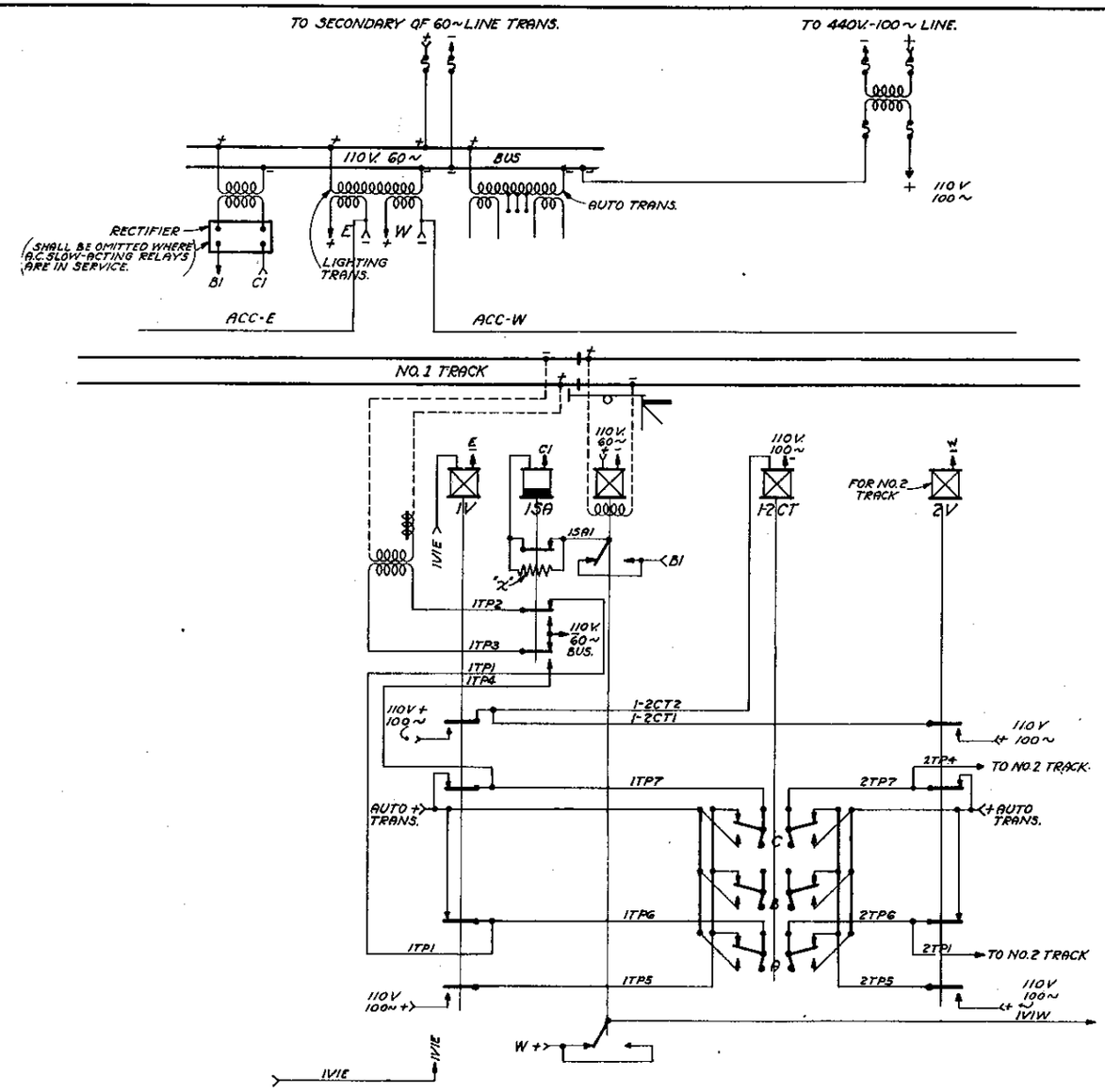

NOTE:-
1. FOR LIGHTING CIRCUITS SEE PLAN S-857, FIG. 4.
2. RESISTOR "x" SHALL BE IN ACCORDANCE WITH PLAN S-812.
3. WHERE A.C. SLOW-ACTING RELAYS ARE USED OMIT CONTACT (1SA) AND RESISTOR "x" IN CONTROL CIRCUIT FOR SA RELAY, ENERGY BEING SUPPLIED FROM THE 110V-60~ BUS.

NORMALLY ENERGIZED "V" RELAYS.
100 CYCLE CODERS.

60 CYCLE TRACK CIRCUIT.
100 CYCLE CODE.
TWO BLOCK TERRITORY.
STEAM ROAD.

A = PROCEED INDICATION. (180 CODE)
B = APPROACH RESTRICTING INDICATION. (120 CODE)
C = APPROACH INDICATION. (80 CODE)

REVISIONS.

5-23-29. "V" RELAYS FORMERLY D.C. AND NORMALLY DEENERGIZED.

APPROVED:- A.H. Rudd

EEC. H.R.K. S.H.G.

SHEET 10 OF 17

S-884

THE PENNSYLVANIA RAILROAD
STANDARD
CODED TRACK CIRCUITS IN AUTOMATIC TERRITORY

OFFICE OF CHIEF SIGNAL ENGINEER.
PHILA., PA., JULY 30, 1928.

NOT TO SCALE

Approved A.H. Rudd Chief Signal Engineer

Approved J. Pilliod Chief Engineer

EEC. H.R.K. S.H.G.

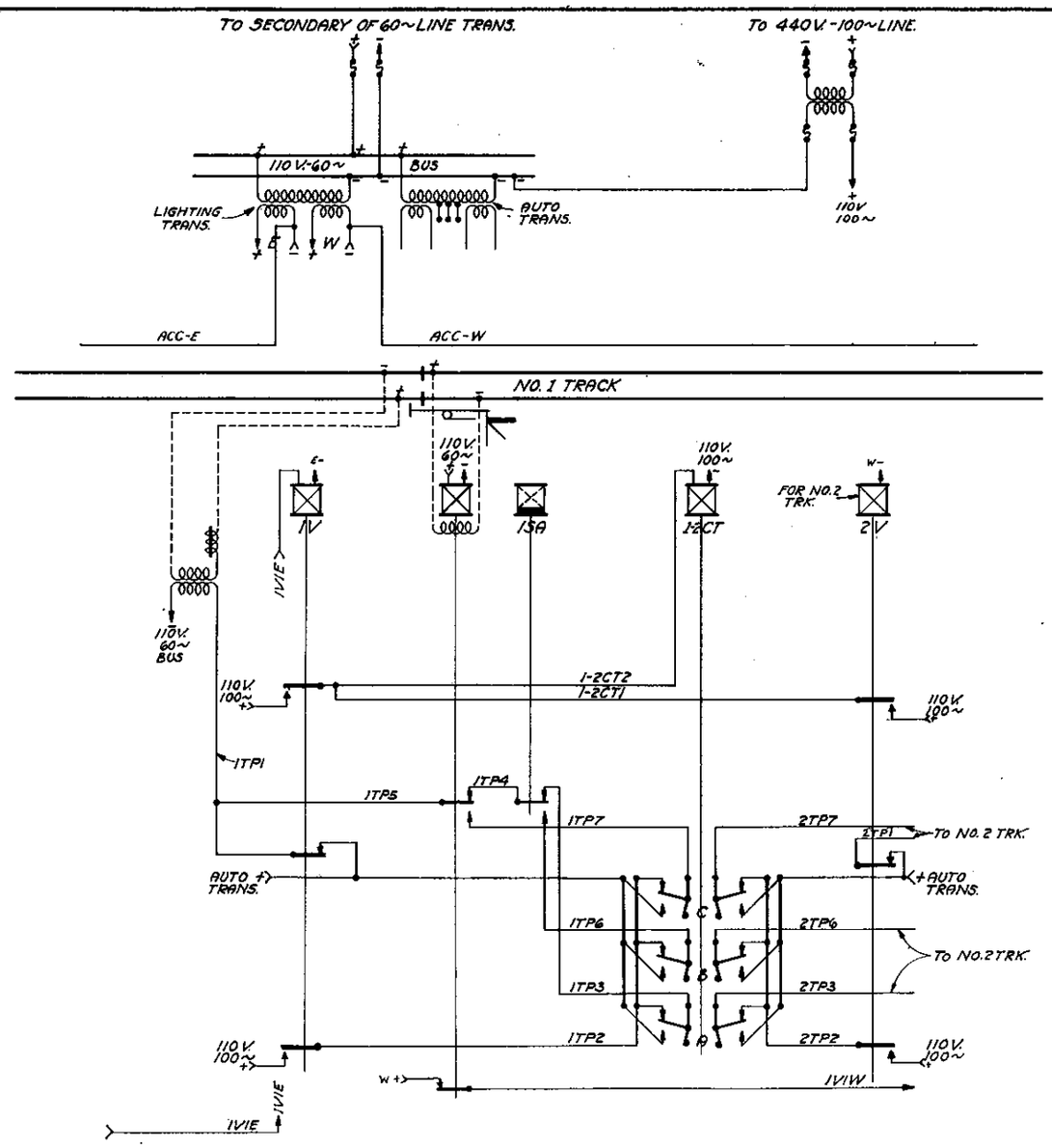

A = PROCEED INDICATION. (180 CODE)
B = APPROACH RESTRICTING INDICATION. (120 CODE)
C = APPROACH INDICATION. (80 CODE)

NOTE:-
1. FOR LIGHTING CIRCUITS SEE PLAN S-857, FIG. 2.

NORMALLY ENERGIZED "V" RELAYS.
100 CYCLE CODERS.

60 CYCLE TRACK CIRCUIT.
100 CYCLE CODE.
THREE BLOCK TERRITORY.
STEAM ROAD.
NEUTRAL TRACK & POLARIZED LINE CONTROL IN ACCORDANCE WITH PLAN S-857-FIG. 2.

REVISIONS.

5-28-29. "V" RELAYS FORMERLY D.C. AND NORMALLY DEENERGIZED.

APPROVED: [signature]

SHEET 11 OF 17

S-884

THE PENNSYLVANIA RAILROAD
STANDARD
CODED TRACK CIRCUITS IN AUTOMATIC TERRITORY

OFFICE OF CHIEF SIGNAL ENGINEER,
PHILA., PA., JULY 30, 1928.

NOT TO SCALE

Approved [signature]
Chief Signal Engineer

Approved [signature]
Chief Engineer

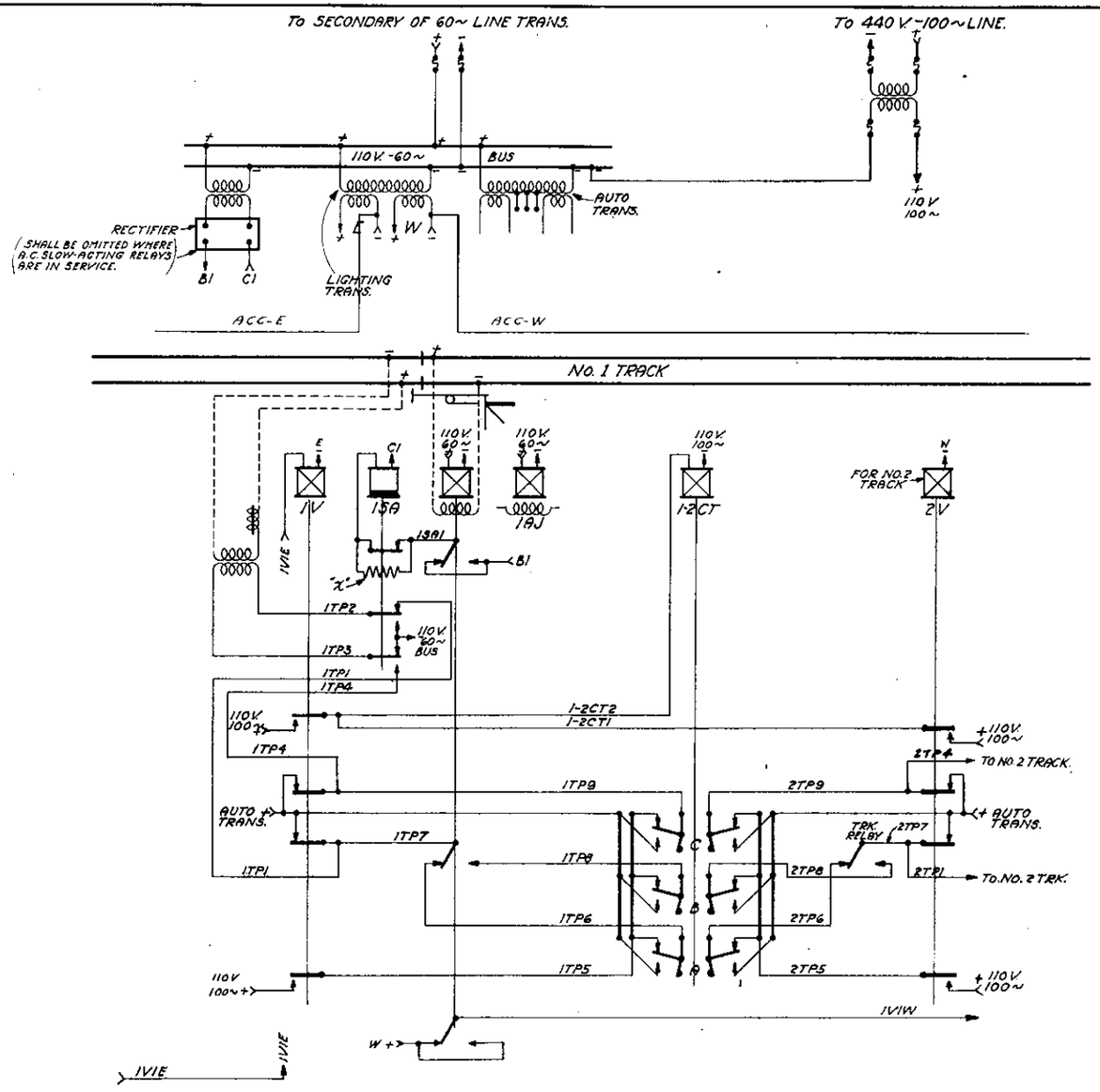

A = PROCEED INDICATION. (180 CODE)
B = APPROACH RESTRICTING INDICATION. (120 CODE)
C = APPROACH INDICATION. (80 CODE)

NOTE:-
1. FOR LIGHTING CIRCUITS SEE PLAN S-857, FIG. 5.
2. RESISTOR "X" SHALL BE IN ACCORDANCE WITH PLAN S-812.
3. WHERE A.C. SLOW-ACTING RELAYS ARE USED OMIT CONTACT (1SA) AND RESISTOR "X" IN CONTROL CIRCUIT FOR 1SA RELAY, ENERGY BEING SUPPLIED FROM THE 110V-60~ BUS.

"V" RELAYS NORMALLY ENERGIZED.
100 CYCLE CODERS.

60 CYCLE TRACK CIRCUIT.
100 CYCLE CODE.
THREE BLOCK TERRITORY.
POLARIZED TRACK-NEUTRAL LINE CONTROL.
STEAM ROAD.

REVISIONS.

5-28-29 "V" RELAYS FORMERLY D.C. AND NORMALLY DEENERGIZED.

APPROVED:- A. H. Rudd

S.N.G.

SHEET 12 OF 17

S-884

THE PENNSYLVANIA RAILROAD
STANDARD
CODED TRACK CIRCUITS IN AUTOMATIC TERRITORY

OFFICE OF CHIEF SIGNAL ENGINEER.
PHILA., PA., JULY 30, 1928

NOT TO SCALE

Approved A. H. Rudd
Chief Signal Engineer

Approved
Chief Engineer

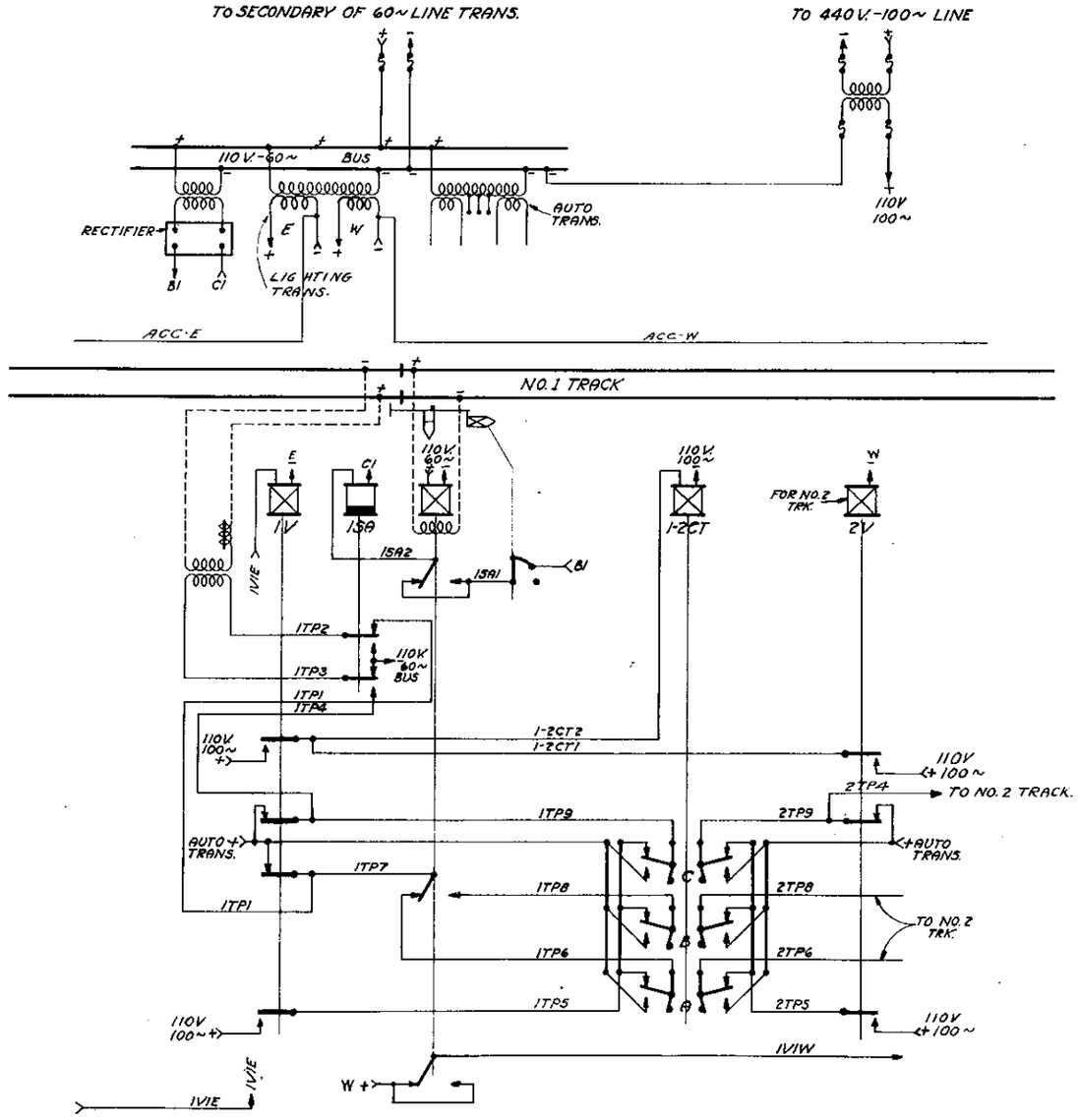

A=PROCEED INDICATION:(180 CODE)
B=APPROACH RESTRICTING INDICATION(120 CODE)
C=APPROACH INDICATION.(80 CODE)

NOTE:-
1. FOR SIGNAL OPERATING CIRCUITS SEE PLAN S-847, FIG. 1.

100 CYCLE CODERS.

60 CYCLE TRACK CIRCUIT.
100 CYCLE CODE.
THREE BLOCK TERRITORY.
STEAM ROAD.

REVISIONS.

5-23-29. D.C. RELAYS FORMERLY D.C. AND NORMALLY DEENERGIZED.

APPROVED: A. H. Rudd

SHEET 13 OF 17

S-884

THE PENNSYLVANIA RAILROAD
STANDARD
CODED TRACK CIRCUITS IN AUTOMATIC TERRITORY

OFFICE OF CHIEF SIGNAL ENGINEER, PHILA., PA., JULY 30, 1928.

NOT TO SCALE

Approved A. H. Rudd Chief Signal Engineer

Approved Chief Engineer

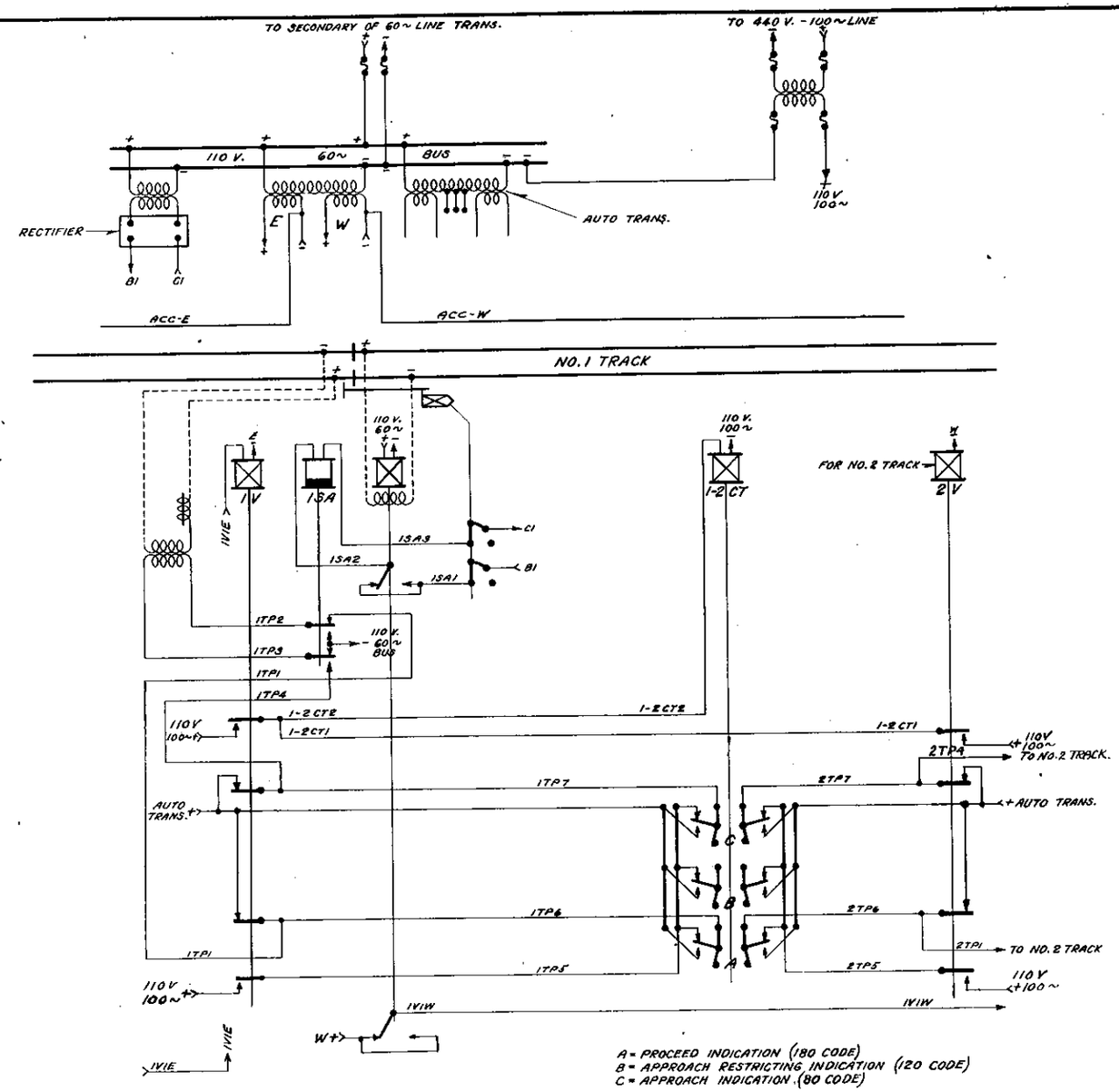

A = PROCEED INDICATION (180 CODE)
B = APPROACH RESTRICTING INDICATION (120 CODE)
C = APPROACH INDICATION (80 CODE)

NOTE :-
1. FOR SIGNAL OPERATING CIRCUITS SEE PLAN S-847, FIG. 2.

"V" RELAYS NORMALLY ENERGIZED.
100 CYCLE CODERS
60 CYCLE TRACK CIRCUIT
100 CYCLE CODE
STEAM ROAD

REVISIONS

S-28 29. "V" RELAYS FORMERLY D.C. AND NORMALLY DEENERGIZED.

APPROVED: A.H. Rudd

SHEET 14 OF 17

S-884

THE PENNSYLVANIA RAILROAD
STANDARD
CODED TRACK CIRCUITS IN AUTOMATIC TERRITORY

OFFICE OF CHIEF SIGNAL ENGINEER, PHILA., PA., JULY 30, 1928.

NOT TO SCALE

Approved A.H. Rudd Chief Signal Engineer

Approved Chief Engineer

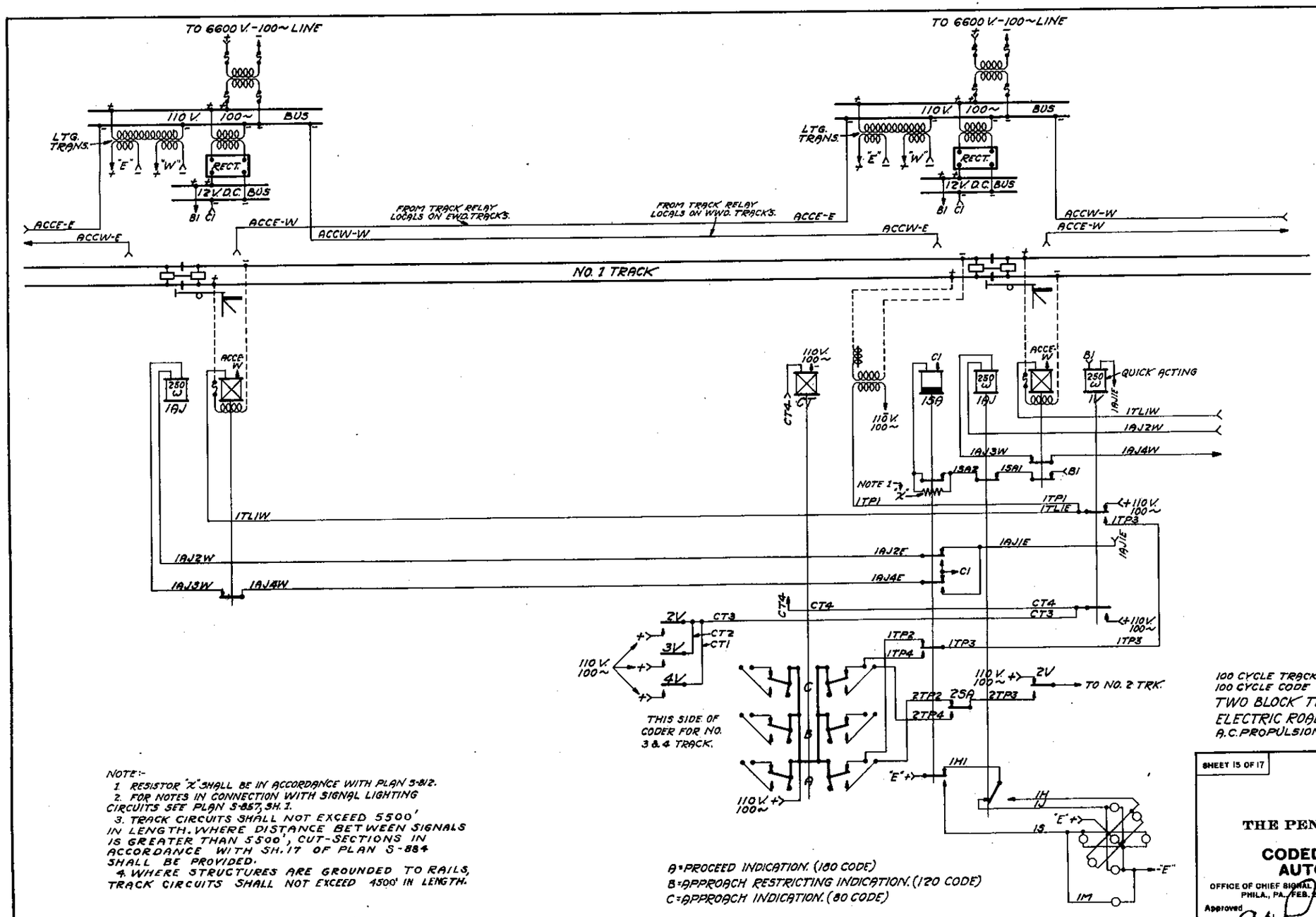

NOTE:-
1. RESISTOR "X" SHALL BE IN ACCORDANCE WITH PLAN S-812.
2. FOR NOTES IN CONNECTION WITH SIGNAL LIGHTING CIRCUITS SEE PLAN S-857, SH. 1.
3. TRACK CIRCUITS SHALL NOT EXCEED 5500' IN LENGTH. WHERE DISTANCE BETWEEN SIGNALS IS GREATER THAN 5500', CUT-SECTIONS IN ACCORDANCE WITH SH. 17 OF PLAN S-884 SHALL BE PROVIDED.
4. WHERE STRUCTURES ARE GROUNDED TO RAILS, TRACK CIRCUITS SHALL NOT EXCEED 4500' IN LENGTH.

A=PROCEED INDICATION. (180 CODE)
B=APPROACH RESTRICTING INDICATION. (120 CODE)
C=APPROACH INDICATION. (80 CODE)

100 CYCLE TRACK CIRCUIT
100 CYCLE CODE
TWO BLOCK TERRITORY
ELECTRIC ROAD
A.C. PROPULSION

REVISIONS

5-23-29. NOTES 3 & 4 ADDED.
APPROVED. A.H. Rudd
C.E.C. / W.M.A. / S.H.G.

SHEET 15 OF 17

S-884

THE PENNSYLVANIA RAILROAD
STANDARD
CODED TRACK CIRCUITS IN AUTOMATIC TERRITORY

OFFICE OF CHIEF SIGNAL ENGINEER, PHILA., PA., FEB. 28, 1929.

NOT TO SCALE

Approved A.H. Rudd
Chief Signal Engineer

Approved
Chief Engineer

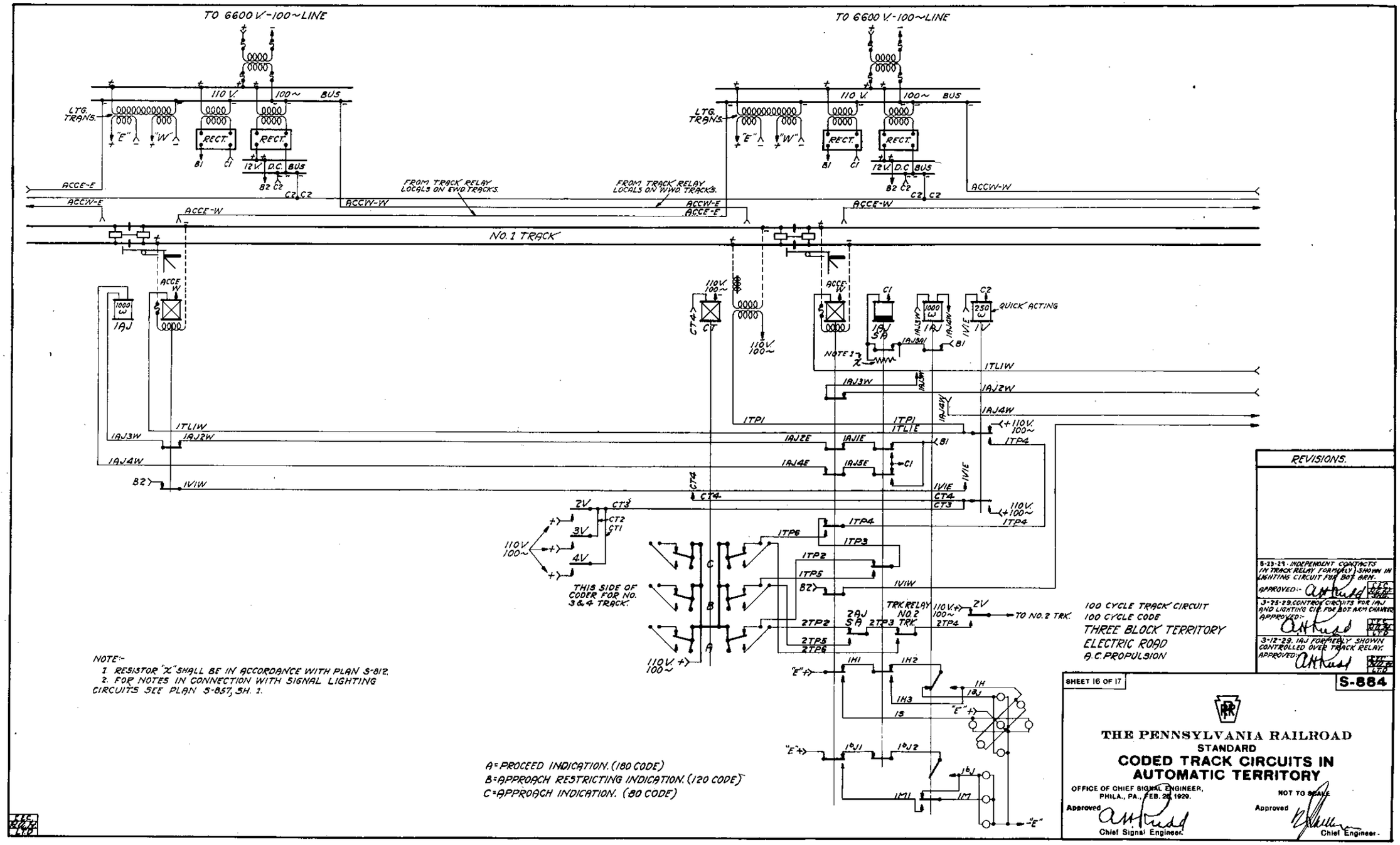
TO 6600 V.-100~ LINE
TO 6600 V.-100~ LINE
110 V. 100~ BUS
LTG. TRANS.
"E" "W"
RECT.
B1 C1
12V. D.C. BUS
B2 C2
ACCE-E
ACCW-E
ACCE-W
ACCW-W
FROM TRACK RELAY LOCALS ON E'WD TRACKS.
FROM TRACK RELAY LOCALS ON W'WD TRACKS.
NO. 1 TRACK
1000 Ω
1AJ
ACCE W
110V. 100~
CT4
CT
C1
C2
250 Ω
QUICK ACTING
1AJ SA
1AJ3A1
1AJ4W
1VIE
1V
NOTE 1
X
1TL1W
1AJ3W
1AJ2W
1AJ4W
1TP1
1TP1
1TL1E
+110V. 100~
1TP4
1AJ2E
1AJ1E
1AJ4E
1AJ5E
B1
C1
B2
1V1W
1V1E
CT4
CT3
2V
CT3
CT2
CT1
3V
4V
110V. 100~
THIS SIDE OF CODER FOR NO. 3 & 4 TRACK.
1TP6
1TP3
1TP2
1TP5
B2
1V1W
TRK RELAY NO. 2 TRK.
2AJ SA
2TP2
2TP3
2TP4
2TP5
2TP6
TO NO. 2 TRK.
1H1
1H2
1H
1HJ
1H3
1S
"E"
1bJ1
1bJ2
1bJ
1M1
1M
A
B
C
A=PROCEED INDICATION. (180 CODE)
B=APPROACH RESTRICTING INDICATION. (120 CODE)
C=APPROACH INDICATION. (80 CODE)
NOTE:-
1. RESISTOR "X" SHALL BE IN ACCORDANCE WITH PLAN S-812.
2. FOR NOTES IN CONNECTION WITH SIGNAL LIGHTING CIRCUITS SEE PLAN S-857, SH. 1.
100 CYCLE TRACK CIRCUIT
100 CYCLE CODE
THREE BLOCK TERRITORY
ELECTRIC ROAD
A.C. PROPULSION
REVISIONS.
8-23-29. INDEPENDENT CONTACTS IN TRACK RELAY FORMERLY SHOWN IN LIGHTING CIRCUIT FOR BOT. ARM.
APPROVED:-
3-25-29. CONTROL CIRCUITS FOR 1AJ AND LIGHTING CIR. FOR BOT. ARM CHANGED
APPROVED:-
3-12-29. 1AJ FORMERLY SHOWN CONTROLLED OVER TRACK RELAY.
APPROVED:-
SHEET 16 OF 17
S-884
THE PENNSYLVANIA RAILROAD
STANDARD
CODED TRACK CIRCUITS IN AUTOMATIC TERRITORY
OFFICE OF CHIEF SIGNAL ENGINEER,
PHILA., PA., FEB. 28, 1929.
NOT TO SCALE
Approved
Chief Signal Engineer.
Approved
Chief Engineer.

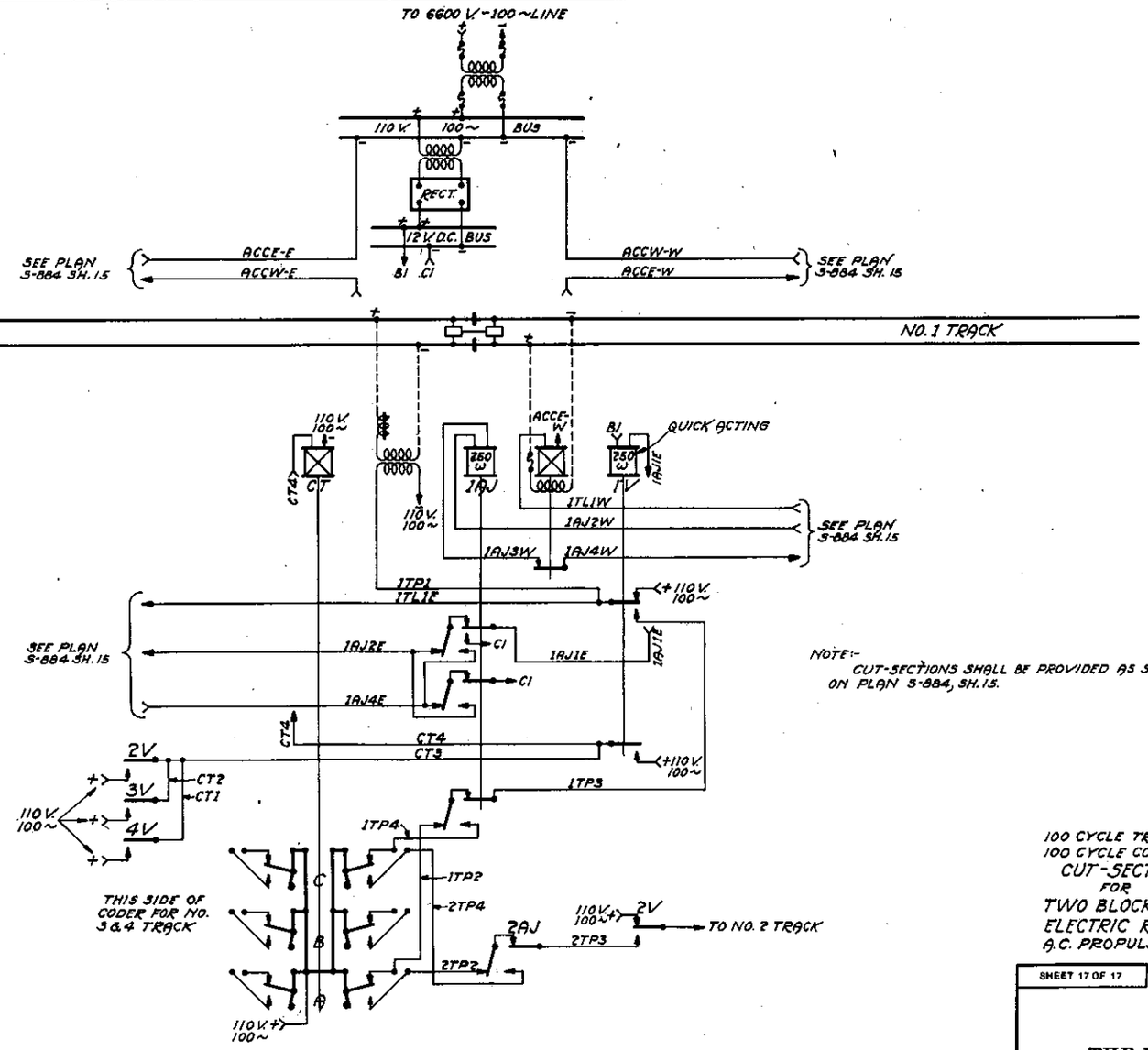

NOTE:-
CUT-SECTIONS SHALL BE PROVIDED AS SPECIFIED ON PLAN S-884, SH. 15.

A = PROCEED INDICATION. (180 CODE)
B = APPROACH RESTRICTING INDICATION. (120 CODE)
C = APPROACH INDICATION. (80. CODE)

REVISIONS.

100 CYCLE TRACK CIRCUIT
100 CYCLE CODE
CUT-SECTION
FOR
TWO BLOCK TERRITORY
ELECTRIC ROAD
A.C. PROPULSION

SHEET 17 OF 17

S-884

THE PENNSYLVANIA RAILROAD
STANDARD
CODED TRACK CIRCUITS IN AUTOMATIC TERRITORY

OFFICE OF CHIEF SIGNAL ENGINEER,
PHILA., PA., MAY 9, 1929.

NOT TO SCALE

Approved
Chief Signal Engineer

Approved
Chief Engineer.

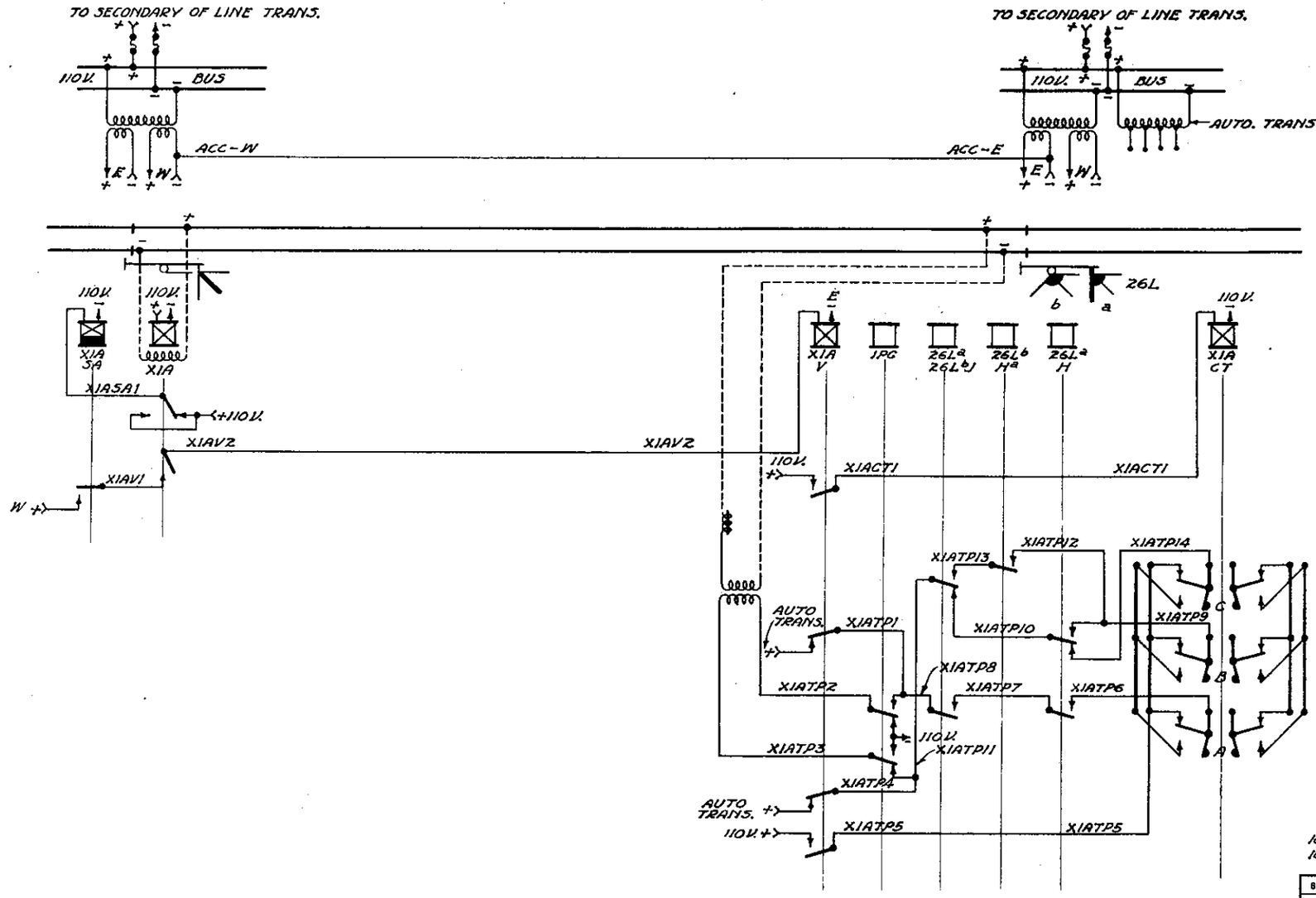

100 CYCLE TRACK CIRCUIT
100 CYCLE CODE

REVISIONS.

SHEET 1 OF 3

S-887

THE PENNSYLVANIA RAILROAD

TYPICAL

CODED TRACK CIRCUITS APPROACHING HOME INTERLOCKING SIGNALS.

OFFICE OF CHIEF SIGNAL ENGINEER, PHILA., PA., NOV. 15, 1920.

NOT TO SCALE

Approved

Chief Signal Engineer

Approved

Chief Engineer

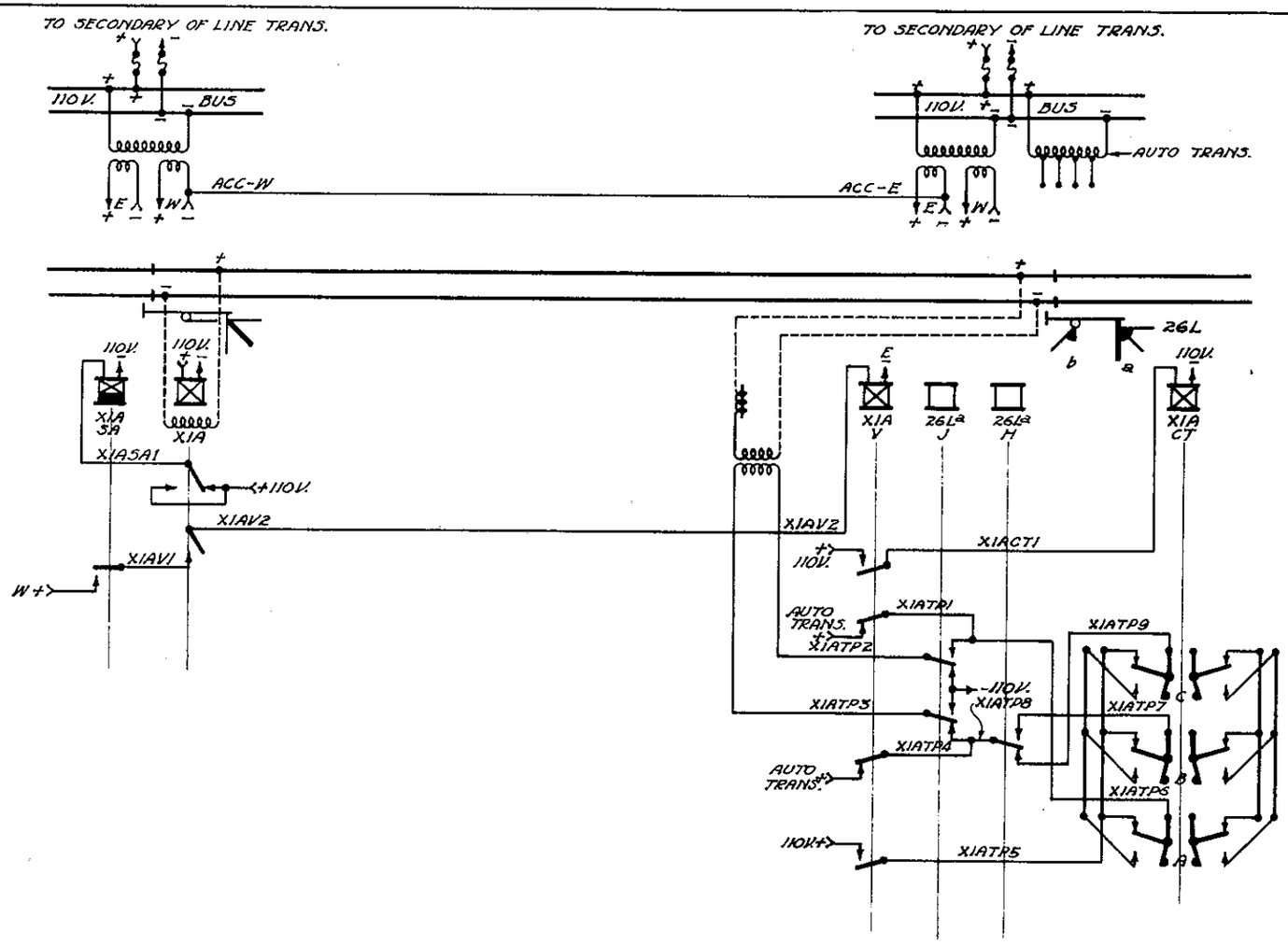

100 CYCLE TRACK CIRCUIT.
100 CYCLE CODE

REVISIONS

SHEET 2 OF 3

S-887

THE PENNSYLVANIA RAILROAD

TYPICAL

CODED TRACK CIRCUITS APPROACHING HOME INTERLOCKING SIGNALS

OFFICE OF CHIEF SIGNAL ENGINEER, PHILA., PA., NOV. 10, 1926

NOT TO SCALE

Approved

Chief Signal Engineer

Approved

Chief Engineer

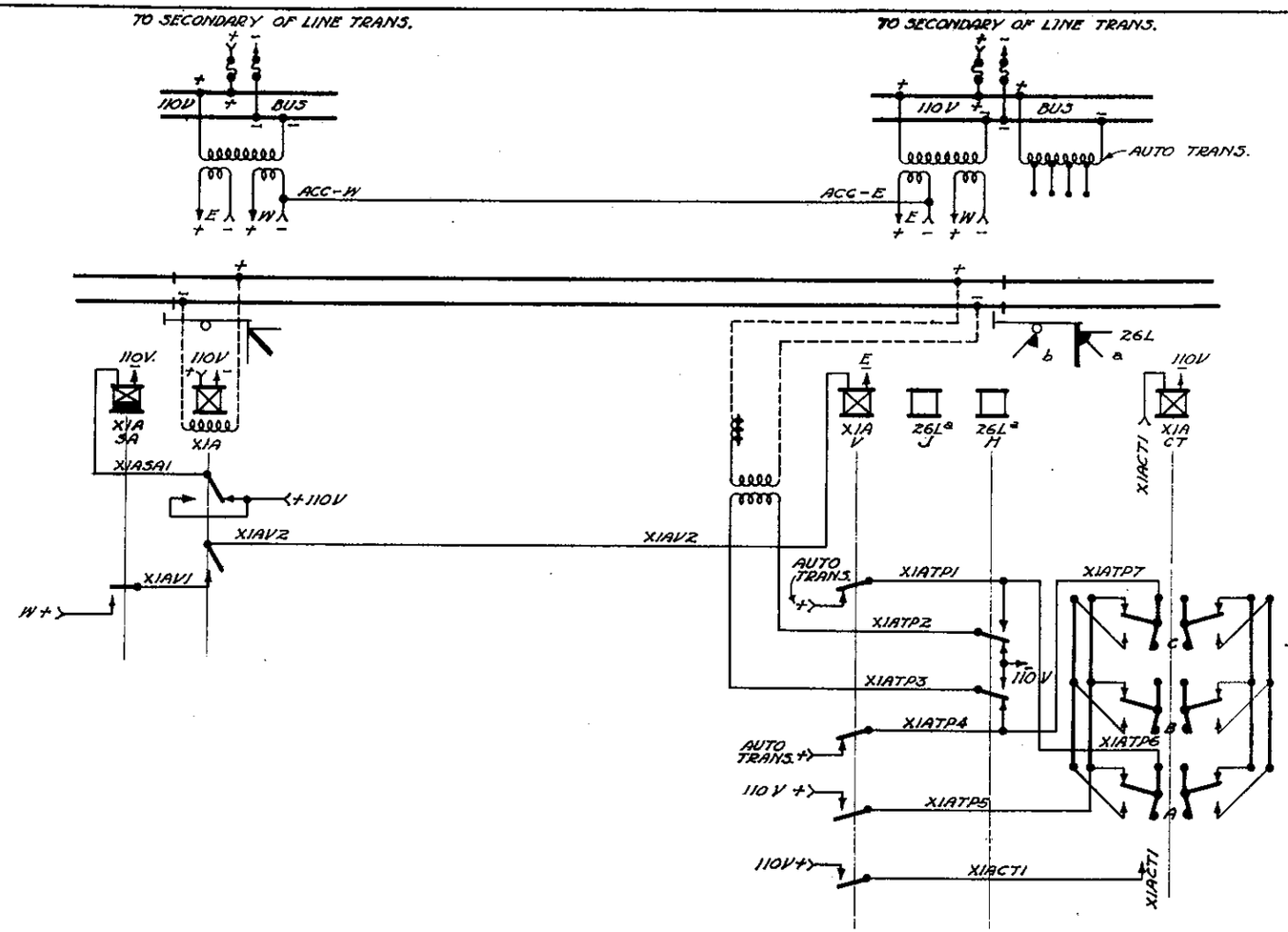

REVISIONS

100 CYCLE TRACK CIRCUIT.
100 CYCLE CODE

SHEET 3 OF 3

S-887

THE PENNSYLVANIA RAILROAD
TYPICAL
CODED TRACK CIRCUITS APPROACHING HOME INTERLOCKING SIGNALS

OFFICE OF CHIEF SIGNAL ENGINEER,
PHILA., PA., NOV. 16, 1926.

NOT TO SCALE

Approved
Chief Signal Engineer

Approved
Chief Engineer

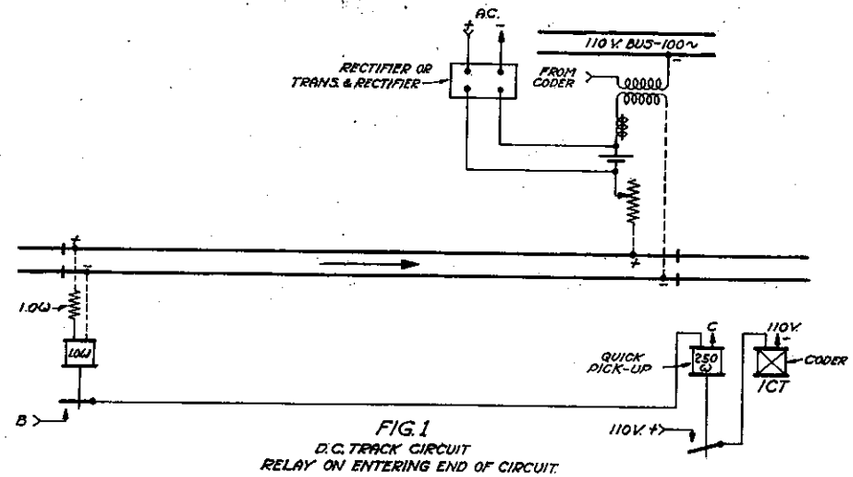

FIG. 1
D.C. TRACK CIRCUIT
RELAY ON ENTERING END OF CIRCUIT.

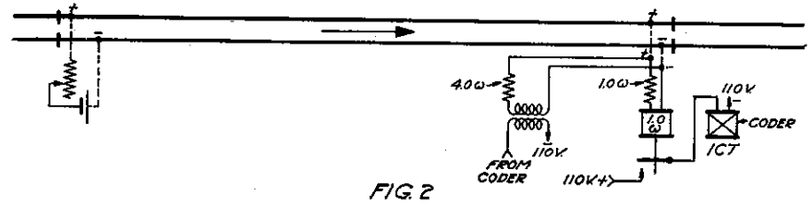

FIG. 2
D.C. TRACK CIRCUIT
RELAY ON LEAVING END OF CIRCUIT.

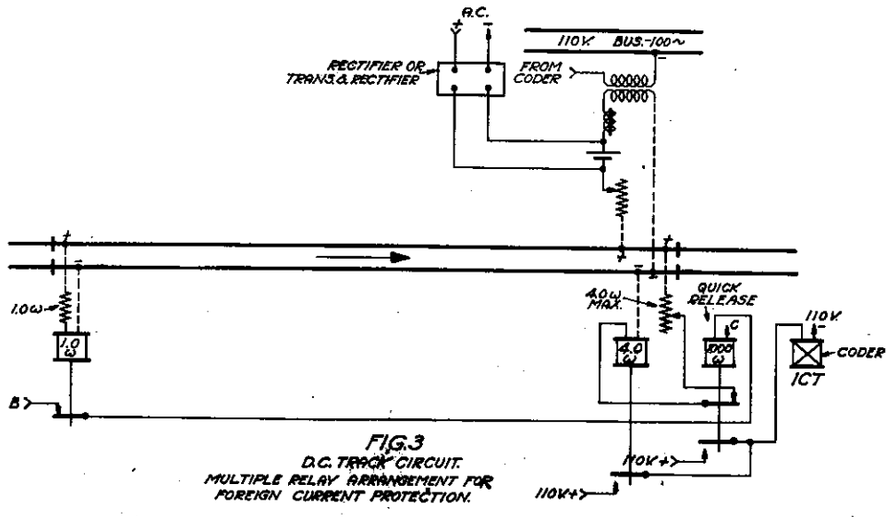

FIG. 3
D.C. TRACK CIRCUIT.
MULTIPLE RELAY ARRANGEMENT FOR FOREIGN CURRENT PROTECTION.

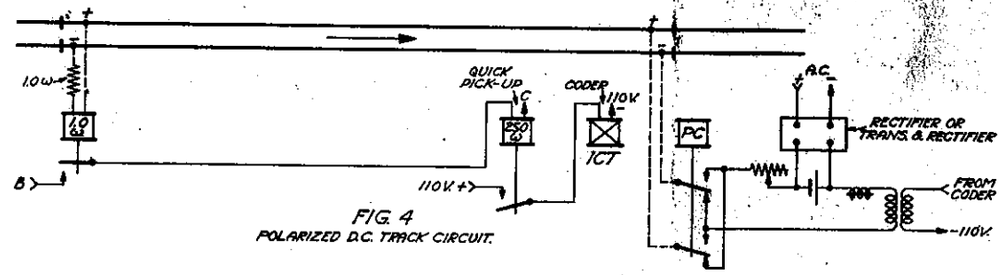

FIG. 4
POLARIZED D.C. TRACK CIRCUIT.

REVISIONS.

1 SHEET

S-888

THE PENNSYLVANIA RAILROAD
TYPICAL
CODED CIRCUITS SUPERIMPOSED ON D. C. TRACK CIRCUITS

OFFICE OF CHIEF SIGNAL ENGINEER
PHILA., PA. APRIL 20, 1928.

NOT TO SCALE

Approved
Chief Signal Engineer

Approved

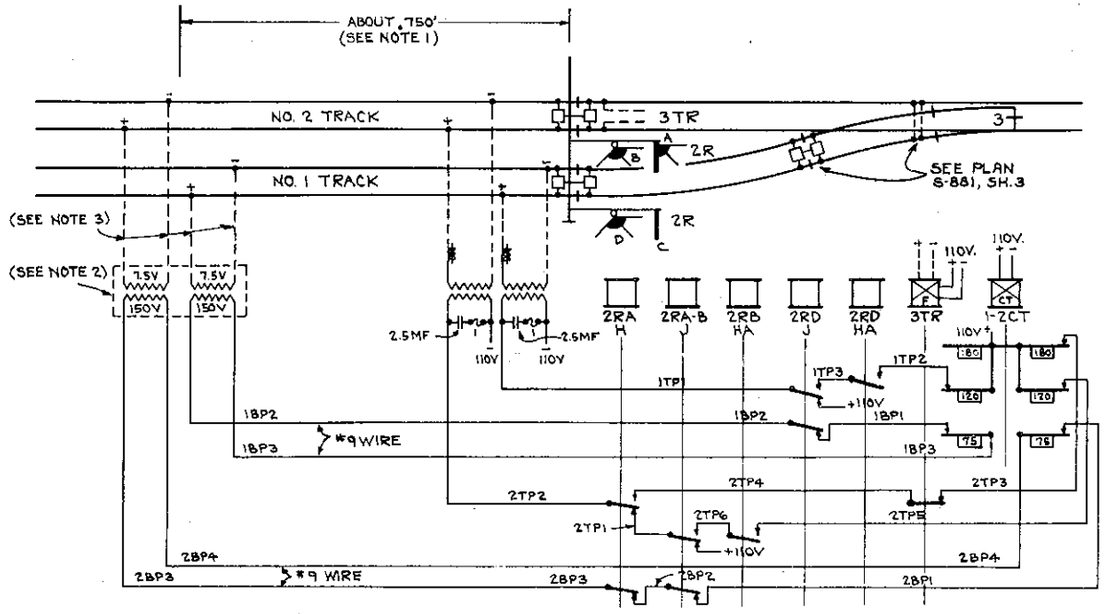

FIG. 1 - ELECTRIC ROAD, UNIVERSAL CODE

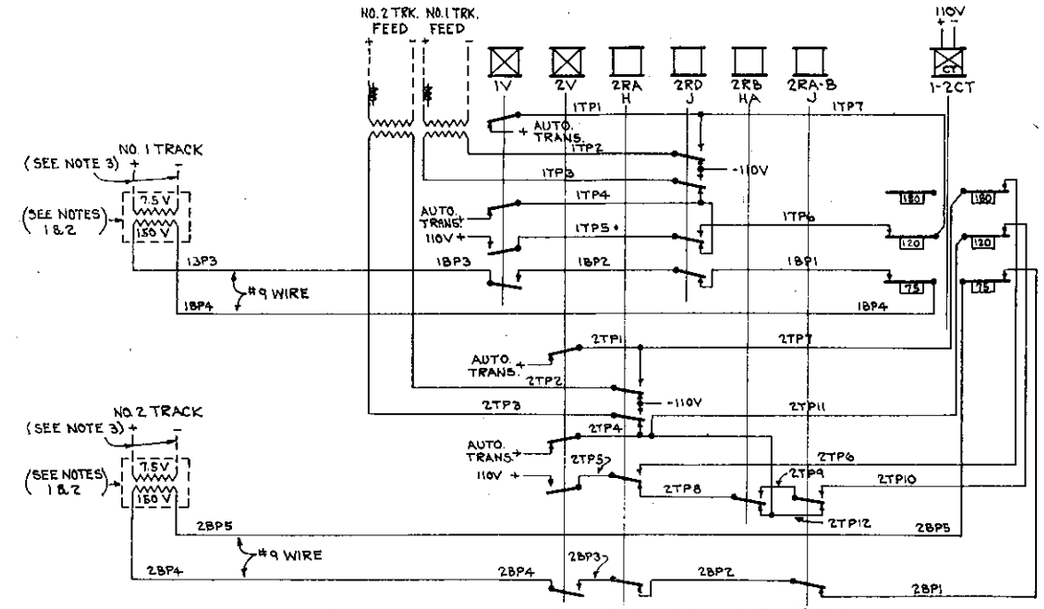

FIG. 3 - STEAM ROAD, A.C. TRACK CIRCUITS

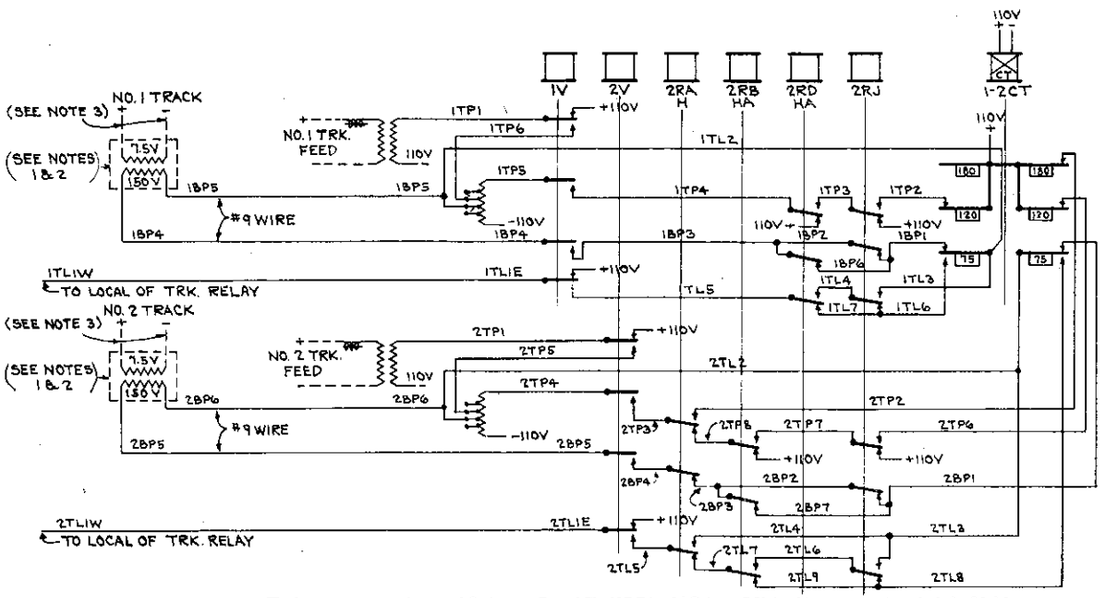

FIG. 2 - ELECTRIC ROAD, CENTRIFUGAL TYPE TRACK RELAYS

BRIDGING TRANSFORMER
A. C. TRACK CIRCUITS

NOTE:-

1. BRIDGING TRANSFORMERS SHALL BE SO LOCATED AND ADJUSTED TO CAUSE CAB SIGNAL TO CHANGE TO RESTRICTING APPROXIMATELY 1000' FROM HOME SIGNAL WHEN IT'S INDICATION IS LESS FAVORABLE THAN APPROACH.
2. W-23 TRANS., PCE. 242552., TO BE USED AS BRIDGING TRANSFORMERS AND TO BE HOUSED IN INSTRUMENT CASE ADJACENT TO TRACK. STORES CAT. REF. 2A-5193.
3. TOTAL LENGTH OF WIRE (+ & - CONNECTIONS) BETWEEN BRIDGING TRANSFORMER AND TRACK SHALL NOT EXCEED 0.014 OHMS - 35' OF #6 WIRE OR 56' OF #4 WIRE. WHERE TOTAL LENGTH OF LEADS EXCEEDS 56', TWO #6 WIRES UP TO 70' OR TWO #4 WIRES UP TO 112' CONNECTED IN MULTIPLE, SHALL BE PROVIDED.

REVISIONS

SHEET 1 OF 2

S-889

THE PENNSYLVANIA RAILROAD

TYPICAL

CODE CHANGE POINT APPROACHING HOME INTERLOCKING SIGNALS

OFFICE OF CHIEF ENGINEER,
PHILA., PA., FEB. 24, 1944.

NOT TO SCALE

APPROVED: H. L. Stanton
ASST. CHIEF ENGINEER-SIGS.

APPROVED: J. Rennie
CHIEF ENGINEER

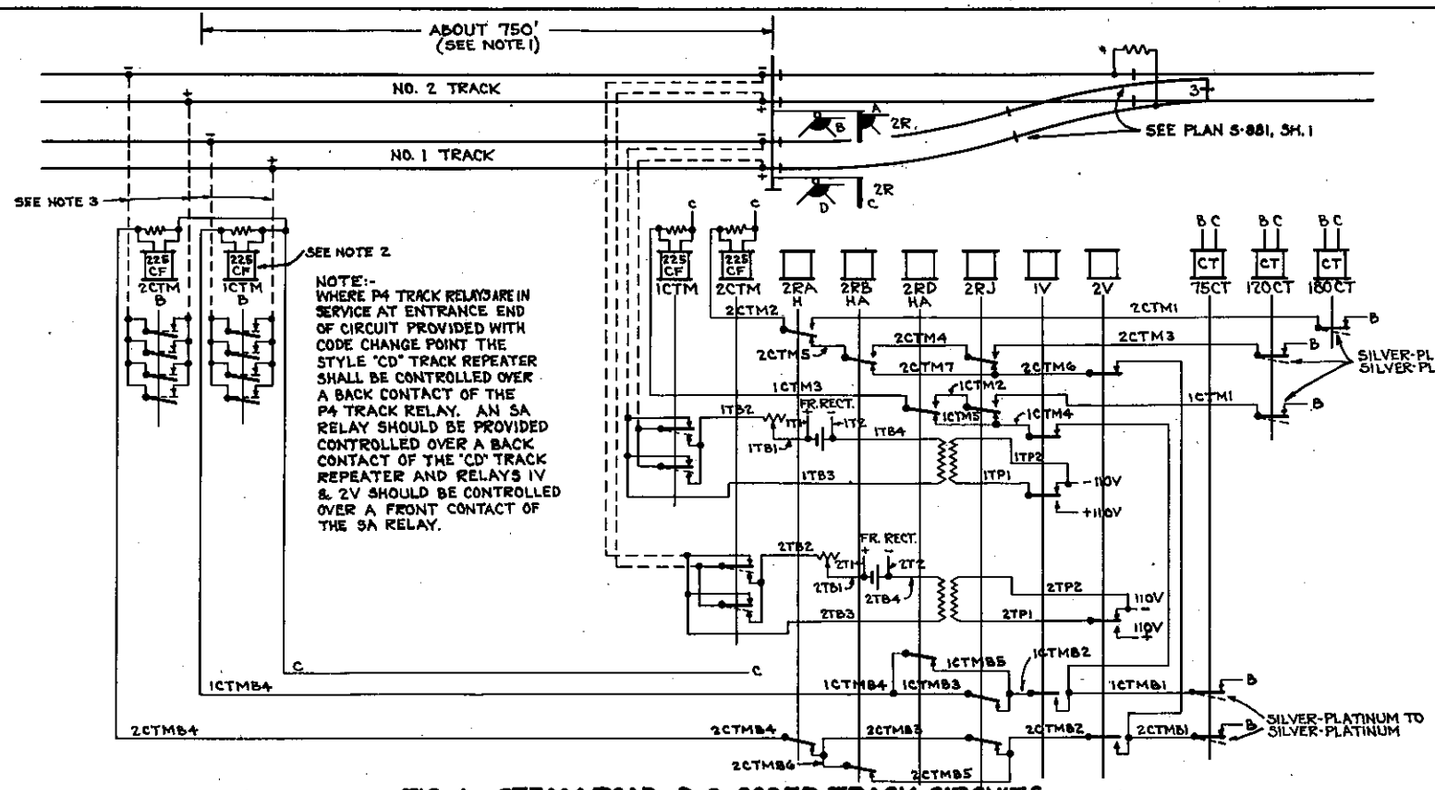

FIG. 4 - STEAM ROAD, D. C. CODED TRACK CIRCUITS

NOTE:-

1.- "CTMB" RELAYS SHALL BE SO LOCATED TO CAUSE CAB SIGNAL TO CHANGE TO RESTRICTING APPROXIMATELY 1000' FROM HOME SIGNAL WHEN IT'S INDICATION IS LESS FAVORABLE THAN APPROACH.

2.- "CTMB" RELAYS SHALL BE STYLE "CD" WITH 4F & 4B NON-INDEPENDENT SILVER-PLATINUM TO SILVER-PLATINUM CONTACTS, PCE. NO. 216174, STORES CAT. REF. 2A-4214, WITH 750 OHM SNUB RESISTOR, U.S. & S. CO. PCE. NO. 239903, STORES CAT. REF. 2A-2021.

3.- TOTAL LENGTH OF WIRE BETWEEN "CTMB" RELAY AND TRACK (+ & - CONNECTIONS) SHALL NOT EXCEED 0.014 OHMS - 35' OF #6 WIRE OR 56' OF #4 WIRE. WHERE TOTAL LENGTH OF LEADS EXCEEDS 56', TWO #6 WIRES UP TO 70' OR TWO #4 WIRES UP TO 112', CONNECTED IN MULTIPLE, SHALL BE PROVIDED.

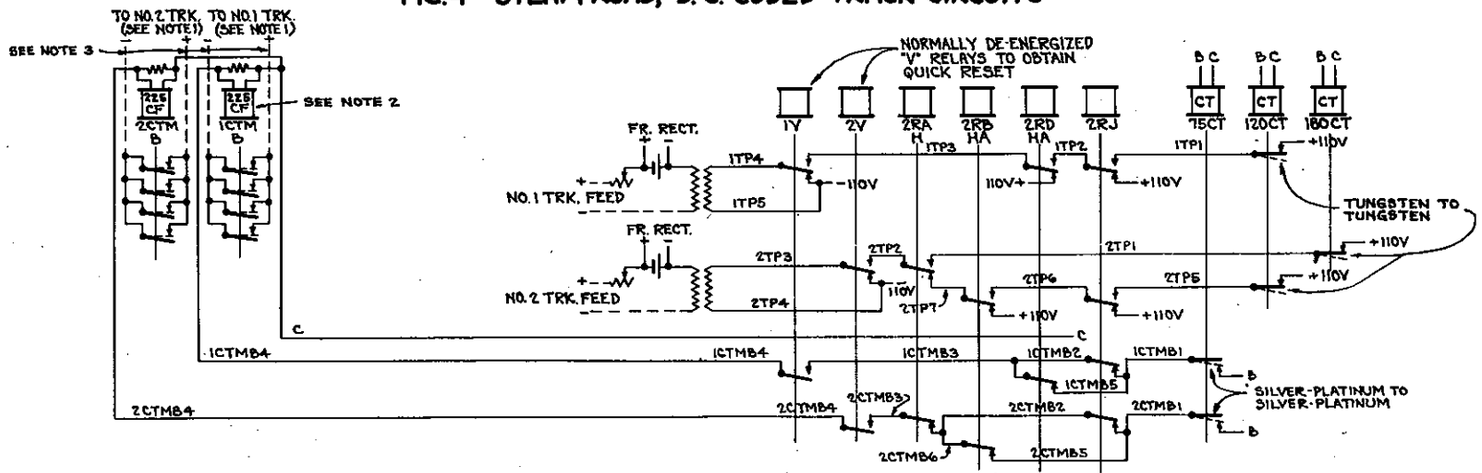

FIG. 5 - STEAM ROAD, D.C. NEUTRAL TRACK CIRCUITS

CODE FOLLOWING RELAY
D.C. TRACK CIRCUITS

REVISIONS

MAY 8, 1947.
FIG. 4 CHANGED. FORMERLY FRONT CONTACT CODING.
APPROVED:
H. C. Griffith

SHEET 2 OF 2

S-889

THE PENNSYLVANIA RAILROAD

TYPICAL
CODE CHANGE POINT APPROACHING HOME INTERLOCKING SIGNALS

OFFICE OF CHIEF ENGINEER,
PHILA., PA., FEB. 24, 1944.

NOT TO SCALE

APPROVED:
N. L. Stanton
ASST. CHIEF ENGINEER-SIGS.

APPROVED:
CHIEF ENGINEER

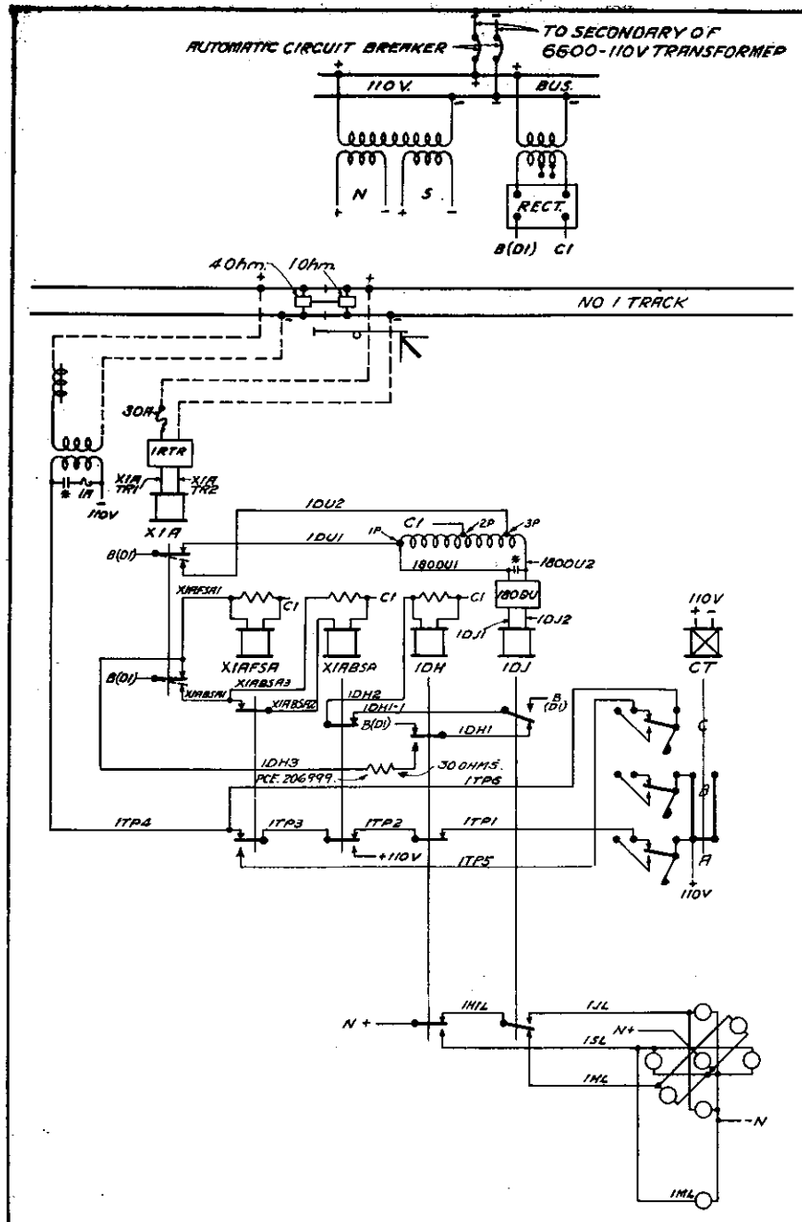

FIG. 1

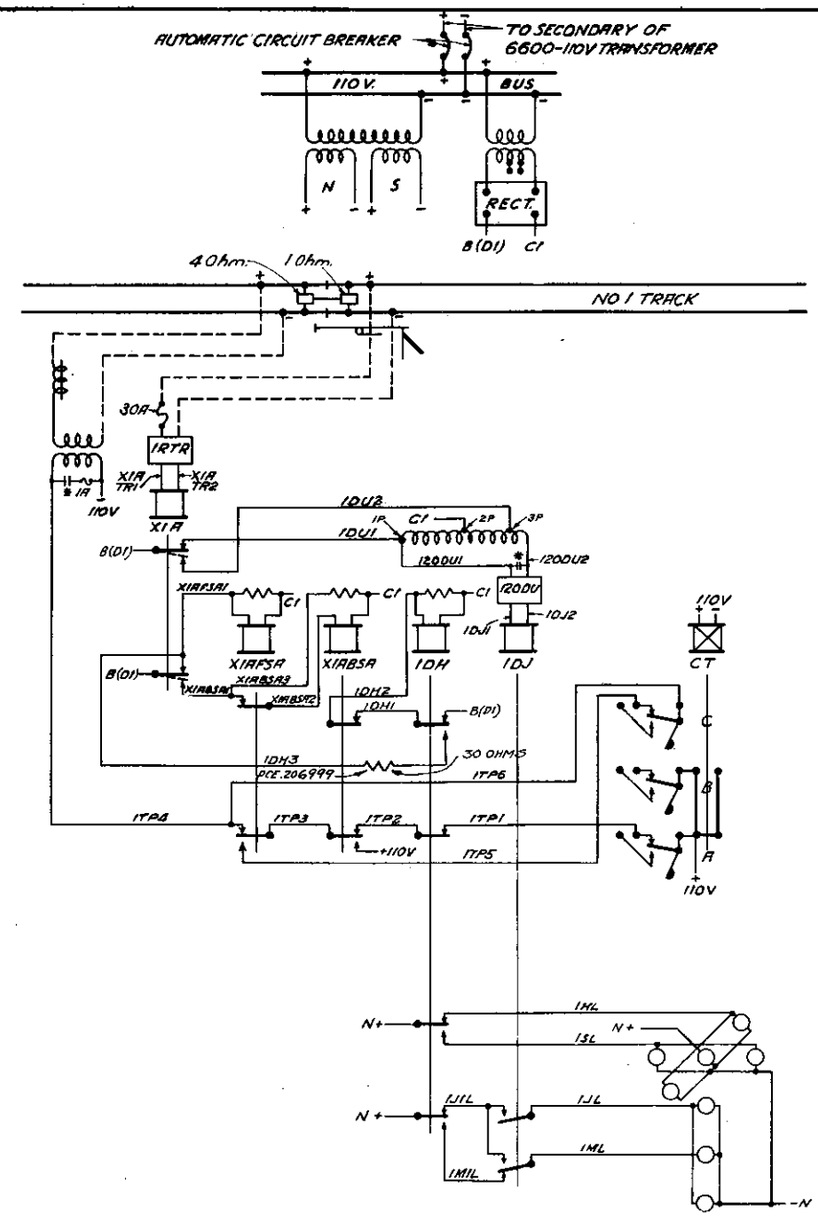

FIG. 2

NOTES-

1 FOR NOTES IN CONNECTION WITH SIGNAL LIGHTING CIRCUITS, SEE PLAN S-857 SHEET 1

2 TRACK CIRCUITS SHALL NOT EXCEED 6000' IN LENGTH. WHERE DISTANCE BETWEEN SIGNALS IS GREATER THAN 6000' CUT SECTIONS IN ACCORDANCE WITH FIG.1 OR FIG.2 SHEET 1 OF PLAN S-894 SHALL BE PROVIDED.

3 WHERE STRUCTURES ARE GROUNDED TO RAILS TRACK CIRCUITS SHALL NOT EXCEED 4500' IN LENGTH

	MAXIMUM FRONT & BACK CONTACTS OF RELAY		TYPE OF RELAY	RESISTANCE OF RELAY	RESISTANCE OF SNUB	PIECE NUMBER OF RELAY
F5A	2F	2B	UNION-DN22	60 OHMS	120 OHMS	188686
	4F	4B	UNION-DN11	100 OHMS	120 OHMS	188774
	6F	6B	UNION-DN11	60 OHMS	50 OHMS	189933
H	4F	4B	UNION-DN11	100 OHMS	50 OHMS	188687
	6F	4B	UNION-DN11	100 OHMS	50 OHMS	188847
J	2F	2B	UNION-DN22	55 OHMS	No SNUB	188770
	4F	4B	UNION-DN11	55 OHMS	No SNUB	188688
	6F	4B	UNION-DN11	55 OHMS	No SNUB	188698
B5A	2F	2B	UNION-DN22	60 OHMS	200 OHMS	206943
	4F	4B	UNION-DN11	100 OHMS	200 OHMS	206944
	6F	6B	UNION-DN11	60 OHMS	80 OHMS	206945

A = PROCEED INDICATION (180 CODE)
B = APPROACH RESTRICTING INDICATION (120 CODE)
C = APPROACH INDICATION (75 CODE)

* = SPARK ARRESTER (2.5 MF CONDENSER).

APPROVED FOR PRINTING
ELECTRICAL ENGINEER
DATE DEC. 2 1933
BY

TWO BLOCK TERRITORY

100 CYCLE CODE
ELECTRIFIED ROAD
AC PROPULSION

REVISIONS

MAR 6, 1937. LOCKOUT FEATURE CHANGED. U.S.&S.C. LETTER OF 2-10-37
APPROVED: A.H. Rudd
March 1, 1935
Spark arresters added.
Oct. 22, 1934.
Lockout feature changed per U.S.&S.Co. letters dated 6-2-34 & 8-20-34

SHEET 1 OF 3

S-893

THE PENNSYLVANIA RAILROAD
STANDARD
CODED TRACK CIRCUITS APPROACHING
DISTANT INTERLOCKING SIGNAL
UNIVERSAL CODE

OFFICE OF ELECTRICAL ENGINEER
PHILADELPHIA PA, MARCH 27, 1934.
NOT TO SCALE

APPROVED — ELECTRICAL ENGINEER
APPROVED — CHIEF SIGNAL ENGINEER
APPROVED — CHIEF ENGINEER

G.B.
A.T.P.
H.J.F.

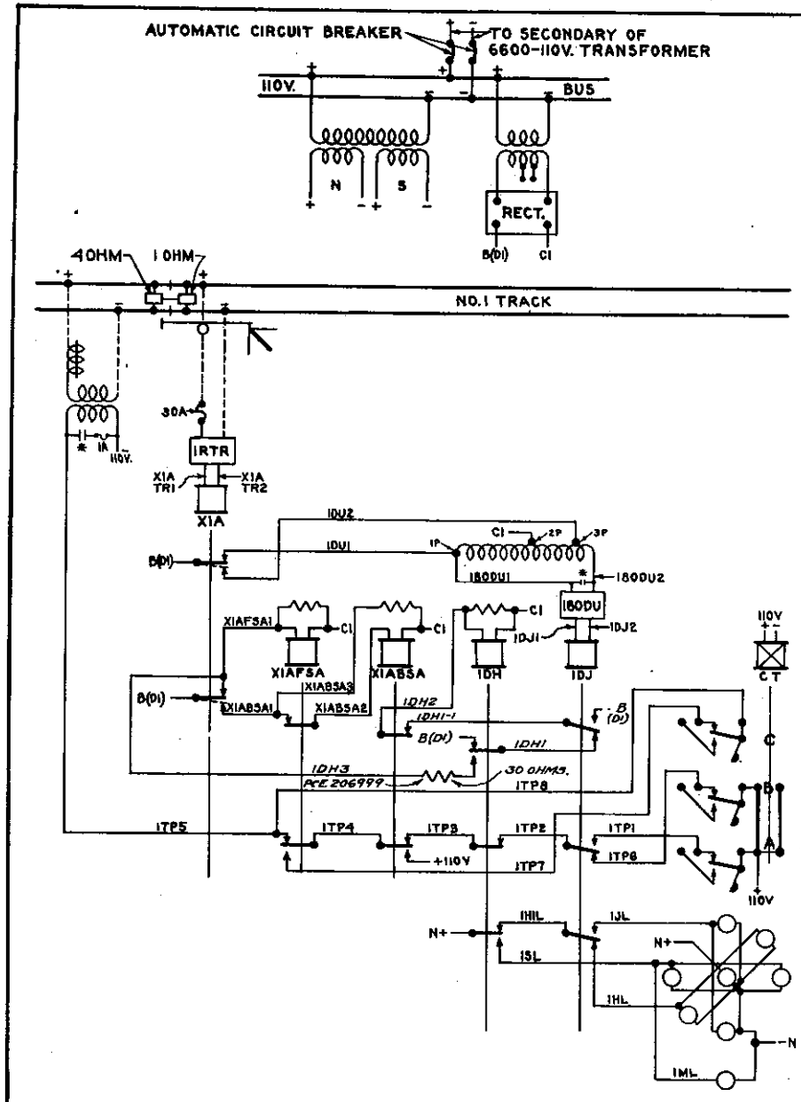

FIG. 3

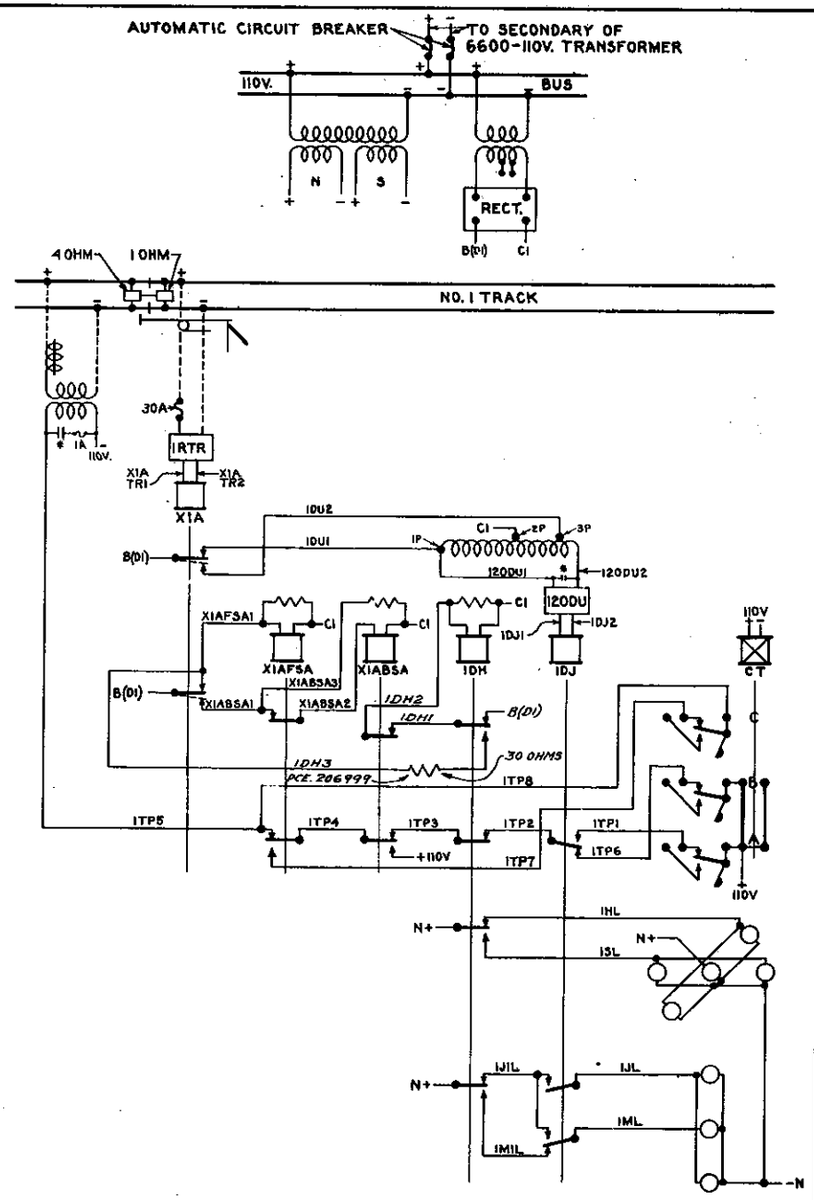

FIG. 4

NOTES:

1. FOR NOTES IN CONNECTION WITH SIGNAL LIGHTING CIRCUITS, SEE PLAN S-887, SHEET 1.
2. TRACK CIRCUITS SHALL NOT EXCEED 6000' IN LENGTH. WHERE DISTANCE BETWEEN SIGNALS IS GREATER THAN 6000' CUT SECTIONS IN ACCORDANCE WITH FIG. 1 OR FIG. 2 SHEET 1 OF PLAN S-894 SHALL BE PROVIDED.
3. WHERE STRUCTURES ARE GROUNDED TO RAILS, TRACK CIRCUITS SHALL NOT EXCEED 4500' IN LENGTH.

	MAXIMUM FRONT & BACK CONTACTS OF RELAY		TYPE OF RELAY	RESISTANCE OF RELAY	RESISTANCE OF SHUB	PIECE NUMBER OF RELAY
FSA	2F	2B	UNION-DN22	60 OHMS	120 OHMS	188686
	4F	4B	UNION-DN11	100 OHMS	120 OHMS	188774
	6F	6B	UNION-DN11	60 OHMS	50 OHMS	189933
H	4F	4B	UNION-DN11	100 OHMS	50 OHMS	188687
	6F	4B	UNION-DN11	100 OHMS	50 OHMS	188847
J	2F	2B	UNION-DN22	55 OHMS	NO SHUB	188770
	4F	4B	UNION-DN11	55 OHMS	NO SHUB	188688
	6F	4B	UNION-DN11	55 OHMS	NO SHUB	188698
BSA	2F	2B	UNION-DN22	60 OHMS	200 OHMS	206943
	4F	4B	UNION-DN11	100 OHMS	200 OHMS	206944
	6F	6B	UNION-DN11	60 OHMS	80 OHMS	206945

A=PROCEED INDICATION (180 CODE)
B=APPROACH RESTRICTING INDICATION (120 CODE)
C=APPROACH INDICATION (75 CODE)

*= SPARK ARRESTER (2.5 MF CONDENSER).

APPROVED FOR P. R. R. P. W. A. ELECTRIFICATION AGREEMENT DATED DEC. 20th, 1933
GIBBS & HILL, ENGINEER
BY

THREE BLOCK TO TWO BLOCK TERRITORY

100 CYCLE CODE
ELECTRIC ROAD
A.C. PROPULSION

REVISIONS

MARCH, 1937. LOCKOUT FEATURE CHANGED - U.S.B.S.C. LETTER 2-10-37.
APPROVED:- A.H. Rudd
March 1, 1935 — Spark arresters added.
Oct. 28, 1934. — Lockout feature changed per U.S.B.&S.Co. letters dated 6-2-34 & 8-20-34.

Sheet 2 of 3

S-893

THE PENNSYLVANIA RAILROAD
STANDARD
CODED TRACK CIRCUITS APPROACHING DISTANT INTERLOCKING SIGNAL UNIVERSAL CODE

OFFICE OF ELECTRICAL ENGINEER
PHILADELPHIA, PA., MARCH 27, 1934.
APPROVED:- APPROVED: APPROVED:
ELECTRICAL ENGINEER — CHIEF SIGNAL ENGINEER — CHIEF ENGINEER

J.B.
A.F.P.
A.E.M.

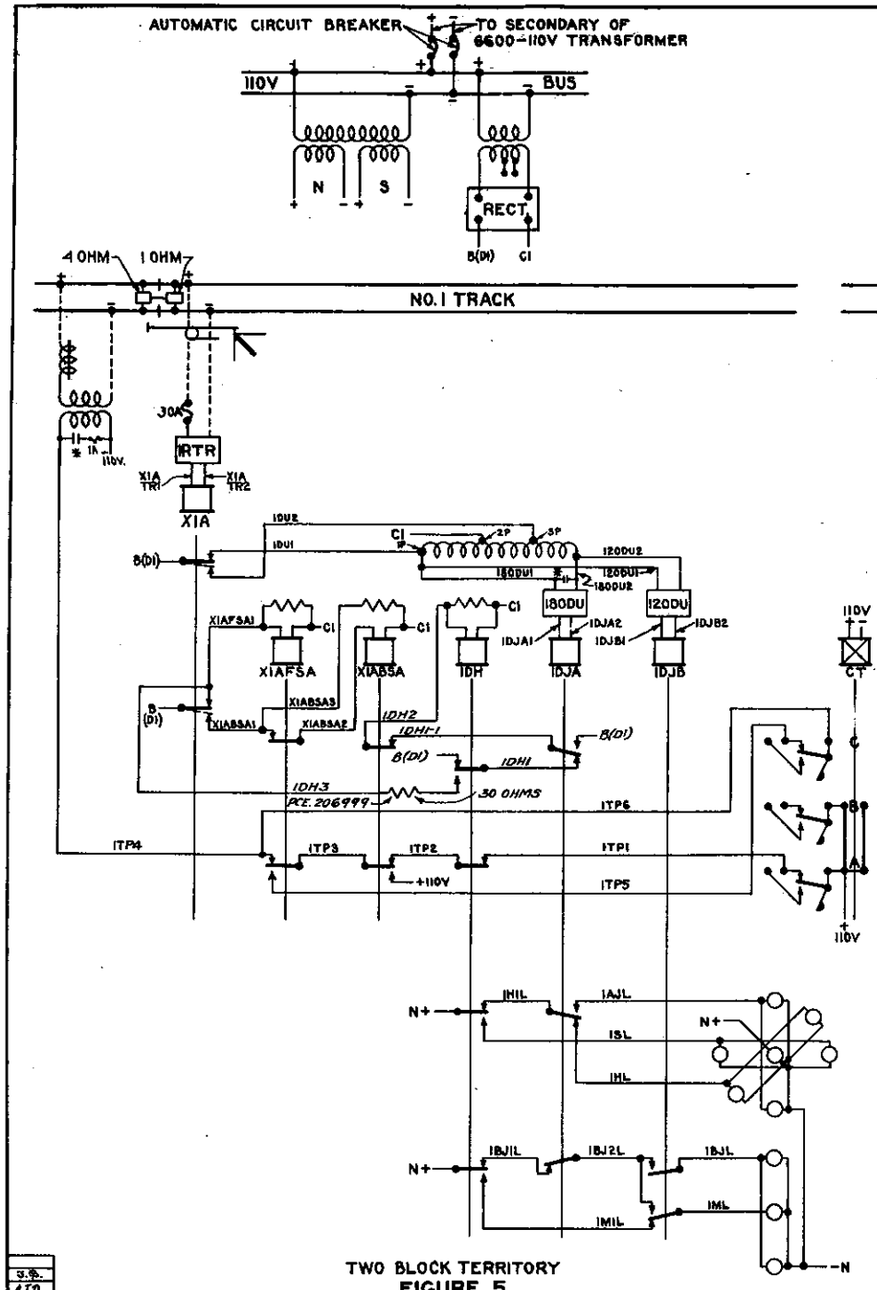

TWO BLOCK TERRITORY
FIGURE 5

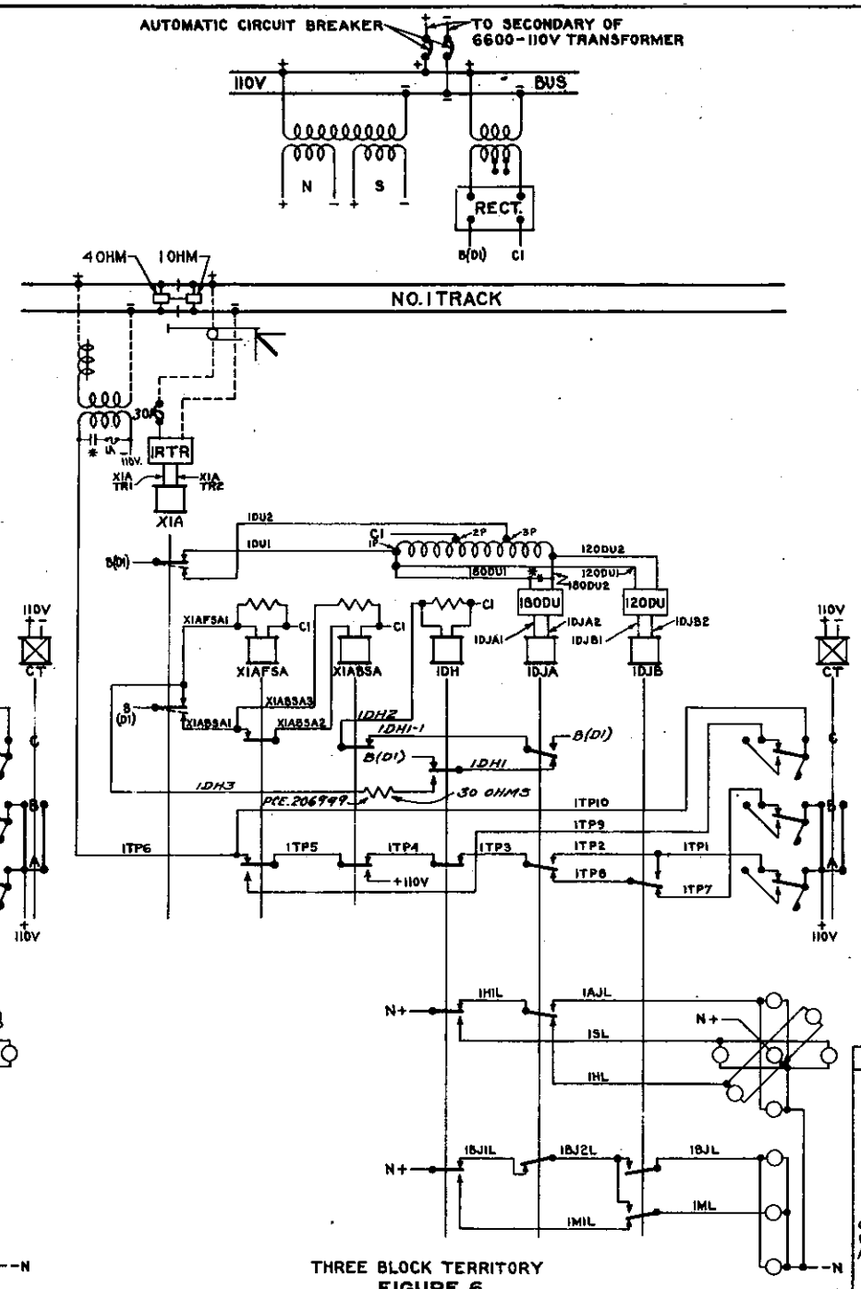

THREE BLOCK TERRITORY
FIGURE 6

NOTES:

1. FOR NOTES IN CONNECTION WITH SIGNAL LIGHTING CIRCUITS, SEE PLAN S-857, SHEET 1.
2. TRACK CIRCUITS SHALL NOT EXCEED 6000' IN LENGTH. WHERE DISTANCE BETWEEN SIGNALS IS GREATER THAN 6000' CUT SECTIONS IN ACCORDANCE WITH FIG.1 OR FIG.2 SHEET 1 OF PLAN S-894 SHALL BE PROVIDED.
3. WHERE STRUCTURES ARE GROUNDED TO RAILS, TRACK CIRCUITS SHALL NOT EXCEED 4500' IN LENGTH.

	MAXIMUM FRONT & BACK CONTACTS OF RELAY		TYPE OF RELAY	RESISTANCE OF RELAY	RESISTANCE OF SNUB	PIECE NUMBER OF RELAY
FSA	2F	2B	UNION-DN22	60 OHMS	120 OHMS	188686
	4F	4B	UNION-DN11	100 OHMS	120 OHMS	188774
	6F	6B	UNION-DN11	60 OHMS	50. OHMS	189933
H	4F	4B	UNION-DN11	100 OHMS	50 OHMS	188687
	6F	4B	UNION-DN11	100 OHMS	50 OHMS	188847
J	2F	2B	UNION-DN22	55 OHMS	NO SNUB	188770
	4F	4B	UNION-DN11	55 OHMS	NO SNUB	188688
	6F	4B	UNION-DN11	55 OHMS	NO SNUB	188698
BSA	2F	2B	UNION-DN22	60 OHMS	200 OHMS	206943
	4F	4B	UNION-DN11	100 OHMS	200 OHMS	206944
	6F	6B	UNION-DN11	60 OHMS	80 OHMS	206945

A=PROCEED INDICATION (180 CODE)
B=APPROACH RESTRICTING INDICATION (120 CODE)
C=APPROACH INDICATION (75 CODE)

* = SPARK ARRESTER (2.5 MF CONDENSER).

100 CYCLE CODE
ELECTRIC ROAD
A.C. PROPULSION

REVISIONS

MAR. 6, 1937. LOCKOUT FEATURE CHANGED. U.S.A.S.C. LETTER 2-10-37.
APPROVED: A.H. Rudd
April 29, 1935 RLA S.B. JHE
1DJB checked in lockout circuit.
March 1, 1935 G.H.M. J.S.
Spark arresters added.
Oct. 23, 1934 G.H.M. J.S.B. MAY
Lockout feature changed per U.S.A.S.C. letters 3C-12C 6-2-34 & 8-20-34.

Sheet 3 of 3

S-893

THE PENNSYLVANIA RAILROAD
STANDARD
CODED TRACK CIRCUITS APPROACHING DISTANT INTERLOCKING SIGNAL UNIVERSAL CODE

OFFICE OF ELECTRICAL ENGINEER
PHILADELPHIA, PA., MARCH 27, 1934.
APPROVED:- APPROVED: APPROVED:
ELECTRICAL ENGINEER CHIEF SIGNAL ENGINEER CHIEF ENGINEER

G.B.
A.J.D.
A.E.M.

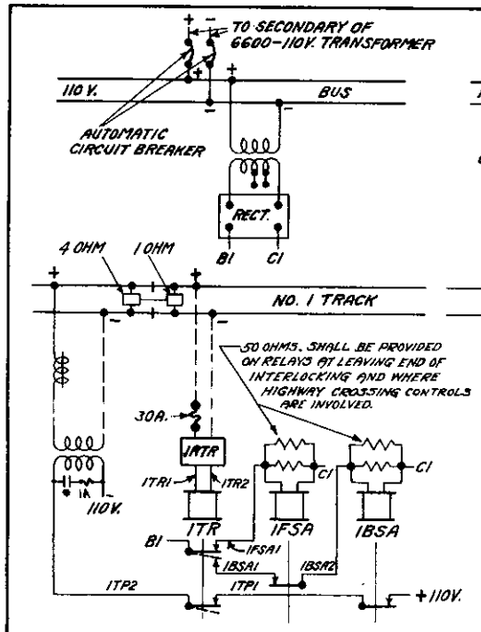

FIG. 1

CUT SECTION

SHALL BE PROVIDED WHERE APPROACH LOCKING OR HIGHWAY CROSSING CONTROL STARTS AT THIS POINT.

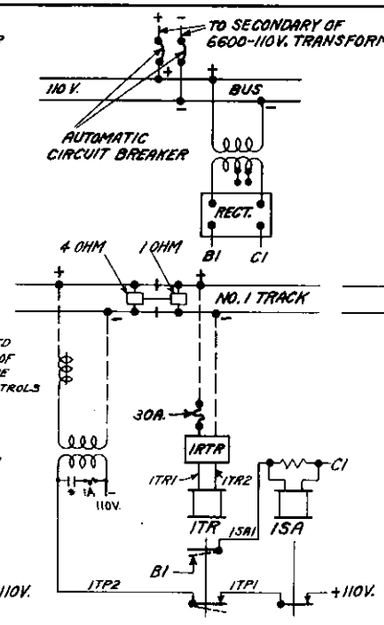

FIG. 2

CUT SECTION

SHALL BE PROVIDED AS SPECIFIED IN NOTES. (ALSO SEE FIG. 4).

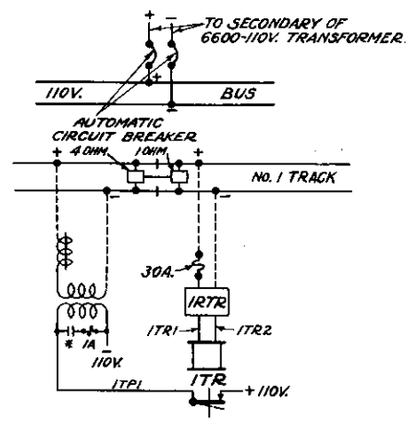

FIG. 4

CUT SECTION

SHALL BE PROVIDED AS SPECIFIED IN NOTES.
(SHALL BE USED FOR ALL CUT-SECTIONS BETWEEN LEAVING END OF INTERLOCKING AND NEXT SIGNAL EXCEPT WHERE FIG. 1 IS REQUIRED).

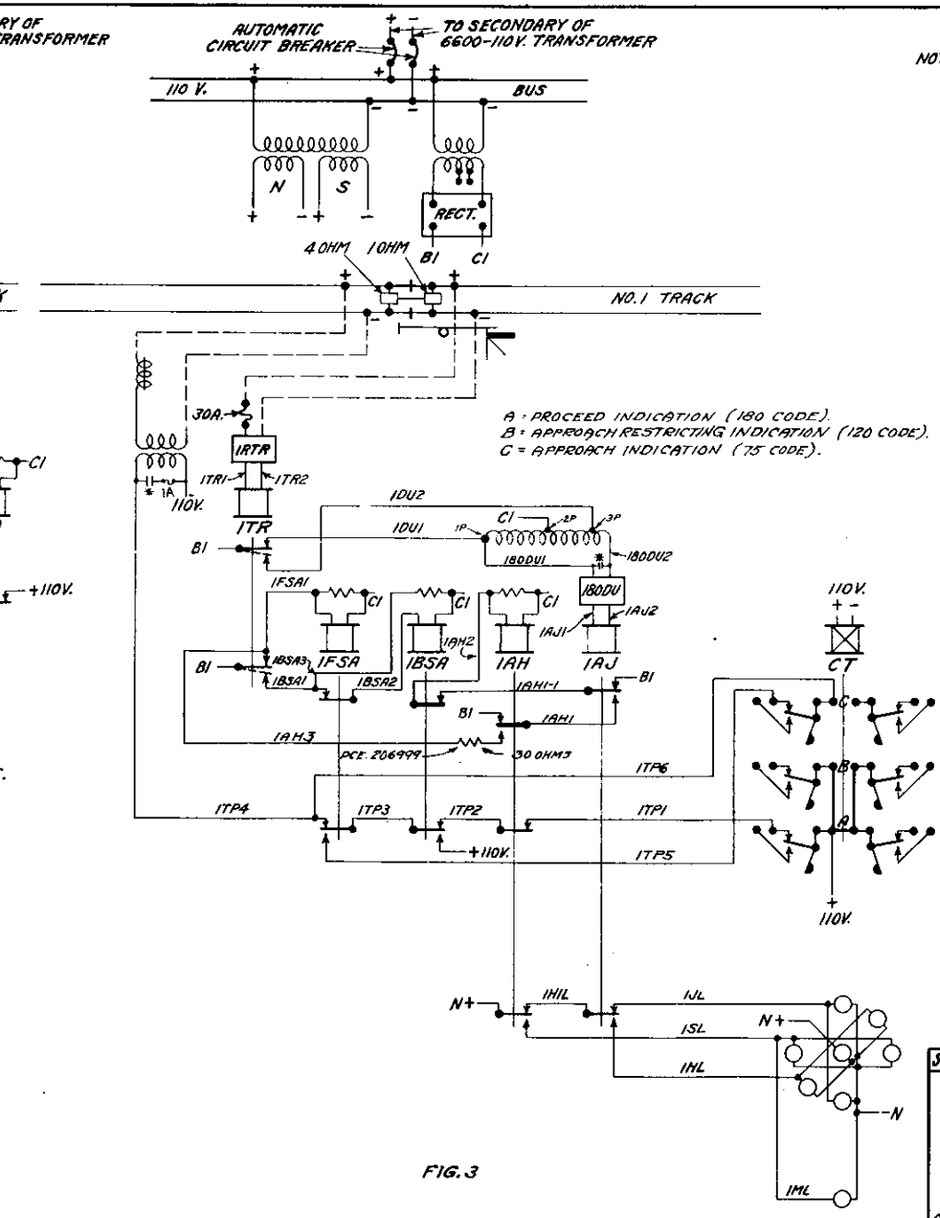

A = PROCEED INDICATION (180 CODE).
B = APPROACH RESTRICTING INDICATION (120 CODE).
C = APPROACH INDICATION (75 CODE).

FIG. 3

NOTES:-

1. FOR NOTES IN CONNECTION WITH SIGNAL LIGHTING CIRCUITS, SEE PLAN S-857 SHEET 1.
2. TRACK CIRCUITS SHALL NOT EXCEED 6000' IN LENGTH. WHERE DISTANCE BETWEEN SIGNALS IS GREATER THAN 6000' FIG. 2 SHALL BE PROVIDED FOR ONE CUT SECTION AND FIG. 4 FOR ANY ADDITIONAL CUT SECTIONS, EXCEPT WHERE FIG. 1 IS NECESSARY.
3. WHERE STRUCTURES ARE GROUNDED TO RAILS, TRACK CIRCUITS SHALL NOT EXCEED 4500' IN LENGTH.

	MAXIMUM FRONT & BACK CONTACTS OF RELAY		TYPE OF RELAY	RESISTANCE OF RELAY	RESISTANCE OF SNUB	PIECE NUMBER OF RELAY
SA EXCEPT BSA FIG. 3	2F	2B	UNION-DN22	60 OHMS	120 OHMS	188686
	4F	4B	UNION-DN11	100 OHMS	120 OHMS	188774
	6F	6B	UNION-DN11	60 OHMS	50 OHMS	189733
H	4F	4B	UNION-DN11	100 OHMS	50 OHMS	188687
	6F	4B	UNION-DN11	100 OHMS	50 OHMS	188847
J	2F	2B	UNION-DN22	55 OHMS	NO SNUB	188770
	4F	4B	UNION-DN11	55 OHMS	NO SNUB	188688
	6F	4B	UNION-DN11	55 OHMS	NO SNUB	188698
BSA FIG. 3	2F	2B	UNION-DN22	60 OHMS	200 OHMS	206943
	4F	4B	UNION-DN11	100 OHMS	200 OHMS	206944
	6F	6B	UNION-DN11	60 OHMS	80 OHMS	206945

* = SPARK ARRESTER (2.5 MF CONDENSER)

APPROVED FOR P. R. R. ELECTRIFICATION AGREEMENT DATED DEC. 27TH, 1933
SEBS & HILL, ENGINEERS
By: [illegible]

TWO BLOCK TERRITORY

100 CYCLE CODE
ELECTRIC ROAD
AC PROPULSION

SHEETS 3 & 4 OBSOLETE.

REVISIONS

MAR. 6, 1937. LOCKOUT FEATURE CHANGED - U.S. & S. CO. LETTER 2-10-37
APPROVED: [illegible]
March 1, 1935 — Spark arresters added.
OCT. 23, 1934. LOCKOUT FEATURE CHANGED PER U.S. & S. CO. LETTERS DATED 6-2-34 & 8-20-34.

SHEET 1 OF 6 — S-894

THE PENNSYLVANIA RAILROAD
STANDARD
CODED TRACK CIRCUITS
IN AUTOMATIC TERRITORY
UNIVERSAL CODE

OFFICE OF ELECTRICAL ENGINEER
PHILADELPHIA, PA., MARCH 27, 1934.

NOT TO SCALE

APPROVED:- [illegible] ELECTRICAL ENGINEER
APPROVED:- [illegible] CHIEF SIGNAL ENGINEER
APPROVED:- [illegible] CHIEF ENGINEER

S.A.
D.J.M.
H.E.A.

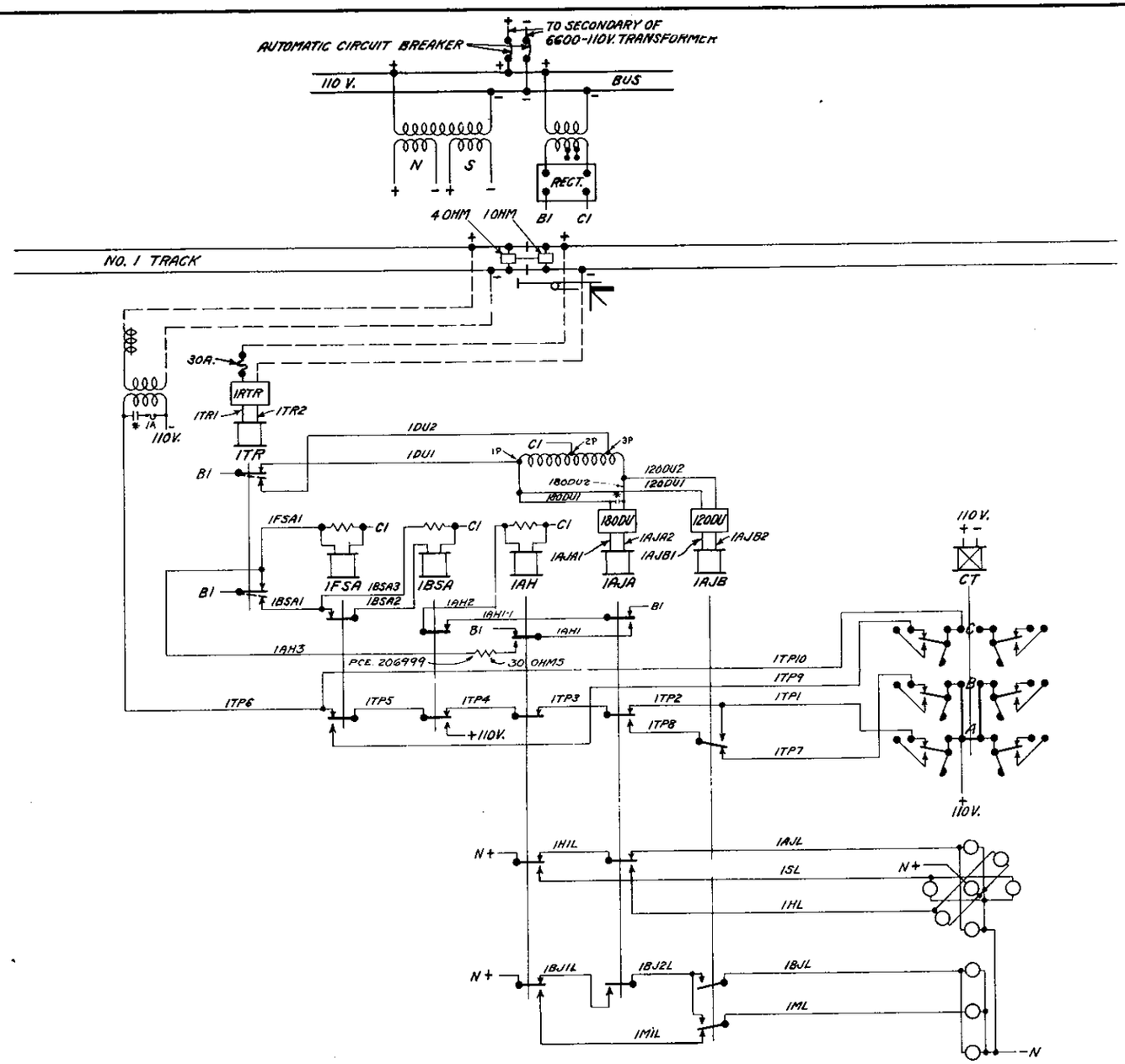

NOTES:-

1. FOR NOTES IN CONNECTION WITH SIGNAL LIGHTING CIRCUITS, SEE PLAN S-857 SHEET 1.
2. TRACK CIRCUITS SHALL NOT EXCEED 6000' IN LENGTH. WHERE DISTANCE BETWEEN SIGNALS IS GREATER THAN 6000' CUT SECTIONS IN ACCORDANCE WITH FIG. 1 OR FIG. 3, SHEET 1 OF PLAN S-894 SHALL BE PROVIDED.
3. WHERE STRUCTURES ARE GROUNDED TO RAILS, TRACK CIRCUITS SHALL NOT EXCEED 4500' IN LENGTH.

	MAXIMUM FRONT & BACK CONTACTS OF RELAY		TYPE OF RELAY	RESISTANCE OF RELAY	RESISTANCE OF SNUB	PIECE NUMBER OF RELAY
FSA	2F	2B	UNION-DN22	60 OHMS	120 OHMS	188686
	4F	4B	UNION-DN11	100 OHMS	120 OHMS	188774
	6F	6B	UNION-DN11	60 OHMS	50 OHMS	189933
H	4F	4B	UNION-DN11	100 OHMS	50 OHMS	188687
	6F	4B	UNION-DN11	100 OHMS	50 OHMS	188847
J	2F	2B	UNION-DN22	56 OHMS	NO SNUB	188770
	4F	4B	UNION-DN11	55 OHMS	NO SNUB	188688
	6F	4B	UNION-DN11	55 OHMS	NO SNUB	188698
BSA	2F	2B	UNION-DN22	60 OHMS	200 OHMS	206943
	4F	4B	UNION-DN11	100 OHMS	200 OHMS	206944
	6F	6B	UNION-DN11	60 OHMS	80 OHMS	206945

A = PROCEED INDICATION (180 CODE)
B = APPROACH RESTRICTING INDICATION (120 CODE)
C = APPROACH INDICATION (75 CODE)

✳ = SPARK ARRESTER (2.5 MF CONDENSER)

APPROVED FOR P. R. R.
RAILROAD COMMISSION
Rd Stamp

THREE BLOCK TERRITORY

100 CYCLE CODE
ELECTRIC ROAD
AC PROPULSION

REVISIONS

MAR. 6, 1937. LOCKOUT FEATURE CHANGED - U.S.&S.C. LETTER of 2-10-37
APPROVED: A. H. Rudd
April 29, 1935 — 1AJB checked in lockout circuit.
March 1, 1935 — Spark arresters added.
OCT. 23, 1934. LOCKOUT FEATURE CHANGED PER U.S.&S.C. LETTERS DATED 6-2-34 & 8-20-34

SHEET 2 OF 6

S-894

THE PENNSYLVANIA RAILROAD
STANDARD
CODED TRACK CIRCUITS
IN AUTOMATIC TERRITORY
UNIVERSAL CODE

OFFICE OF ELECTRICAL ENGINEER
PHILADELPHIA, PA., MARCH 27, 1934.

NOT TO SCALE

APPROVED:- ELECTRICAL ENGINEER
APPROVED:- CHIEF SIGNAL ENGINEER
APPROVED:- C.M.E.F. ENGINEER

S.G.
D.J.M.
H.E.A.

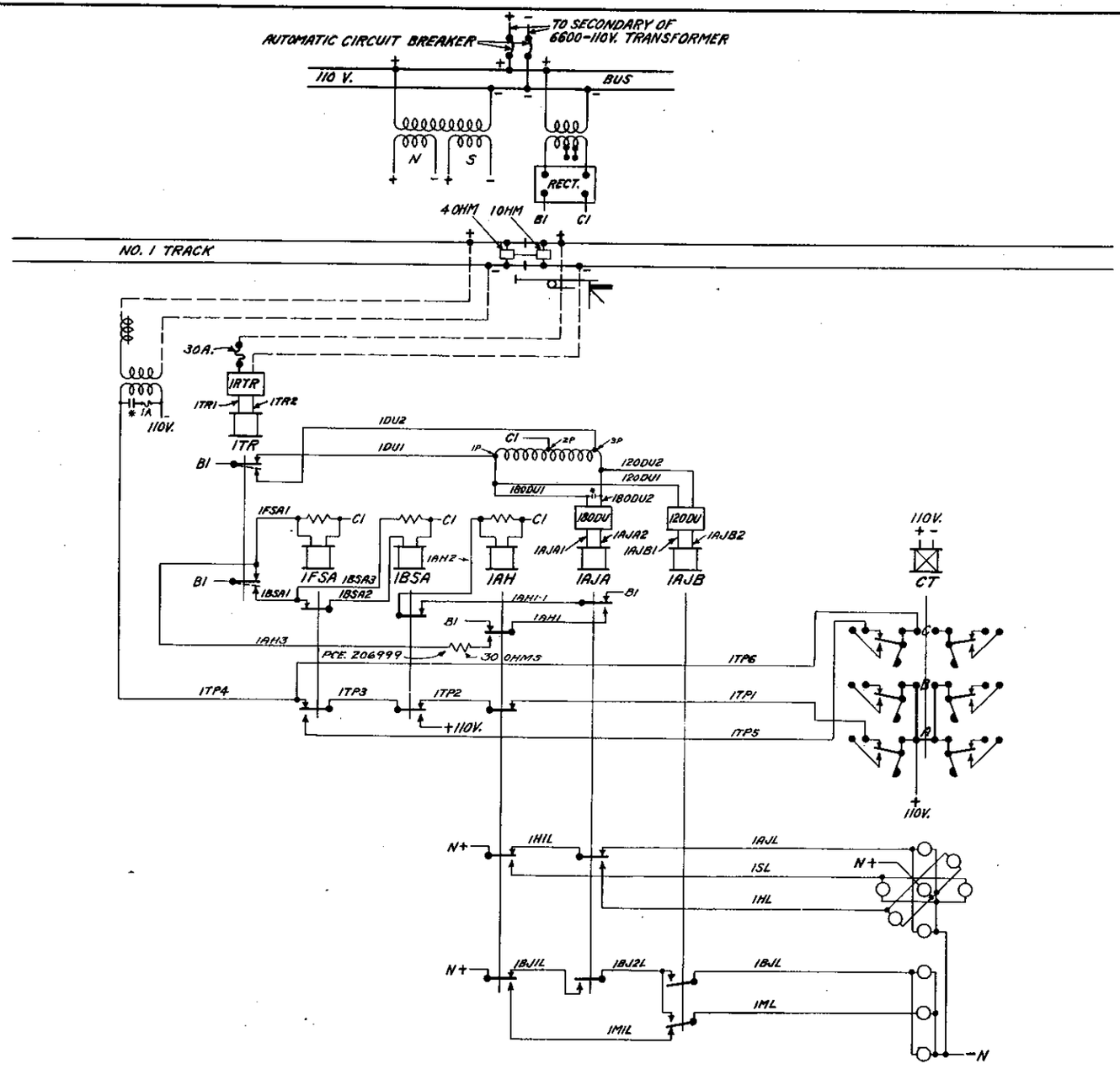

NOTES:-

1. FOR NOTES IN CONNECTION WITH SIGNAL LIGHTING CIRCUITS, SEE PLAN S-857 SHEET 1.
2. TRACK CIRCUITS SHALL NOT EXCEED 6000' IN LENGTH. WHERE DISTANCE BETWEEN SIGNALS IS GREATER THAN 6000' CUT SECTIONS IN ACCORDANCE WITH FIG. 1 OR FIG. 2, SHEET 1 OF PLAN S-894 SHALL BE PROVIDED.
3. WHERE STRUCTURES ARE GROUNDED TO RAILS, TRACK CIRCUITS SHALL NOT EXCEED 4500' IN LENGTH.

	MAXIMUM FRONT & BACK CONTACTS OF RELAY		TYPE OF RELAY	RESISTANCE OF RELAY	RESISTANCE OF SNUB	PIECE NUMBER OF RELAY
FSA	2F	2B	UNION-DN22	60 OHMS	120 OHMS	188686
	4F	4B	UNION-DN11	100 OHMS	120 OHMS	188774
	6F	6B	UNION-DN11	60 OHMS	50 OHMS	189933
H	4F	4B	UNION-DN11	100 OHMS	50 OHMS	188687
	6F	4B	UNION-DN11	100 OHMS	50 OHMS	188947
J	2F	2B	UNION-DN22	55 OHMS	NO SNUB	188770
	4F	4B	UNION-DN11	55 OHMS	NO SNUB	188688
	6F	4B	UNION-DN11	55 OHMS	NO SNUB	188698
BSA	2F	2B	UNION-DN22	60 OHMS	200 OHMS	206943
	4F	4B	UNION-DN11	100 OHMS	200 OHMS	206944
	6F	6B	UNION-DN11	60 OHMS	80 OHMS	206945

A=PROCEED INDICATION (180 CODE)
B=APPROACH RESTRICTING INDICATION (120 CODE)
C=APPROACH INDICATION (75 CODE)

* = SPARK ARRESTER (2.5 MF CONDENSER).

APPROVED FOR P. R. R. - P. W. A. ELECTRIFICATION AGREEMENT DATED DEC. 28th, 1933
GIGGS & HILL, ENGINEERS
BY

TWO BLOCK TO THREE BLOCK TERRITORY

100 CYCLE CODE
ELECTRIC ROAD
A C PROPULSION

REVISIONS

MAR. 6, 1937. LOCKOUT FEATURE CHANGED. U.S.&S.C. LETTER OF 2-10-37. APPROVED:	
April 29, 1935	H.L.G. J.M.R.
1AJB checked in lockout circuit.	
March 1, 1935	
Spark arresters added.	
OCT. 23, 1934. LOCKOUT FEATURE CHANGED PER U.S.&S.CO. LETTERS DATED 6-2-34 & 8-20-34.	

SHEET 5 OF 6

S-894

THE PENNSYLVANIA RAILROAD
STANDARD

CODED TRACK CIRCUITS IN AUTOMATIC TERRITORY UNIVERSAL CODE

OFFICE OF ELECTRICAL ENGINEER
PHILADELPHIA, PA., MARCH 27, 1934.

NOT TO SCALE

APPROVED:- ELECTRICAL ENGINEER
APPROVED:- CHIEF SIGNAL ENGINEER
APPROVED:- CHIEF ENGINEER

H.G.
D.J.M.
H.E.A.

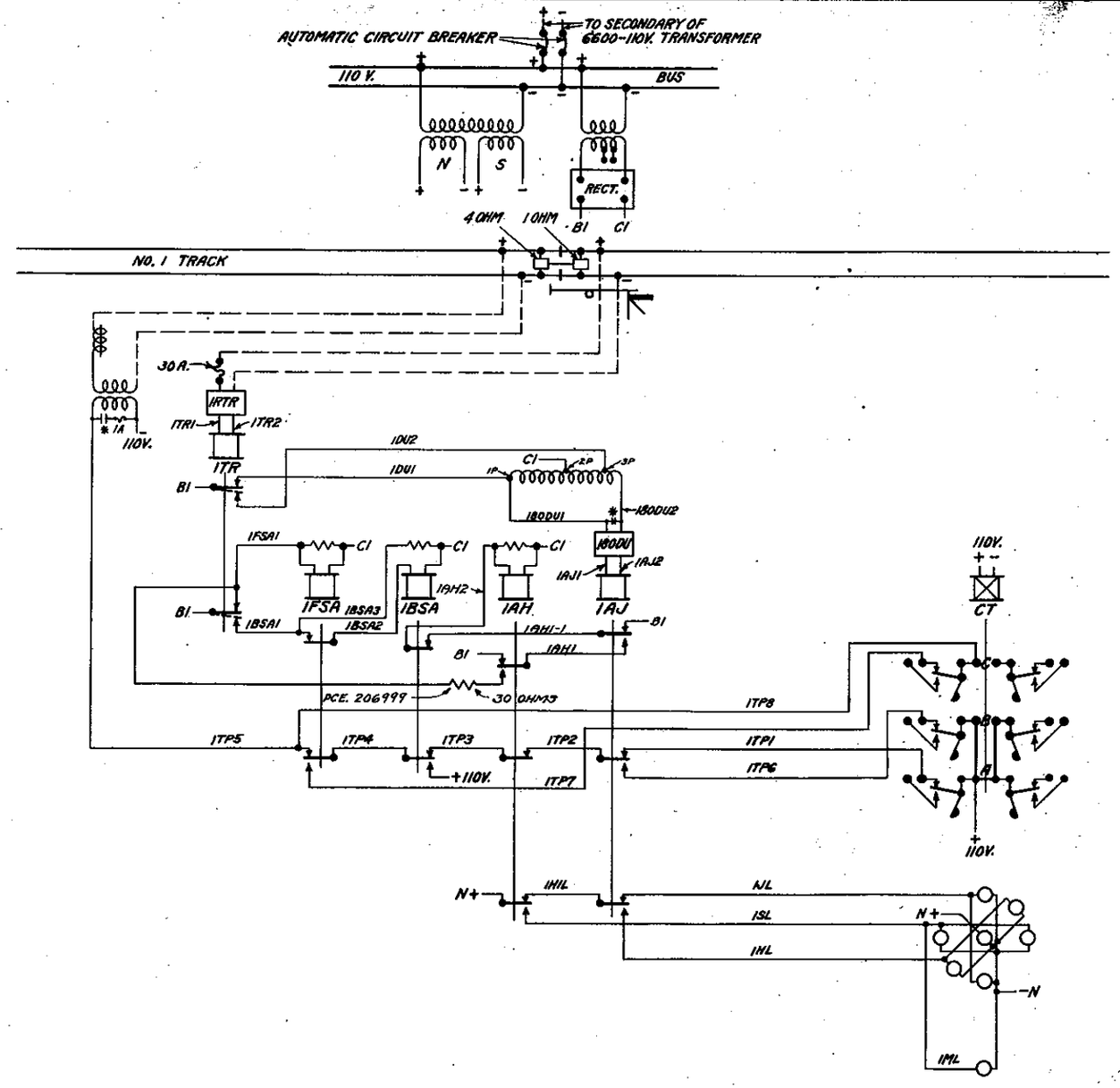

NOTES:-

1. FOR NOTES IN CONNECTION WITH SIGNAL LIGHTING CIRCUITS, SEE PLAN S-857 SHEET 1.
2. TRACK CIRCUITS SHALL NOT EXCEED 6000' IN LENGTH. WHERE DISTANCE BETWEEN SIGNALS IS GREATER THAN 6000' CUT SECTIONS IN ACCORDANCE WITH FIG. 1 OR FIG. 2 SHEET 1 OF PLAN S-894 SHALL BE PROVIDED.
3. WHERE STRUCTURES ARE GROUNDED TO RAILS, TRACK CIRCUITS SHALL NOT EXCEED 4500' IN LENGTH.

	MAXIMUM FRONT & BACK CONTACTS OF RELAY		TYPE OF RELAY	RESISTANCE OF RELAY	RESISTANCE OF SNUB	PIECE NUMBER OF RELAY
FSA	2F	2B	UNION-DN22	60 OHMS	120 OHMS	188686
	4F	4B	UNION-DN11	100 OHMS	120 OHMS	188774
	6F	6B	UNION-DN11	60 OHMS	50 OHMS	189933
H	4F	4B	UNION-DN11	100 OHMS	50 OHMS	188687
	6F	4B	UNION-DN11	100 OHMS	50 OHMS	188847
J	2F	2B	UNION-DN22	55 OHMS	NO SNUB	188770
	4F	4B	UNION-DN11	55 OHMS	NO SNUB	188688
	6F	4B	UNION-DN11	55 OHMS	NO SNUB	188698
BSA	2F	2B	UNION-DN22	60 OHMS	200 OHMS	206943
	4F	4B	UNION-DN11	100 OHMS	200 OHMS	206944
	6F	6B	UNION-DN11	60 OHMS	80 OHMS	206945

A=PROCEED INDICATION (180 CODE)
B=APPROACH RESTRICTING INDICATION (120 CODE)
C=APPROACH INDICATION (75 CODE)

* = SPARK ARRESTER (2.5 MF CONDENSER).

APPROVED FOR P. R. R. [illegible] ELECTRIFICATION AGREEMENT DATED DEC. 28th, 1935
GIBBS & HILL, ENGINEER
BY: [illegible]

THREE BLOCK TO TWO BLOCK TERRITORY

100 CYCLE CODE
ELECTRIC ROAD
AC PROPULSION

REVISIONS

MARC. 1937. LOCKOUT FEATURE CHANGED:- U.S.&S.Co. LETTER OF 2-10-37 APPROVED: [illegible]
March 1, 1936 Spark arrester added.
OCT. 23, 1934. LOCKOUT FEATURE CHANGED PER U.S. & S. CO. LETTERS DATED 6-2-34 & 8-20-34.

SHEET 6 OF 6

S-894

THE PENNSYLVANIA RAILROAD
STANDARD
CODED TRACK CIRCUITS IN AUTOMATIC TERRITORY UNIVERSAL CODE

OFFICE OF ELECTRICAL ENGINEER
PHILADELPHIA, PA., MARCH 27, 1934.

NOT TO SCALE

APPROVED:- [illegible] ELECTRICAL ENGINEER
APPROVED:- [illegible] CHIEF SIGNAL ENGINEER
APPROVED:- [illegible] CHIEF ENGINEER